Oct. 23, 1934. T. C. RICE 1,977,778

TAPPET VALVE CLEARANCE COMPENSATOR

Filed Sept. 3, 1929

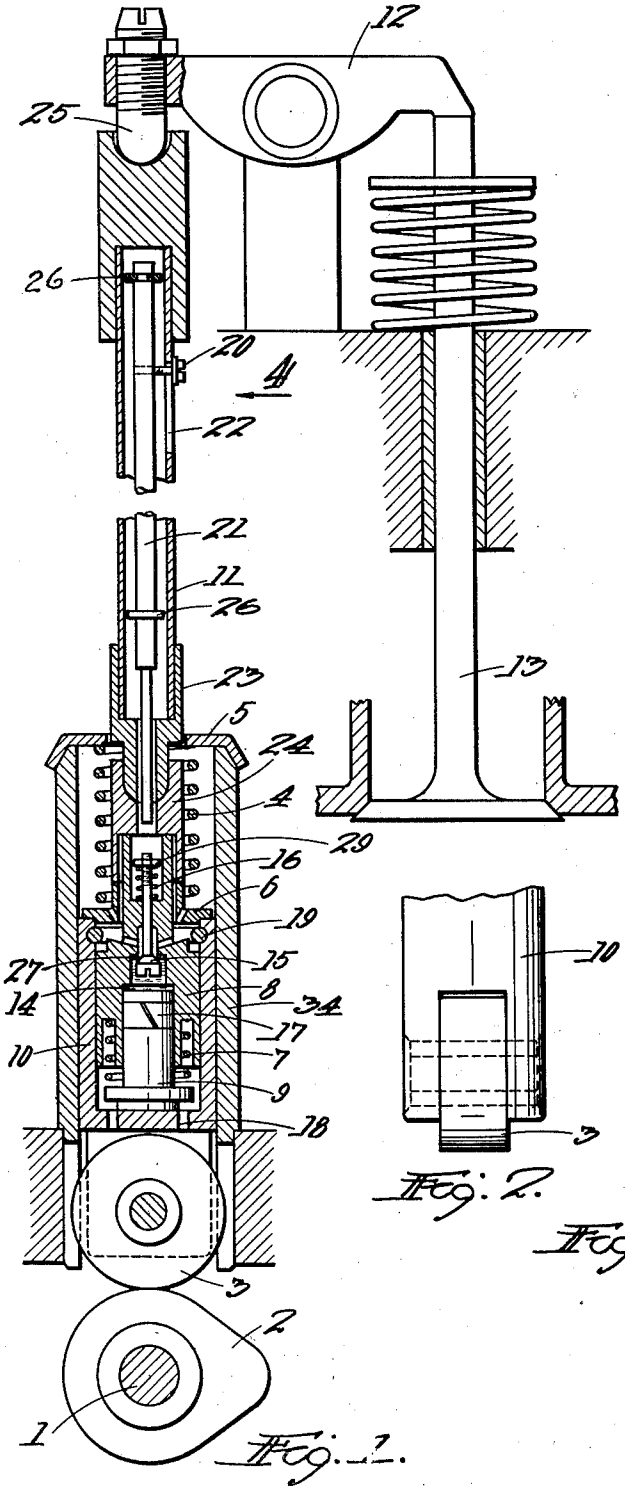

Fig. 1.

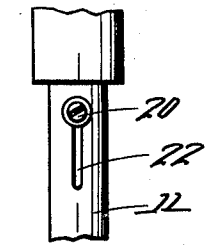

Fig. 4.

Fig. 2.

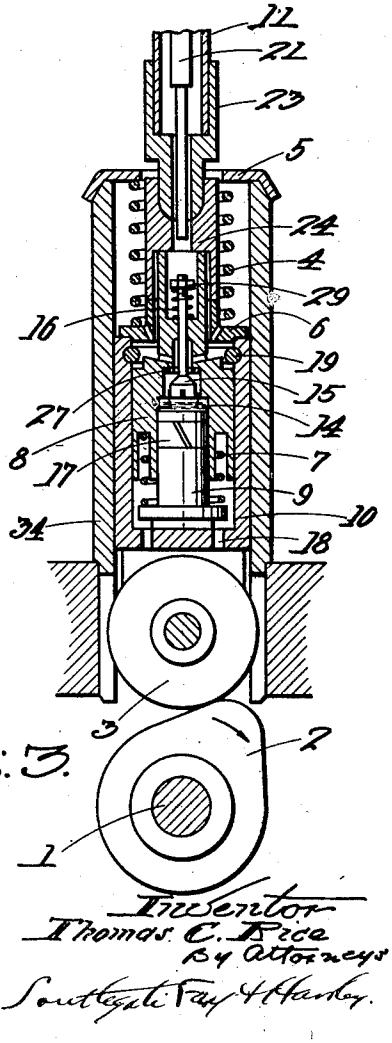

Fig. 3.

Inventor
Thomas C. Rice
By Attorneys
Southgate Fay & Hanley

Patented Oct. 23, 1934

1,977,778

UNITED STATES PATENT OFFICE

1,977,778

TAPPET VALVE CLEARANCE COMPENSATOR

Thomas C. Rice, Framingham, Mass.

Application September 3, 1929, Serial No. 389,927

12 Claims. (Cl. 123—90)

This invention relates to a compensator for the various clearances between the operating cam and the valve stem of an internal combustion engine.

The principal objects of the invention are to transfer all clearance in the valve operating mechanism between the cam shaft and the intake or exhaust valve stem to a non-metallic device, such as an oil cushion chamber, in which the impact is received by a body of oil confined in a space; to provide a construction for this purpose which will add very little to the expense of the ordinary constructions for transmitting motion from the cam to the valve, and to prevent the admission of air to the cushion chamber and keep air out of it at all times.

Other objects and advantages of the invention will appear hereinafter.

Reference is to be had to the accompanying drawing in which

Fig. 1 is a central sectional view of a preferred means for transmitting motion from the cam to the valve of an internal combustion engine showing the valve for the cushion chamber closed;

Fig. 2 is a side view of the hollow part of the same;

Fig. 3 is a view similar to Fig. 1 but showing the valve for the cushion chamber open, and

Fig. 4 is a side view of the push rod showing the locking screw for the oil releasing rod in raised position.

I have shown the invention as applied to a well-known type of valve-operating mechanism in which a cam shaft 1 is provided with a cam 2 operating on a roller 3 carried by a push rod lifter 10. The push rod lifter guide 34 is provided with a clamp 5 at the top against which bears a spring 4 for holding the push rod lifter down. This spring in turn bears on a collar 6 on the top of the push rod lifter 10 and keeps the roller 3 down on the cam no matter what the position of the cam may be.

The push rod lifter guide clamp 5 is perforated at the center for receiving the push rod 11 which is hollow and which bears on the bottom of an adjusting screw 25. This screw is held adjustably in the rocker-arm 12 which operates the valve 13 in a well known way. The push rod 11 is provided with a lower end 23 which bears in a recess in a push rod adapter 24. Inside the adapter is an extension of the oil valve body 8 serving as a carrier for an oil valve 15. The oil valve has a tapered upper surface for engaging its valve seat 27 and the spring 16 operates on a nut 29 for normally raising this valve and closing it against the seat 27 in the top of the oil valve body 8. This body has the surrounding collar 6 above it on which the spring 4 bears.

In a recess on the bottom of the oil valve body 8 is a spring 7 which bears on an oil valve plunger 9. This plunger is provided with a packing ring 17 at the top which forms the bottom of an oil chamber 14 and acts as a cushion chamber. This chamber has two parts, the lower one at the top of the plunger having a greater diameter than the upper one. It is at the top of the cushion chamber that the seat 27 is provided for the valve 15. The bottom of the push rod lifter 10 is provided with openings 18 for the escape of any oil leaking out, of the cushion chamber.

An oil release rod 21 is located within the hollow push rod 11 and has a reduced end extending down into a passage in axial alignment with the valve 15 and just above it. This rod 21 has washers 26 at intervals, fitting into the interior of the hollow push rod 11, and it can be adjusted up and down through a screw 20 operating in a slot 22 in the push rod. When the rod 21 is lowered, it engages the stem of the oil valve 15 and that valve is opened.

Lubricating oil drains down the push rod and lubricates the entire valve operating mechanism. In engines not having a force feed lubrication to the rocker-arm shaft, the lubricating oil is fed in any well-known way to the push rod. When applied to the valve-in-head type, having force feed lubrication to the shaft of the rocker-arm 12, the oil is fed to the compensator from the constant supply and drains down the push rod the same way.

As the cam shaft rotates, the roller 3 is held down firmly against the cam 2 at all times by the holding down spring 4 which is compressed between the guide clamp 5 on the push rod lifter guide and the collar 6 on the push rod lifter. As the trailing side of the cam 2 leaves the roller, the oil valve body spring 7, compressed between the oil valve body 8 and the oil valve plunger 9, forces the latter down against the bottom of the lifter 10. It also holds the oil valve body 8 and the push rod 11 up against the rocker-arm 12. The latter therefore is held firmly against the stem of the valve 13 at all times.

As the roller 3 is forced down against the lowest part of the cam, the downward movement of the oil valve plunger 9 creates suction in the cushion chamber 14. This draws the oil valve 15 from its seat 27 and fills the oil cushion chamber 14 with oil, which will drain in under the forced suction, from the concave surface at the top of the oil valve body 8 over which the oil draining down the push rod 11 flows. This concave surface constitutes an oil reservoir in which the oil is not under pressure so that it is free to allow any air in it to escape by gravity. The oil valve 15 is then returned to its seat by a spring 16 which of course acts promptly as soon as the suction is released. This seals the oil in the cushion chamber 14 and, on the next upward

movement, the lifter 10 is carried upward, forcing the plunger 9 against the film of oil in the lower part of the oil cushion chamber. Thus when the opening of the intake or exhaust valve occurs there is no metallic contact, but the pressure is transmitted through this oil film and the entire operation is contained within the push rod lifter guide 34.

On account of the positive action of the tapered oil valve 15 and the close fit of the plunger 9 and the ring 17, only very slight leakage of oil from the chamber 14 is possible. Any leakage that takes place is drained off through the holes 18 and returned to the crank case.

A slight leakage of oil from the oil cushion chamber 14 occurs on the upward movement of the plunger 9 when the cam 2 raises the roller 3 in opening the engine valve 13. This seepage by the plunger 9 drains through the holes 18 at the bottom of the lifter 10 into the crank case. The oil which has been forced from the oil cushion chamber 14 is then replaced by the retraction of the plunger 9, which opens the oil valve 15 at the time when the trailing side of the cam 2 leaves the roller 3 as the engine valve closes. This action is repeated on each opening of the engine valve, of course, and causes a slight drainage from the concaved surface as the oil is drawn through the inclined ports into the oil cushion chamber 14 by the action of the opened oil valve 15. The continuous supply of gravity fed oil is directed to flow down the outside surface of the push rod 11 and the adapter 24 where it drains into the concaved surface at the top of the oil valve body 8. The aeriferous liquid does not accumulate on the concaved surface where it must remain until it is drawn into the oil cushion chamber. The air bubbles riding on the surface of the overflowing oil follow the path of least resistance and are carried beyond the inlet passages at the bottom of this concaved surface. The entire body of liquid which is drawn into the oil cushion chamber 14 does not exhaust the flow of oil passing over the concaved surface, therefore the air bubbles contained in the liquid are not drawn through the inlet passages into the oil cushion chamber. The air bubbles and the surplus oil pass over the concaved surface at the top of the oil valve body 8 and drain between the lifter 10 and the guide 34 into the crank case. The oil supply flowing over the concaved surface greatly exceeds the very small amount which is drawn into the oil cushion chamber, therefore the air bubbles which are carried on the surface of the overflowing oil are washed over the concaved surface and drain on to the outer portion of the oil valve body 8 below the stop ring 19.

In case of sticky valves, broken valve springs and the like, expansion of the oil valve body and plunger and the upward movement of the rod is checked by the oil valve body stop ring 19 which is fitted into the inside wall of the lifter. This prevents the compensator from jamming the push rod and causing any damage to the valve mechanism. If it is desired to adjust the compensator or check valve timing, it is necessary to release the oil in the chamber 14 before doing it. This is done by loosening the screw 20 at the top of the push rod and lowering the release rod 21 until the screw 20 strikes the bottom of the slot 22 where it should be tightened until the adjustment has been made. This causes the bottom of the rod 21 to pass through the lower end of the push rod and the adapter 24. Here it strikes the top of the stem of the valve 15 forcing the valve from its seat. By a downward pressure with a screwdriver or the like, at the rocker-arm adjusting screw 25, the oil in the cushion chamber is forced out past the open oil valve and the inlet passage to the oil valve body. The oil valve body is then allowed to move downward until it comes to a metal to metal contact with the oil valve plunger, there being no oil trapped in the chamber 14 at this time. The clearance between the valve stem and the rocker-arm may then be checked and adjusted in the usual manner. This can best be done while the engine is running but that is not essential as ample clearance may be allowed for the expansion of metal due to heat. After clearance adjustment has been made the screw 20 is loosened and the rod 21 is raised and the screw tightened at the top of the slot in the rod 11.

The oil release rod washers 26 are employed to prevent the rod from rattling in the hollow push rod 11.

It will be seen therefore that although the parts can be adjusted in the usual manner yet while in operation there is no metal to metal contact between the cam 2 and the adjusting screw 25, or at any point between them. Non-metallic means is provided for moving the rocker-arm from the cam and all clearance in the valve operating mechanism between the cam shaft and the valve stem is transferred to the oil cushion chamber 14.

Although I have illustrated and described only one form of the invention I am aware of the fact that modifications can be made therein by any person skilled in the art without departing from the scope of the invention as expressed in the claims. Therefore I do not wish to be limited in this respect but what I do claim is:

1. In a device for transmitting motion to a valve rocker-arm to operate the valve, the combination with a cam, and a roller operating on the cam, of a push rod connected with the rocker-arm, a push rod lifter, a spring for holding down the push rod lifter and holding the roll in constant contact with the cam throughout the rotation of the cam shaft, said roll being mounted on the push rod lifter, a valve body having a chamber, a piston in said valve body adapted to control the admission of a liquid to said chamber, a lighter spring for holding the valve body up and the piston down, a valve for controlling the admission of liquid to and the passage of it from said chamber, and a third spring for normally closing said valve, whereby the recession of the plunger will open the valve and permit liquid to enter the chamber, and the last named spring will close it, whereby the transmission of motion from the roll to the rocker-arm will take place through said chamber without a metal to metal contact.

2. In a device of the character described, the combination of a constantly rotating cam, a cam roll thereon, a valve operating rocker arm, a push rod for operating the rocker arm, a push rod lifter on which said cam roll is mounted, a spring for holding the push rod lifter down and the cam roll constantly on the cam, a body having a passage therein, a single acting plunger in said passage, a chamber above said plunger in said body at the end of the passage, and a valve for opening and closing the entrance to and exhaust from said chamber, said valve being openable by the retraction of the plunger.

3. In a device of the character described, the

combination of a constantly rotating cam, a cam roll thereon, a push rod lifter on which said cam roll is mounted, a spring for holding the push rod lifter down and the cam roll constantly on the cam, a body having a passage therethrough, a single acting plunger in said passage, a chamber in said body at the end of the passage, a spring controlled valve for opening and closing the entrance to and exhaust from said chamber, said valve being openable by the retraction of the plunger, a hollow push rod for connecting said push rod lifter with the engine valve, and a release rod located inside said push rod and movable into two positions, in one of which it engages the said first named valve and holds it open.

4. In a device of the character described, the combination of a plunger, a body in which said plunger is located, a push rod lifter having said body located inside it, a chamber in said body above the plunger having an outlet at the top, means by which lubricating oil can drain into said chamber, a valve for closing the outlet, a spring for closing said valve normally, whereby the descent of the plunger will act by suction on the valve to pull it open against the opposition of said spring to admit oil, said chamber constituting means for transmitting pressure from said plunger, and a valve-operating means for receiving pressure from said chamber without metallic contact.

5. In a device of the character described, the combination of an oil valve body, an oil valve plunger in said body, an oil cushion chamber above said plunger having a valve seat at its top constituting its only inlet and outlet, an oil reservoir entirely above said body containing oil free from pressure, a valve in the chamber for said seat, a spring for holding the valve closed, means whereby said valve can be held open when desired, and a free port extending upwardly directly from a space above the valve seat to a point at the bottom of the oil reservoir, said port being submerged in oil at all times, whereby lubricating oil is drawn into the oil cushion chamber out of contact with air upon the operation of the plunger when the engine valve closes.

6. In a device of the character described, the combination of a cam, a chamber connected with the cam to be raised and lowered thereby and adapted to entrap lubricating oil therein and having an inlet valve seat at its top, an upwardly closing valve normally closing said seat, means for moving the valve from its seat to let oil into the chamber operated directly by the movement of the cam when it closes the engine valve, and a vertically slidable rod above said valve adapted to engage the rod of the valve for positively forcing the valve from its seat when the chamber rises to allow the oil and air in the chamber to escape, whereby a metal to metal contact can be secured to permit proper adjustment in installing the device, said rod being manually adjustable while the machine is running.

7. In a device of the character described, the combination of an oil valve body, an oil valve plunger in said body, a cushion chamber at the top of the plunger having a valve seat at the top constituting its only inlet and outlet, a valve in the chamber for said seat, a spring for holding the valve closed, said body having ports extending upwardly from a space above the valve seat, and a manually operable oil release rod above the valve and adapted to be moved by hand into a position to engage the valve to open it.

8. In a device of the character described, the combination of an oil valve body, an oil valve plunger in said body, an enclosed chamber at the top of the plunger having a valve seat at the top of the chamber constituting its only inlet and outlet, a valve in the chamber above the plunger for said seat having a rod extending upwardly, a push rod, an oil release rod above the valve rod and adjustably located in the push rod independently of the push rod, said oil release rod being adapted to be moved by hand when the machine is running to a position where it will be engaged by the valve rod to open the valve for adjusting purposes, and means whereby lubricating oil is delivered into said chamber by gravity down the push rod.

9. The combination of an oil chamber, means by which the oil chamber drains oil out very slowly, said oil chamber having an oil inlet and means for conducting a stream of oil to flow over said inlet in a volume greatly exceeding the drainage from the chamber, whereby any air bubbles in the stream of oil are prevented from entering said chamber.

10. The combination of an oil valve body having a chamber therein, a plunger closely fitting the bottom of the chamber allowing only a slight leakage, the space at the top of the plunger in said chamber constituting an oil chamber adapted to supply oil to the plunger by very slow drainage, the top of said oil valve body having means for receiving oil fed to it from above in large quantities and discharging oil by overflowing, and restricted means for draining whatever amount of oil is needed from the bottom of said oil receiving means into the oil chamber as needed and excluding from said oil chamber any air in the current of oil passing through or by said oil receiving means.

11. The combination of an oil valve body having a chamber therein, a plunger closely fitting the bottom of the chamber allowing only a slight leakage, the space at the top of the plunger in said chamber constituting an oil chamber adapted to supply oil to the plunger and having an oil escape port at the top, the top of said oil valve body having an open space for receiving oil fed to it from above and discharging it by overflowing, and restricted means for draining whatever amount of oil is needed from the bottom of said open space into the oil chamber as needed, whereby air bubbles in the current of oil passing through or by said open space will overflow and be prevented from descending into said oil chamber.

12. In a device for operating a valve of an internal combustion engine, the combination of an oil valve body, an oil valve plunger in said body, a cushion chamber at the top of the plunger having a valve seat at its top constituting its only inlet and outlet, an upwardly closing valve within the chamber for said seat, means for normally holding the valve closed, said body having ports extending upwardly from above the valve seat and free at the top to allow any bubbles in the oil to escape, and an oil valve release rod above the valve and movable to two positions in one of which it will engage the stem of the valve at one end of the stroke for the purpose of opening the valve.

THOMAS C. RICE.