Nov. 11, 1924. 1,514,991

W. H. REES

INKING DEVICE FOR PRINTING MACHINES

Filed Oct. 30, 1923

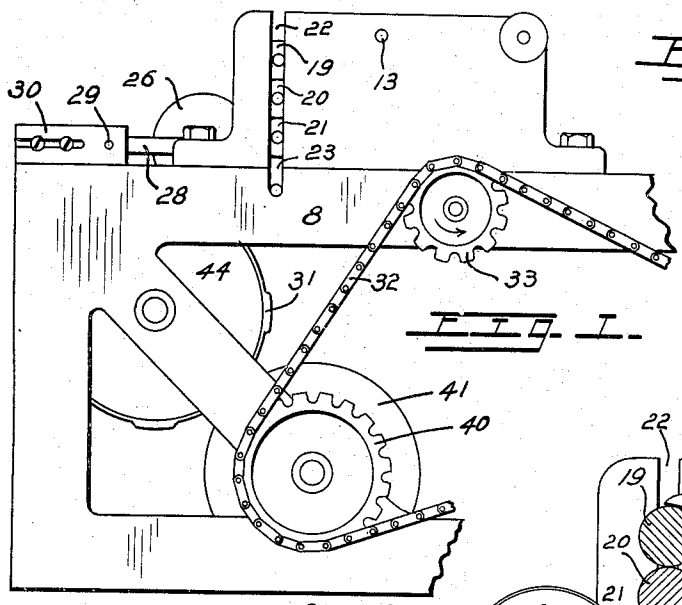

Fig. 1.

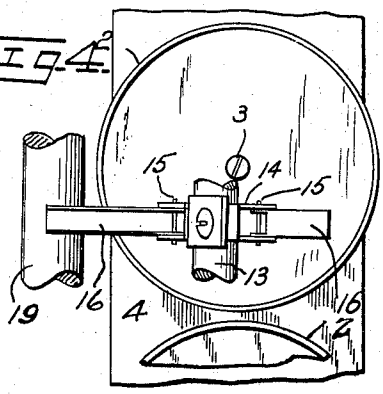

Fig. 4.

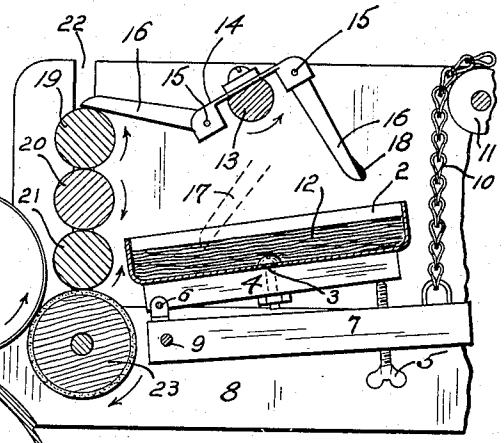

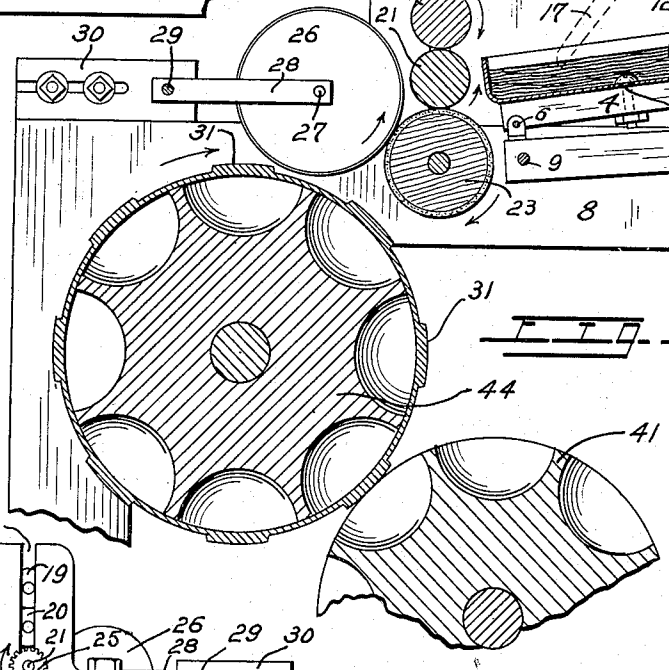

Fig. 3.

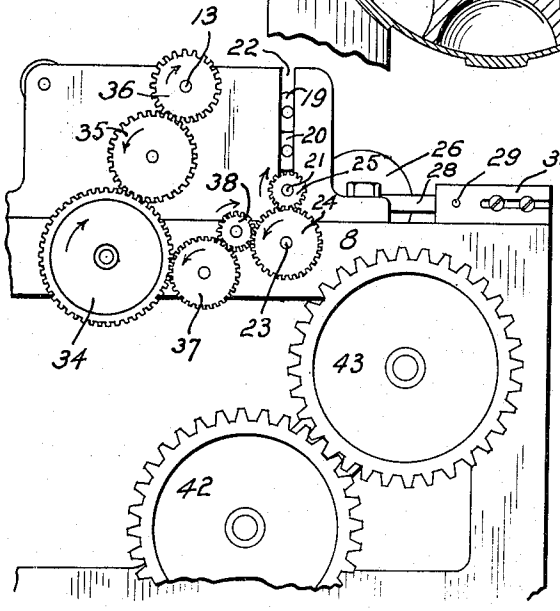

Fig. 2.

Inventor;
William H. Rees,
per W. W. Crandall
Attorney.

Patented Nov. 11, 1924. 1,514,991

UNITED STATES PATENT OFFICE.

WILLIAM H. REES, OF LOS ANGELES, CALIFORNIA.

INKING DEVICE FOR PRINTING MACHINES.

Application filed October 30, 1923. Serial No. 671,699.

To all whom it may concern:

Be it known that I, WILLIAM H. REES, a citizen of the United States, residing at Los Angeles, in the county of Los Angeles and State of California, have invented a new and useful Inking Device for Printing Machines, of which a specification is set forth below.

In this specification, and the accompanying drawing, I shall describe and show a preferred form of my invention, and specifically mention certain of its more important objects. I do not limit myself to the forms disclosed, since various changes and adaptations may be made therein without departing from the essence of my invention as hereinafter claimed; and objects and advantages, other than those specifically mentioned, are included within its scope.

My invention relates to inking devices adapted for use with various types of rotary printing machines and its objects are, first, to provide means for distributing ink on the inking rollers of such machines in a more uniform and satisfactory manner than has hitherto been possible; second, to afford facilities for using ink varying considerably in consistency, and including relatively hard inks; and, third, to accomplish the above results in a device of great simplicity which adapts itself to varying conditions and in which no delicate adjustments are required.

My objects are attained in the manner illustrated in the accompanying drawing in which I have shown my invention applied to a machine for imprinting spherical articles such as walnuts or the like. In this drawing—

Figure 1 is a side elevation of a portion of such a machine;

Fig. 2 is a similar view of the opposite side of the same,

Figure 3 is an enlarged longitudinal section of the machine in elevation; and

Figure 4 is a plan view of one of the ink fountains of my device, and the means by which the ink is taken therefrom.

In my device the ink supply is contained in one or more shallow open pans 2, when there is a plurality of these they are arranged in a row perpendicular to the picture plane of Fig. 3. Each of the pans is centrally pivoted at 3 and, when there is a plurality, each is mounted upon an individual elevating block 4, adapted to be variably adjusted by screw 5 and hinged at 6 to a tilting board 7. The forward or left hand edge of this board is hinged or pivotally mounted upon frame 8 of the machine, as shown at 9. The rear edge of the board is adapted to be variably elevated in some convenient manner, as by a chain 10 wound upon drum 11, the latter being provided with means for holding it in any desired angular position.

The ink 12, by reason of its semi-solid or pasty nature, will not flow appreciably in the pans by reason of their tipping, except with the lapse of considerable time. In use the pans are intermittently turned a few degrees at short intervals, in a manner to be explained, and the body of ink therefore remains of substantially uniform thickness.

Above the row of ink fountains, and parallel therewith, the finger shaft 13 is journalled upon the frame of the machine. This shaft carries a transverse bracket 14 above each of the fountains, and located to one side of the center thereof, as shown in Fig. 4. Pivoted to the respective extremities of these brackets at 15 are trough-shaped fingers 16. The revolution of shaft 13 causes these fingers to drag across the surface of the ink body, as shown in dotted lines 17 in Fig. 3, and in so doing they pick up a small quantity of ink on their flat bottoms. The amount of ink thus picked up is controlled by the elevation of tilting board 7.

In Fig. 3 the right hand finger 16 has just left the surface of the ink and carries a small quantity of the latter at its free extremity 18. The manner in which it is pivoted to bracket 14, permits this finger, under the action of gravity, to assume the position shown at the right of the finger shaft. It will maintain this position with respect to the revolving shaft until the revolution of the latter carries it to the point where gravity will cause it to fall down upon primary roll 19. It will then occupy the position of the left hand finger 16 of Fig. 3. The ink at its extremity will thus be deposited upon roll 19 with a smack, tending to flatten and spread the ink upon the surface of the roll. Further revolution of the finger shaft causes the finger to drag over the roll and wipe off the ink remaining upon it after the smack. The finger will then drop down and be dragged across the

surface of the ink body in the fountain in the manner described, and the cycle will be repeated indefinitely.

As previously noted the fingers 16, due to their positioning on the finger shaft, drag across the ink surfaces to one side of the centers of the ink fountains. The latter are freely pivoted to the tilt board at 6 and the adhesion of the ink to the fingers causes the fountains to revolve a few degrees at each contact of the fingers with the ink. This periodic and irregular turning of the fountains keeps the fingers from gouging out troughs in the ink body.

Beneath primary roll 19 are two similar rolls 20 and 21, floatingly journalled in vertical slots 22 in the frame of the machine. All three of these rolls are in frictional engagement due to their superposed weight. The lowermost roll 23 of the series is made larger in diameter than the others and is preferably covered with a fairly thick layer of felt or similar absorbent material. This roll is fixedly positioned and is positively driven in a convenient manner, as by the spur gear 24 shown in Fig. 2. Roll 21, above it, is also positively driven by the spur gear 25.

The ink deposited upon roll 19 is squeezed out thin in passing between it and roll 20 and the latter becomes coated, by contact with the roll above it, with a fairly even deposit of ink. The process is repeated again as to roll 21 which becomes more evenly coated. In a similar manner the roll 23 secures a still more uniformly deposited supply of ink which saturates its absorbent surface.

The inking roll 26 is journalled at 27 to the free extremities of a pair of arms 28, pivoted at 29 to adjustably positioned blocks 30, on the side frames of the machine. The weight of the inking roll is normally sustained by roll 23 which keeps it supplied with the proper amount of evenly distributed ink.

In the application of my invention selected for illustration the type, or marking dies are arranged upon a cylindrical surface and are shown at 31. The blocks 30 are adjusted in such a manner that when the marking dies come under the inking roll they lift it slightly away from roll 23. At these times therefore the weight of the inking roll is sustained by the marking dies so that the inking of the dies is always accomplished under the same pressure, and the peripheral speeds of the inking roll and marking dies are necessarily identical.

In the machine illustrated, which as previously stated is used for marking walnuts and similarly shaped articles, I prefer to cover the surface of the inking roll with a layer of thin silk. Obviously, however, other surface coverings may be employed, or the roll can be made of gelatinous material without covering if preferred.

The imprinting machine described forms no part of the present invention, but it is to be noted that finger shaft 13 and roll 23 are positively driven. Power is supplied for this purpose through chain 32 and sprocket 33 as seen in Fig. 1. Gear 34 is mounted at the other end of this sprocket shaft as shown in Fig. 2. It drives the finger shaft 13 through gears 35 and 36; and roll 23 through gears 37, 38 and 24. Sprocket 40 drives the specially shaped drum 41 for holding the articles to be imprinted, and the large gear 42 at the other end of this drum shaft drives gear 43 and through it drum 44, on which the marking dies are mounted.

It will be seen from the foregoing description that my invention completely avoids the necessity for using ductor rolls and similar devices and that it has many advantages that will appeal to those having an interest in this art.

I claim:

1. An inking device comprising one or more centrally pivoted circular fountains; and yieldable fingers adapted to revolve in a vertical plane above said fountains and to drag eccentrically across the surface of ink therewithin to become inked while causing said fountains to rotate.

2. An inking device comprising one or more centrally pivoted circular fountains; yieldable fingers adapted to revolve in a vertical plane above said fountains and to drag eccentrically across the surface of ink therewithin to become inked while causing said fountains to rotate; and means for variably elevating said fountains by tilting.

3. An inking device comprising one or more centrally pivoted circular fountains; yieldable fingers adapted to revolve in a vertical plane above said fountains and to drag eccentrically across the surface of ink therewithin to become inked while causing said fountains to rotate; and an ink roll with which said fingers are adapted to contact to deposit ink thereupon.

4. An inking device comprising one or more centrally pivoted circular fountains; yieldable fingers adapted to revolve in a vertical plane above said fountains and to drag eccentrically across the surface of ink therewithin to become inked while causing said fountains to rotate; and a series of rolls upon which said fingers are adapted to deposit ink.

5. An inking device comprising one or more centrally pivoted circular fountains; yieldable fingers adapted to revolve in a vertical plane above said fountains and to drag eccentrically across the surface of ink therewithin to become inked while causing said fountains to rotate; a series of rolls

upon which said fingers are adapted to deposit ink; and a floating ink roll adapted normally to be supported by the last roll of said series and to be raised therefrom and be supported by marking dies while being inked.

6. An inking device comprising one or more centrally pivoted circular fountains; yieldable fingers adapted to revolve in a vertical plane above said fountains and to drag eccentrically across the surface of ink therewithin to become inked while causing said fountains to rotate; a series of rolls upon which said fingers are adapted to deposit ink; and a floating ink roll adapted normally to be supported by the last roll of said series and to be raised therefrom and be supported by marking dies; said last roll having an ink absorbent surface.

WILLIAM H. REES.