US00D576565S

(12) United States Design Patent

Chou et al.

(10) Patent No.: US D576,565 S
(45) Date of Patent: ** Sep. 9, 2008

(54) **DIMMER SWITCH**

(75) Inventors: **Cheng-Lung (John) Chou**, Great Neck, NY (US); **Alfred J. Lombardi**, Syosset, NY (US); **Andrew E. Rawlins**, Reston, VA (US)

(73) Assignee: **Leviton Manufacturing Co., Inc.**, Little Neck, NY (US)

(**) Term: **14 Years**

(21) Appl. No.: **29/289,425**

(22) Filed: **Jul. 18, 2007**

(51) **LOC (8) Cl.** **13-03**
(52) **U.S. Cl.** **D13/169**
(58) **Field of Classification Search** ..... D13/169; 174/66; 200/5 R, 1 B, 433, 525, 553, 315, 200/329, 335, 332, 339; 338/176; 315/291–296
See application file for complete search history.

(56) **References Cited**

U.S. PATENT DOCUMENTS

3,770,920	A	*	11/1973	Poliak	200/457
4,489,297	A		12/1984	Haydon et al.	
4,567,375	A	*	1/1986	Jimerson et al.	307/98
4,669,804	A		6/1987	Munroe	
4,924,151	A		5/1990	D'Aleo et al.	
5,038,081	A		8/1991	Maiale, Jr. et al.	
5,059,871	A		10/1991	Pearlman et al.	
5,101,141	A		3/1992	Warner et al.	
D331,743	S		12/1992	Fujiyoshi	
5,191,265	A		3/1993	D'Aleo et al.	
5,225,765	A		7/1993	Callahan et al.	
5,248,919	A		9/1993	Hanna et al.	
5,319,301	A		6/1994	Callahan et al.	
D353,798	S		12/1994	Bryde et al.	
5,430,356	A		7/1995	Ference et al.	
D360,876	S	*	8/1995	Hughes	D13/177
5,510,679	A		4/1996	Maiale, Jr. et al.	
5,530,322	A		6/1996	Ference et al.	
5,662,213	A		9/1997	Kattler et al.	
D391,924	S		3/1998	Mayo et al.	
5,895,888	A		4/1999	Arenas et al.	
5,909,087	A		6/1999	Bryde et al.	
5,950,812	A		9/1999	Tanacan et al.	
6,005,308	A	*	12/1999	Bryde et al.	307/157
6,046,550	A		4/2000	Ference et al.	
6,091,205	A		7/2000	Newman, Jr. et al.	
6,178,681	B1		1/2001	Caloia et al.	
D439,220	S		3/2001	Mayo et al.	
6,211,626	B1		4/2001	Lys et al.	
6,297,724	B1		10/2001	Bryans et al.	
6,340,868	B1		1/2002	Lys et al.	
6,347,028	B1		2/2002	Hausman, Jr. et al.	
6,369,524	B1		4/2002	Sid	

(Continued)

Primary Examiner—Selina Sikder
(74) *Attorney, Agent, or Firm*—Carter, DeLuca, Farrell & Schmidt, LLP

(57) **CLAIM**

The ornamental design for a dimmer switch, as shown and described.

DESCRIPTION

FIG. **1** is a front left perspective view illustrating our new design for a dimmer switch with the broken lines showing, for illustrative purposes only, a back plate and a housing that is not part of the claimed design;

FIG. **2** is a front view thereof with the dashed lines showing the back plate;

FIG. **3** is a left side view thereof with the broken lines showing the back plate and the housing;

FIG. **4** is a right side view thereof with the broken lines showing the back plate and the housing;

FIG. **5** is a top view thereof with the broken lines showing the back plate and the housing; and,

FIG. **6** is a bottom view thereof with the broken lines showing the back plate and the housing.

1 Claim, 4 Drawing Sheets

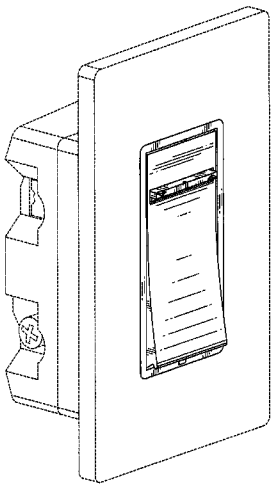

U.S. PATENT DOCUMENTS

6,380,692	B1	4/2002	Newman, Jr. et al.	
6,459,919	B1	10/2002	Lys et al.	
6,469,457	B2	10/2002	Callahan	
6,507,158	B1	1/2003	Wang	
6,528,957	B1	3/2003	Luchaco	
6,761,470	B2	7/2004	Sid	
D498,213	S	11/2004	Savicki, Jr. et al.	
6,891,117	B1	5/2005	Gouhl et al.	
6,917,167	B2	7/2005	Courtney et al.	
D517,999	S	3/2006	Merritt et al.	
D518,000	S	3/2006	Merritt et al.	
D519,466	S	4/2006	Merritt et al.	
7,038,910	B1	5/2006	Hodge et al.	
D523,824	S	6/2006	Lombardi et al.	
7,071,634	B2	7/2006	Johnson et al.	
D526,624	S	8/2006	Merritt et al.	
7,122,754	B2 *	10/2006	Endres et al.	200/339
D534,873	S	1/2007	Merritt et al.	
D534,875	S	1/2007	Wu	
D535,627	S	1/2007	Merritt et al.	
7,164,238	B2	1/2007	Kazanov et al.	
7,166,970	B2	1/2007	Johnson et al.	
7,170,018	B2	1/2007	Ilkhanov	
D542,230	S	5/2007	Merritt et al.	
D543,159	S	5/2007	Merritt et al.	
D553,102	S	10/2007	Merritt	
2003/0076281	A1	4/2003	Morgan et al.	
2003/0226682	A1	12/2003	Tufano et al.	
2003/0226684	A1	12/2003	Schmieta et al.	
2004/0002792	A1	1/2004	Hoffknecht	
2004/0212324	A1	10/2004	Callahan	
2005/0125083	A1	6/2005	Kiko	
2005/0248300	A1	11/2005	Walko et al.	
2006/0125649	A1	6/2006	Ostrovsky et al.	
2006/0279236	A1	12/2006	Johnson et al.	
2007/0126366	A1	6/2007	Frid	
2007/0193863	A1	8/2007	Wu	

* cited by examiner

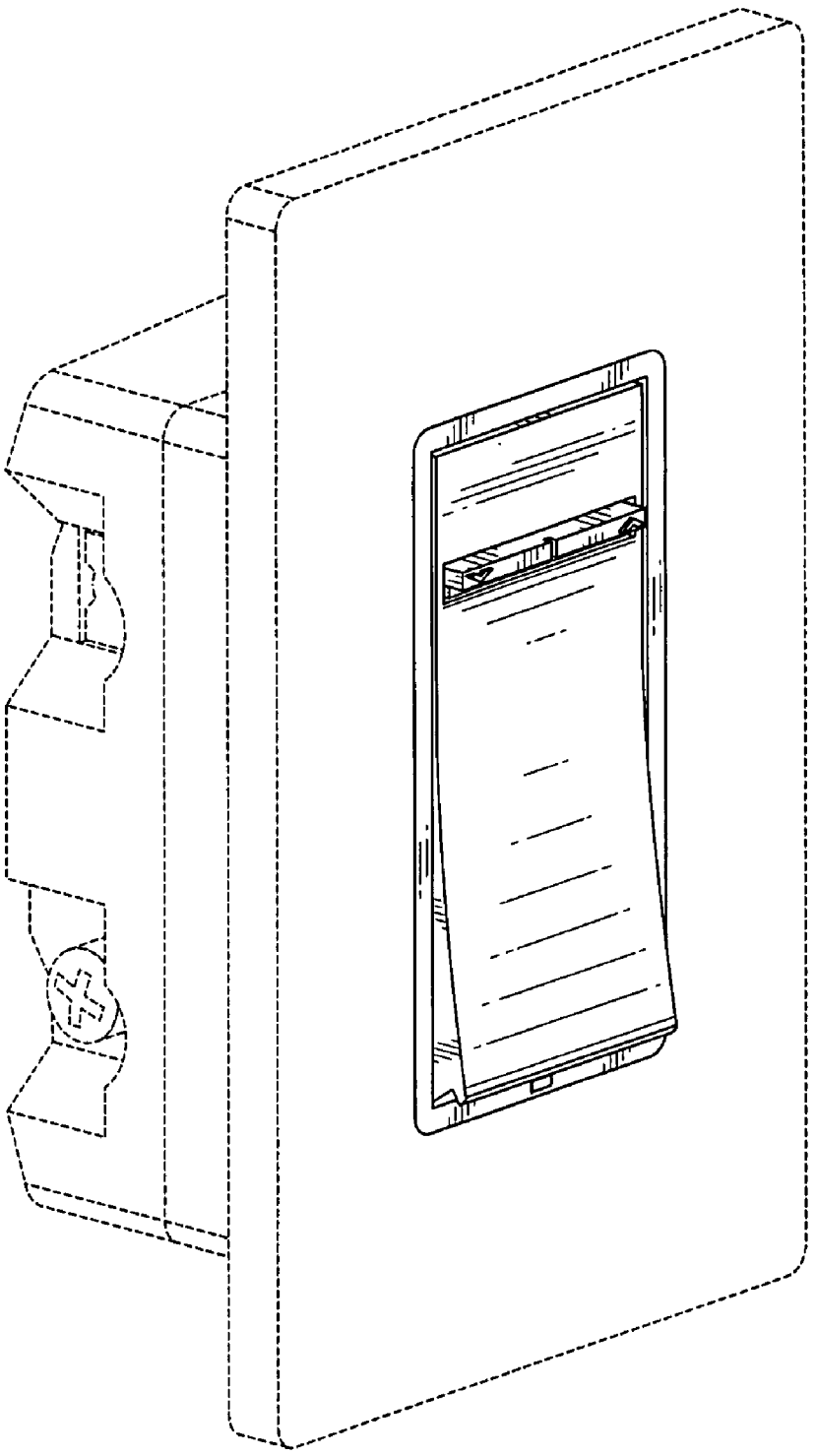

FIG. 1

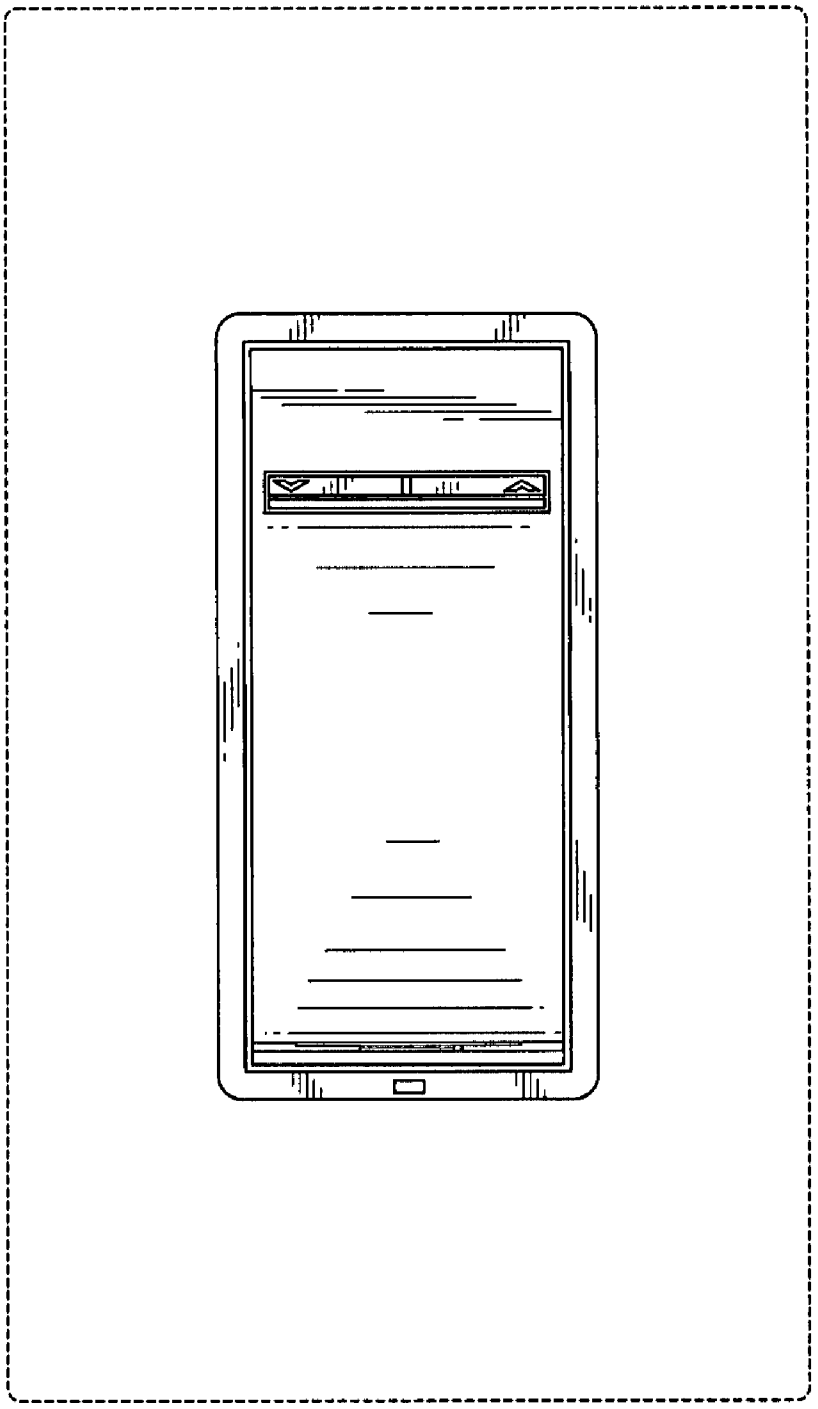

FIG. 2

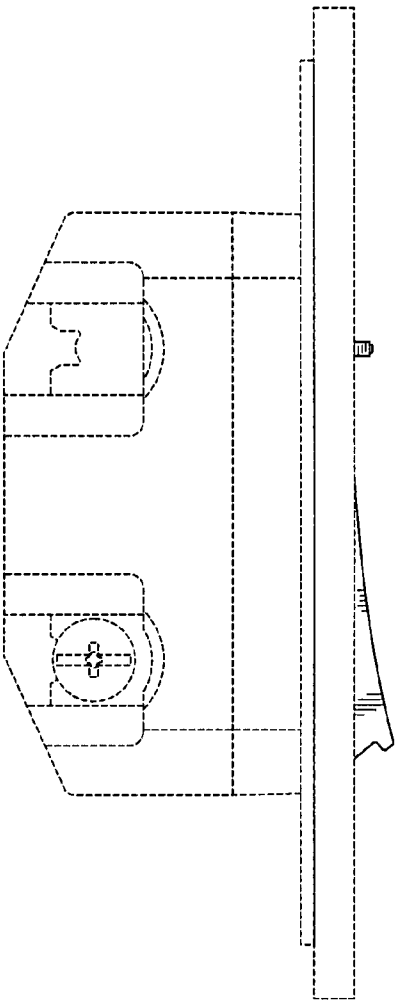

FIG. 3

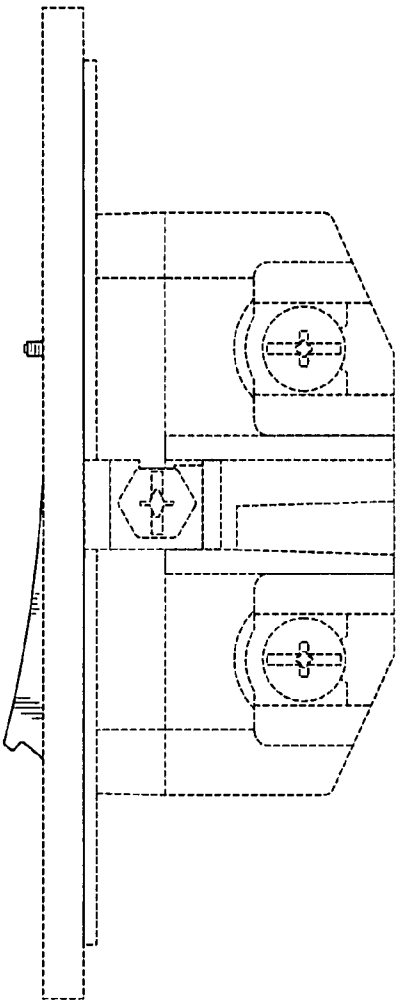

FIG. 4

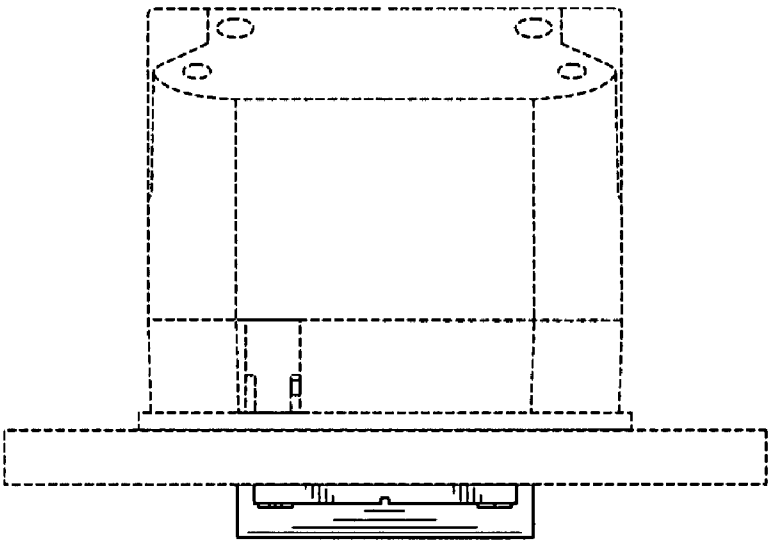

FIG. 5

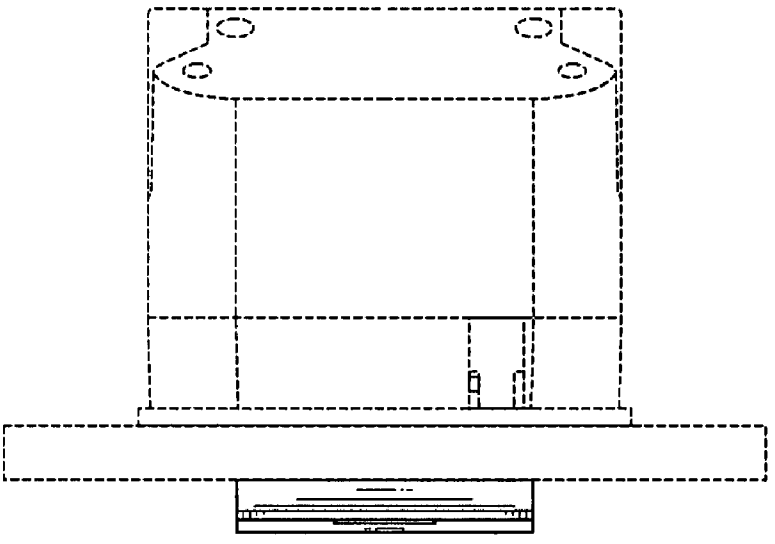

FIG. 6