US 20220089359A1

(19) United States

(12) Patent Application Publication (10) Pub. No.: US 2022/0089359 A1

SUH et al. (43) Pub. Date: Mar. 24, 2022

(54) **FOLDABLE CONTAINER HAVING CORNER LOCKING STRUCTURE**

(71) Applicant: **KOREA PALLET POOL CO., LTD**, Seoul (KR)

(72) Inventors: **Byong Yoon SUH**, Seoul (KR); **Yong Jun LEE**, Cheonan-si, Chungcheongnam-do (KR); **Shin Joon KANG**, Osan-si, Gyeonggi-do (KR); **Nu Ree LEE**, Seoul (KR)

(73) Assignee: **KOREA PALLET POOL CO., LTD**, Seoul (KR)

(21) Appl. No.: **17/425,297**

(22) PCT Filed: **Jan. 8, 2020**

(86) PCT No.: **PCT/KR2020/000319**

§ 371 (c)(1),
(2) Date: **Jul. 22, 2021**

(30) **Foreign Application Priority Data**

Jul. 9, 2019 (KR) 10-2019-0082883

Publication Classification

(51) **Int. Cl.**
B65D 88/52 (2006.01)

(52) **U.S. Cl.**
CPC ***B65D 88/522*** (2013.01)

(57) **ABSTRACT**

The present disclosure relates to a structure for firmly coupling a corner of a top plate of a foldable container that can be folded by use of a torsion bar, in which the top plate is completely detachably coupled to the side wall panel. The foldable container according to the present disclosure includes posts P provided on both sides of the front panel and the rear panel in a vertical direction to bear a load of the container, torsion bars provided at lower ends of the side panel, the front panel, and the rear panel, and a corner locking structure that couples the top plate, the rear panel, and the side panel at an upper corner, such that the corners are firmly coupled while the container is in an unfolded state.

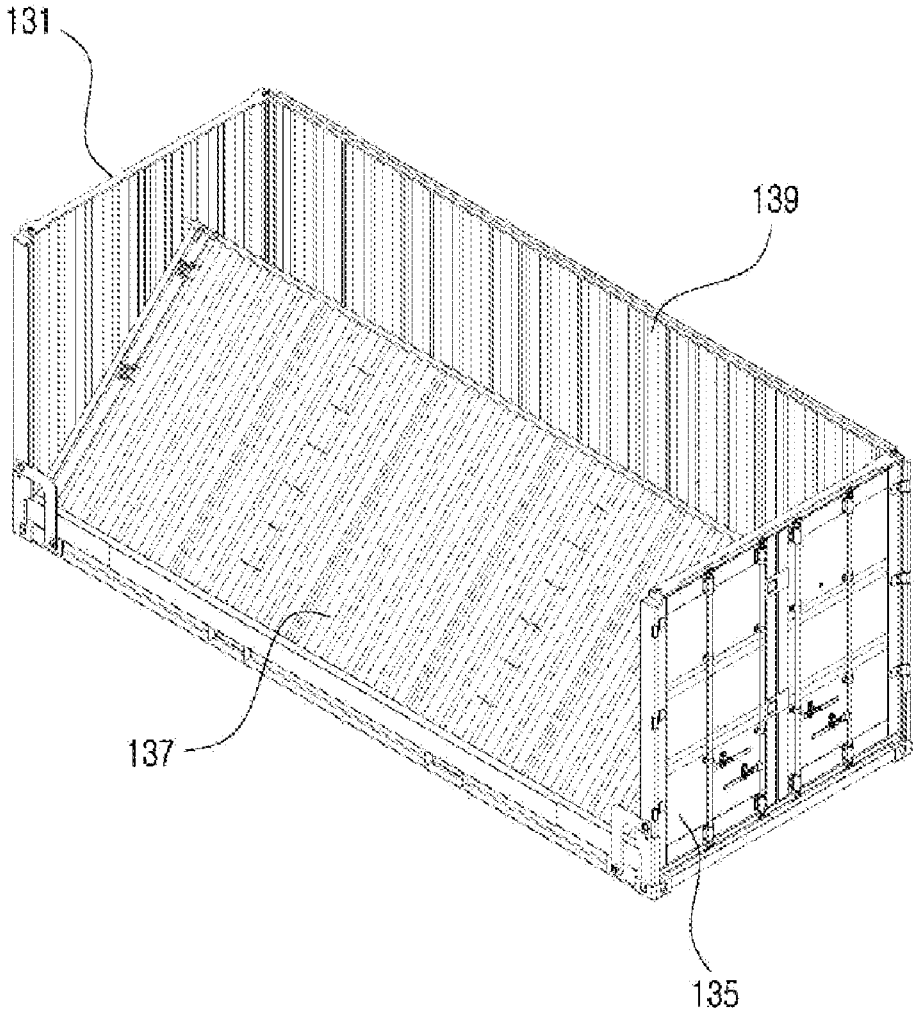

FIG. 1

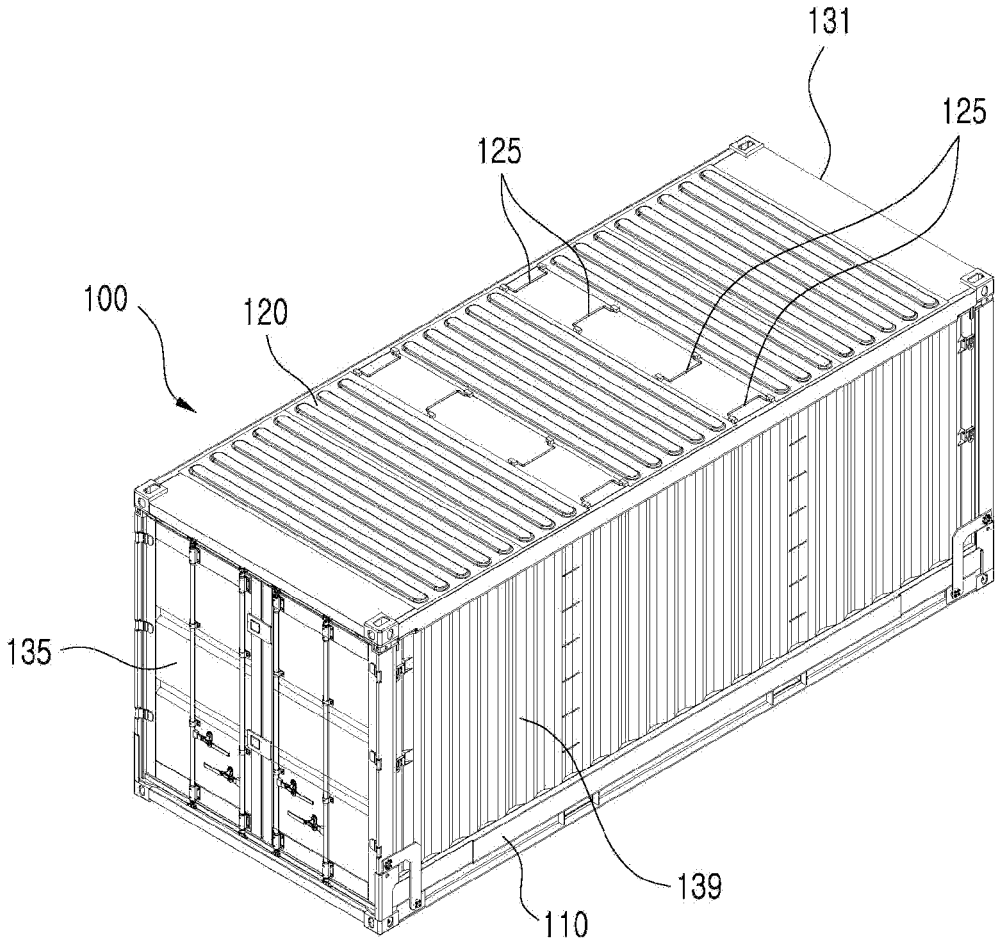

FIG. 2

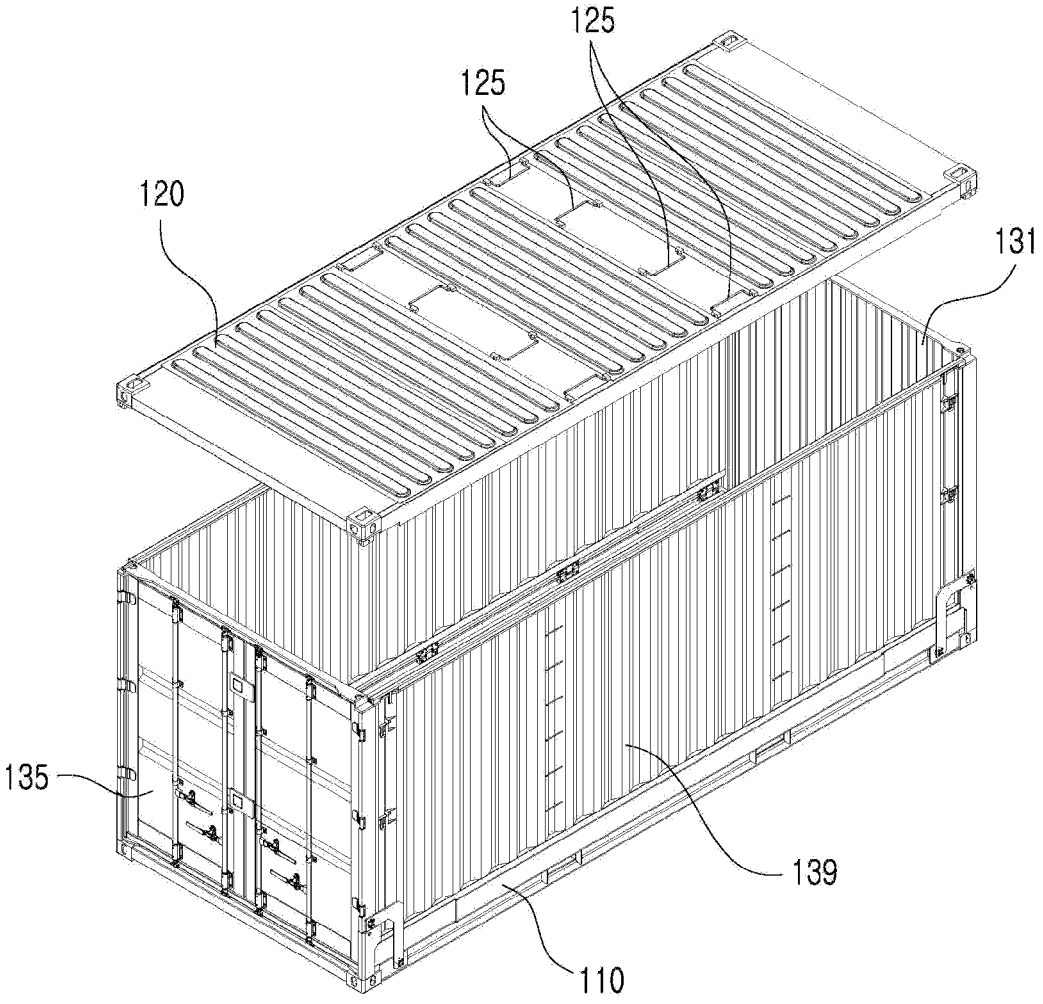

FIG. 3

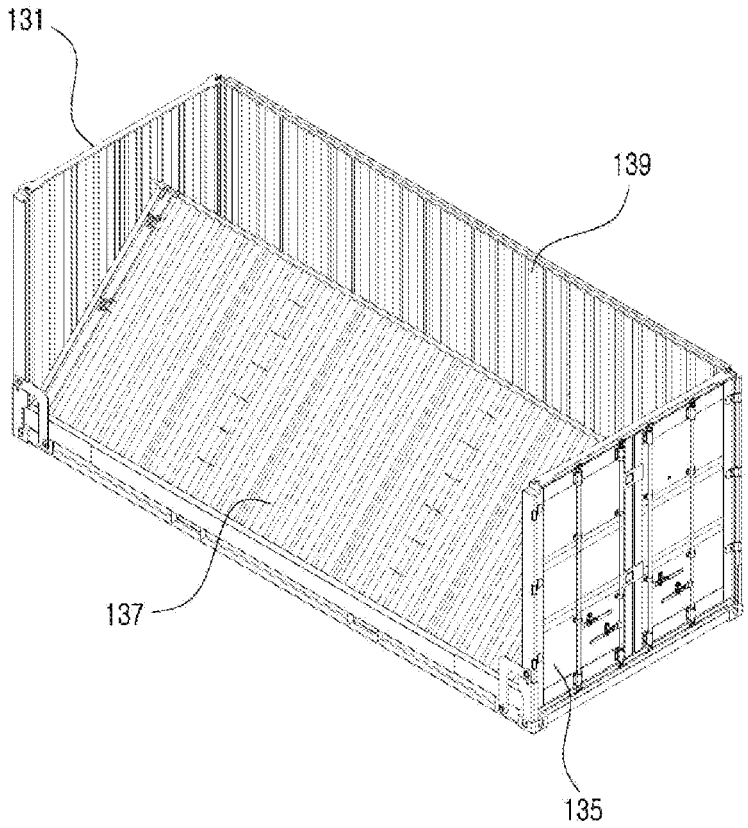

FIG. 4

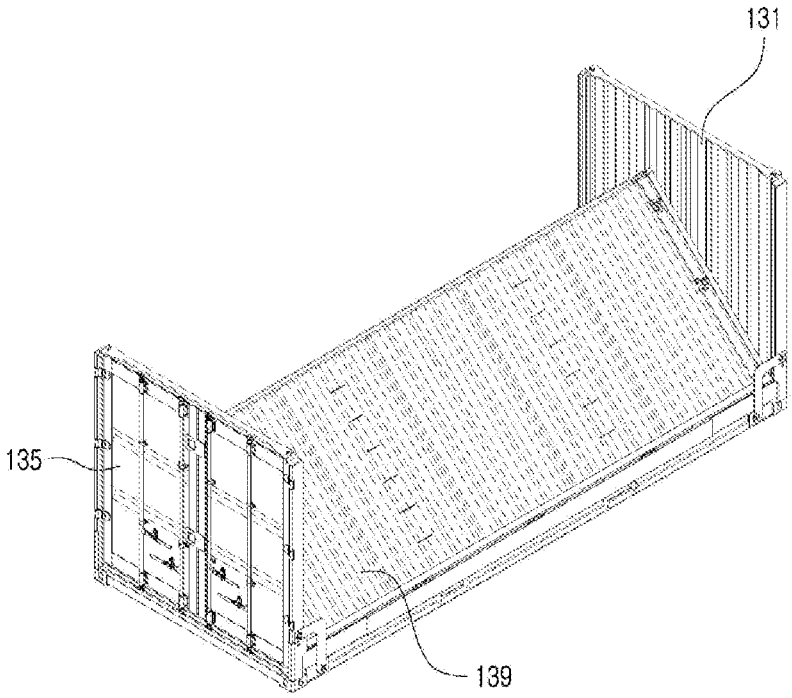

FIG. 5

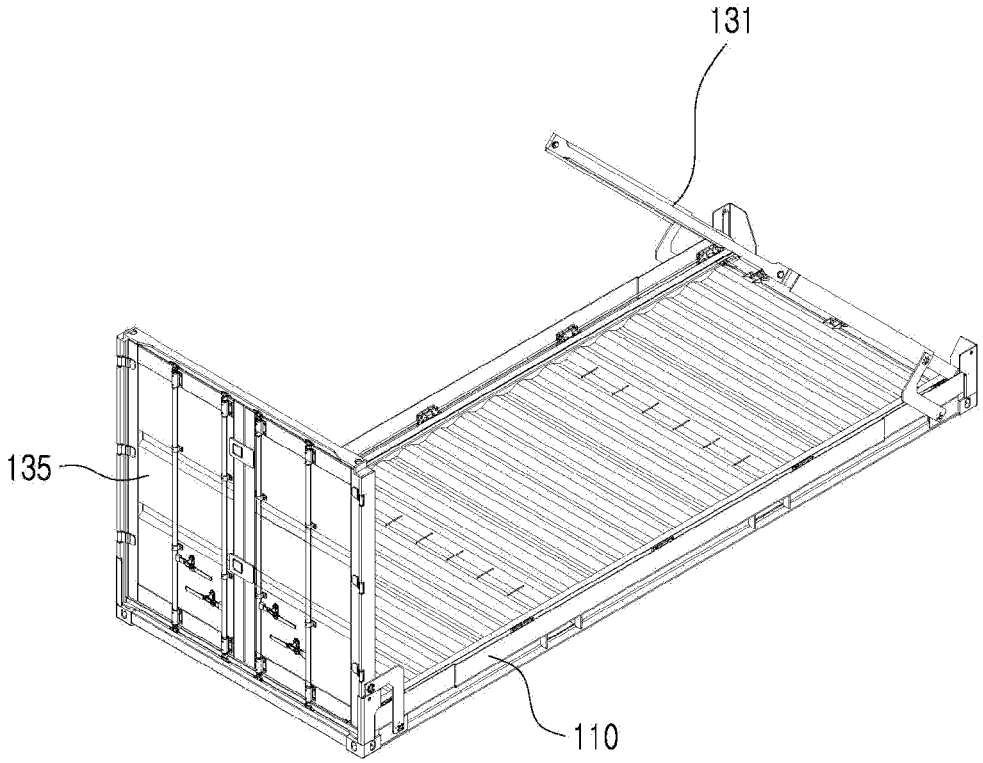

FIG. 6

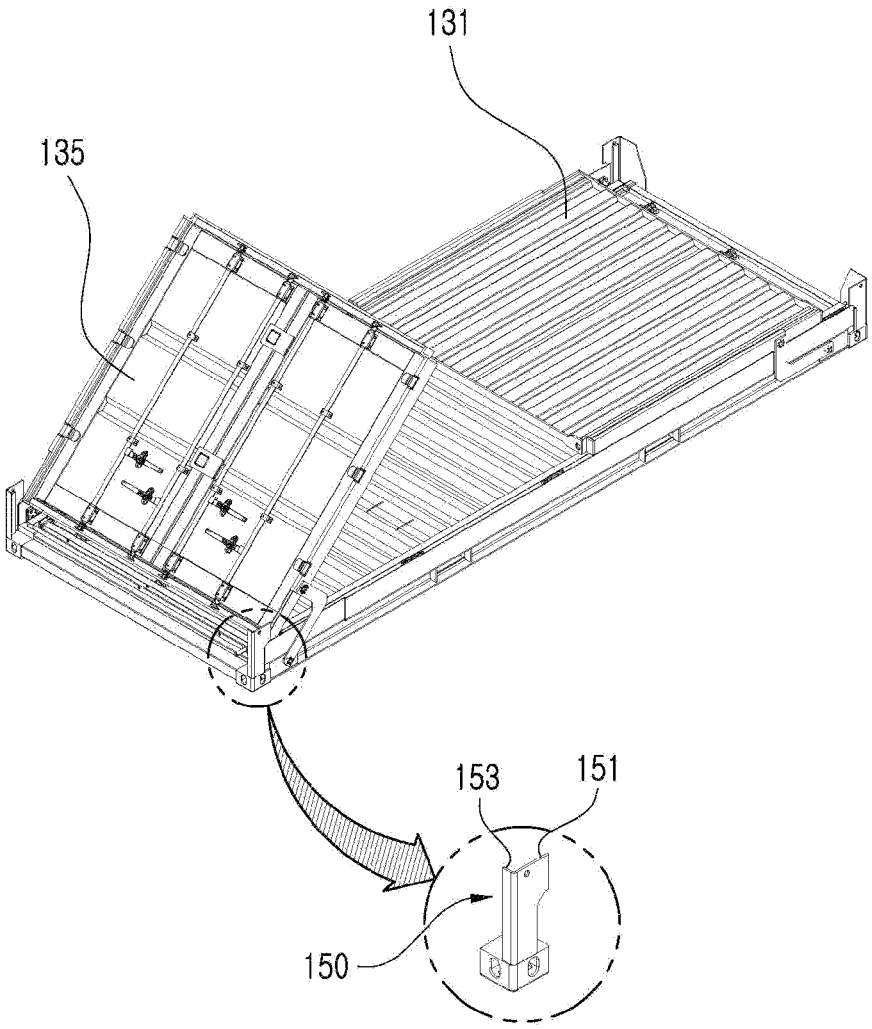

FIG. 7

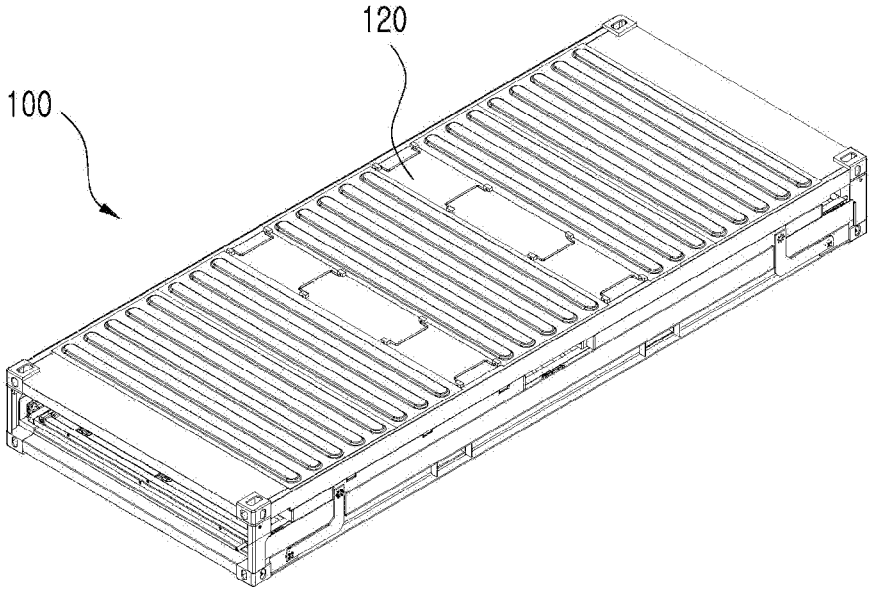

FIG. 8

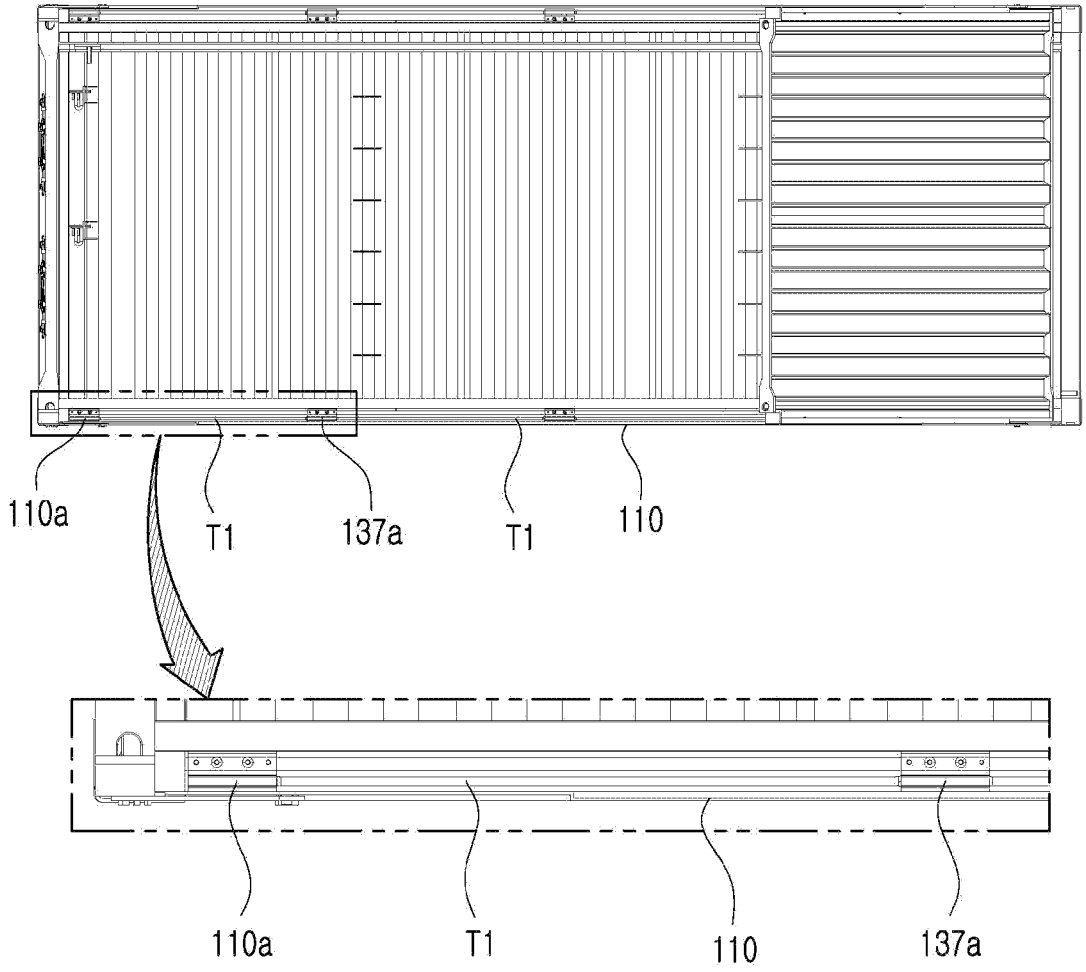

FIG. 9

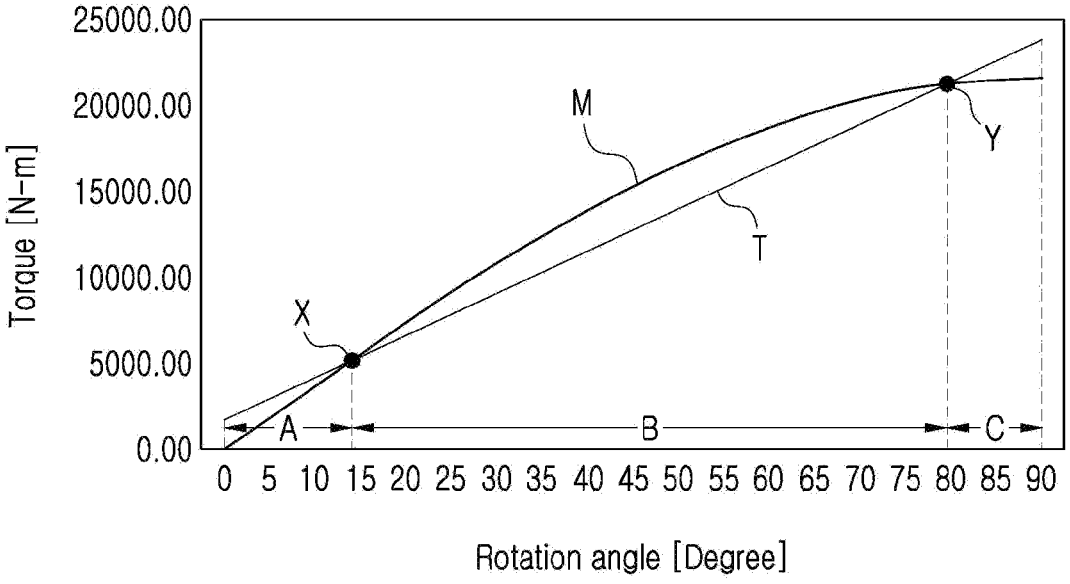
25000.00
20000.00
15000.00
10000.00
5000.00
0.00
Torque [N-m]
M
Y
T
X
A
B
C
0 5 10 15 20 25 30 35 40 45 50 55 60 65 70 75 80 85 90
Rotation angle [Degree]

FIG. 10

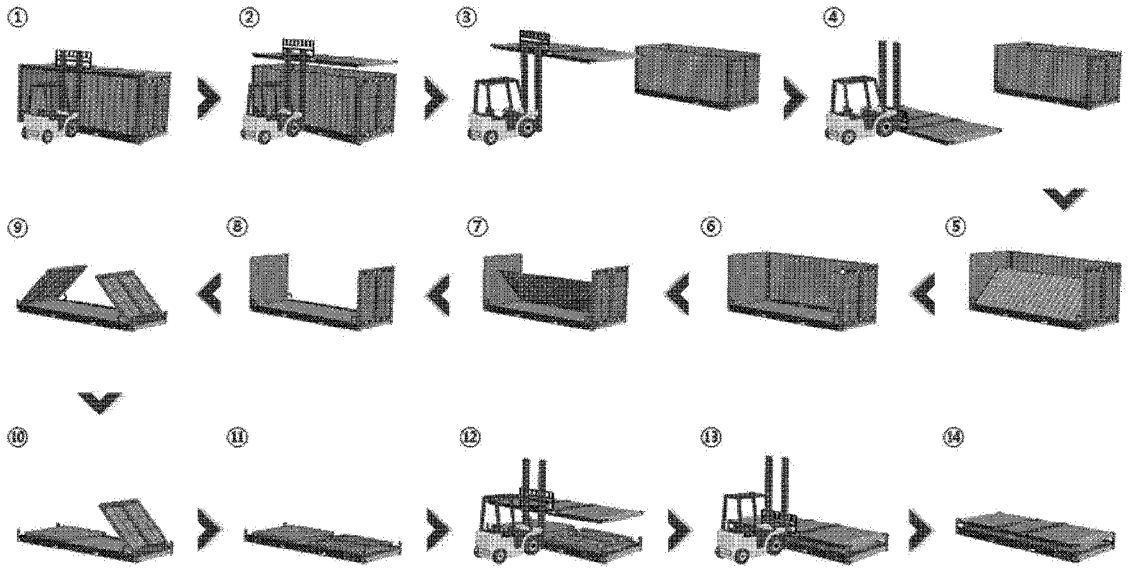
①
②
③
④
⑤
⑥
⑦
⑧
⑨
⑩
⑪
⑫
⑬
⑭

FIG. 11

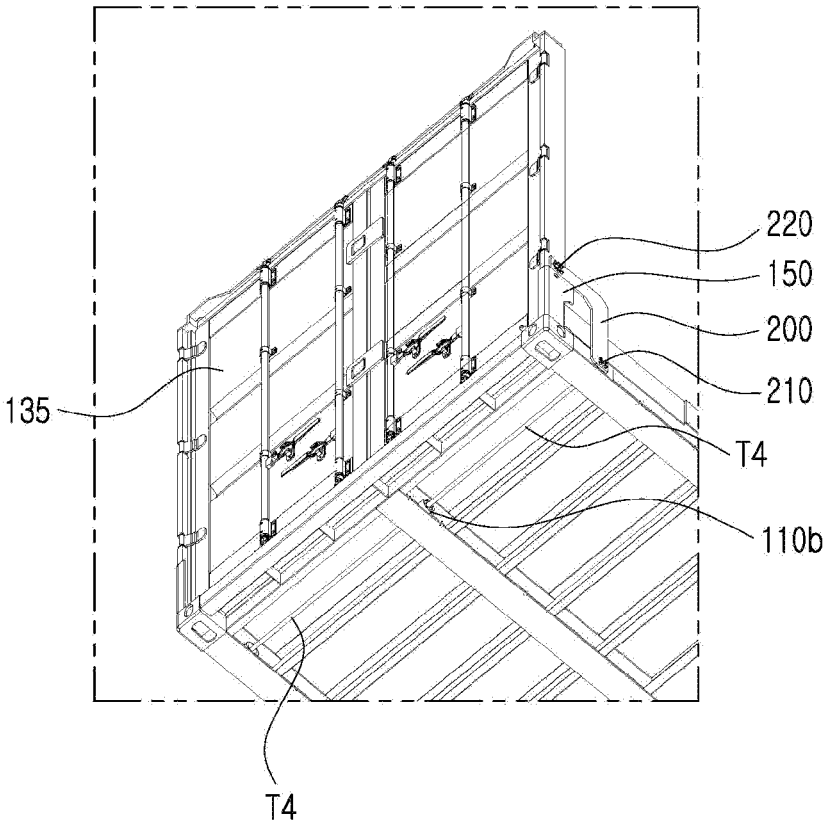

FIG. 12

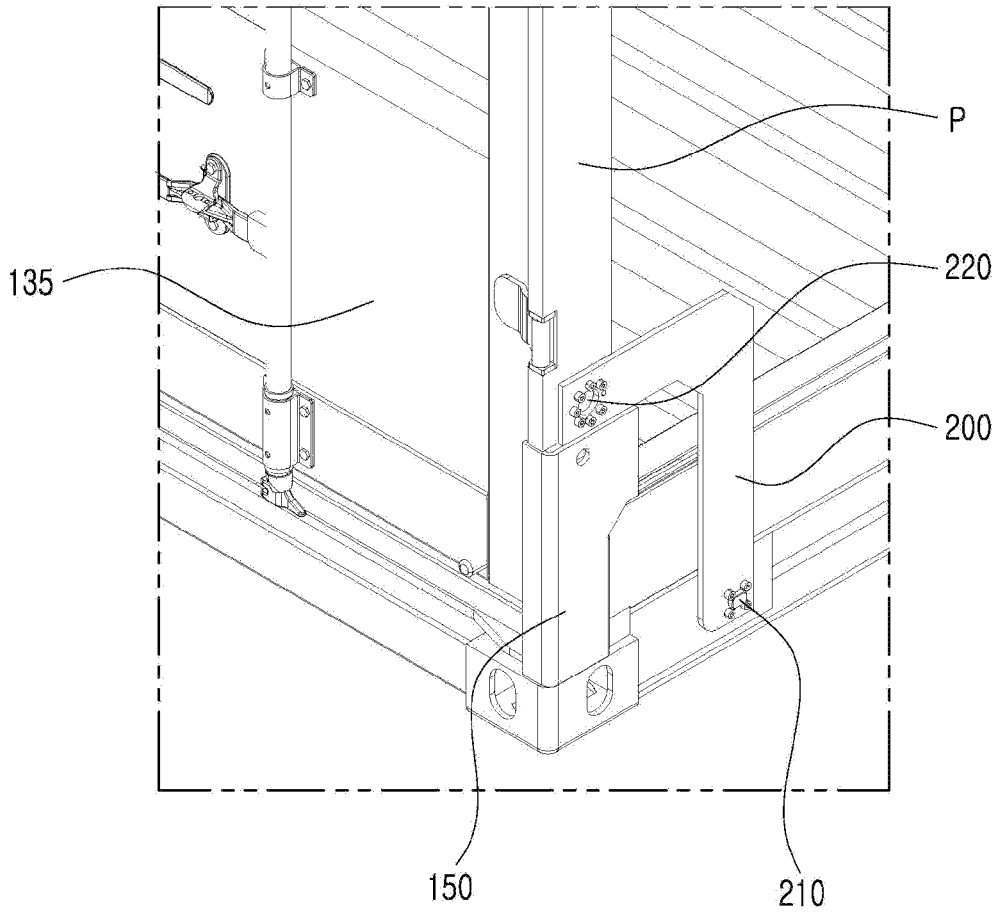

FIG. 13

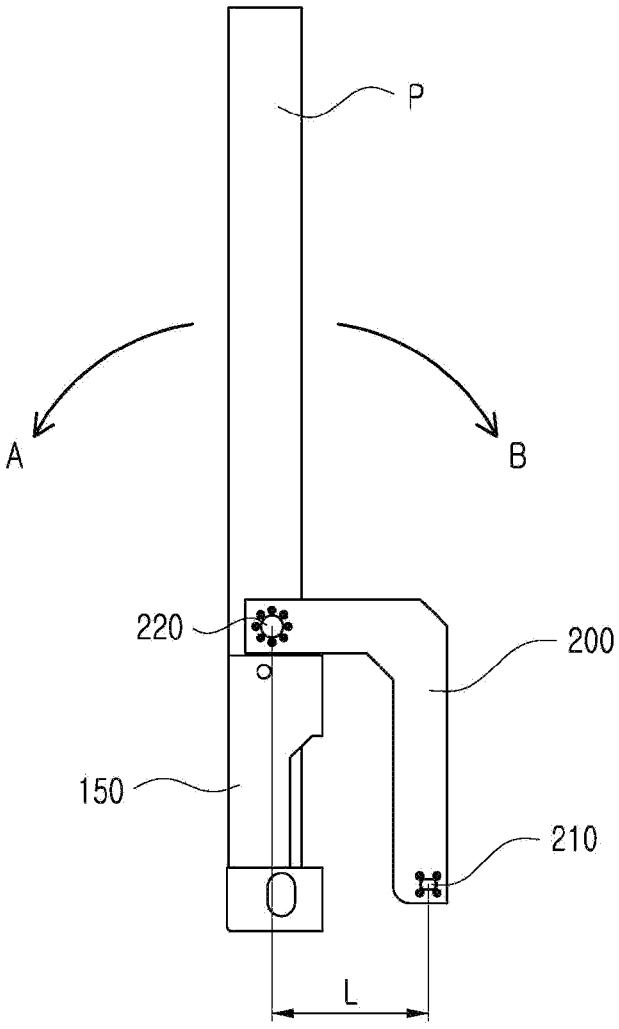

FIG. 14

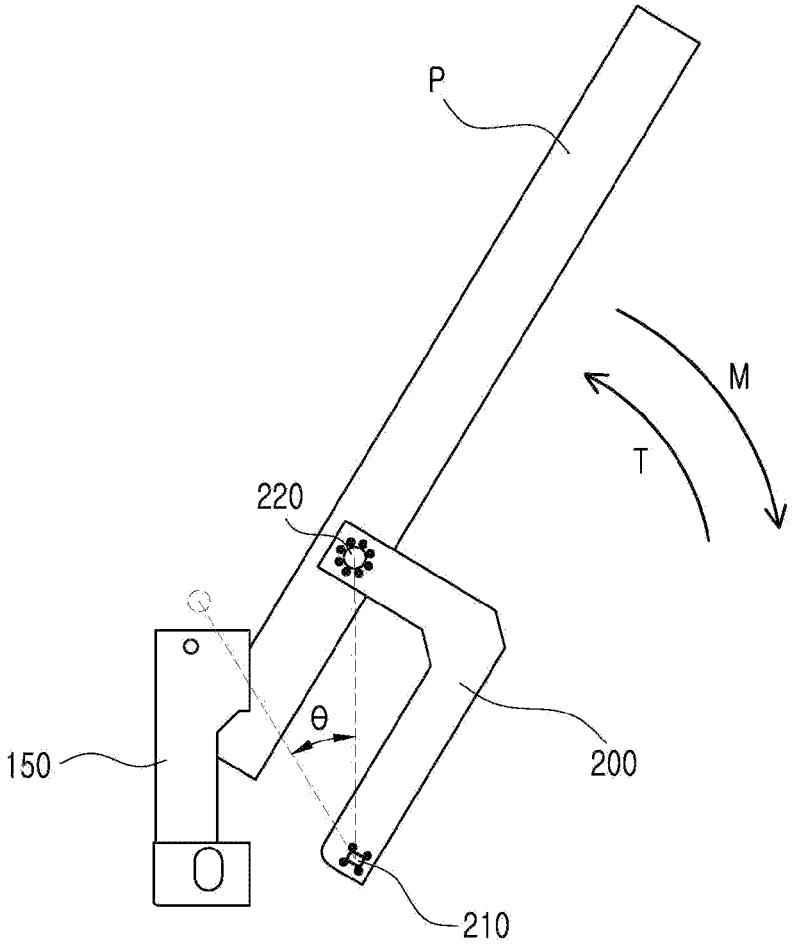

FIG. 15

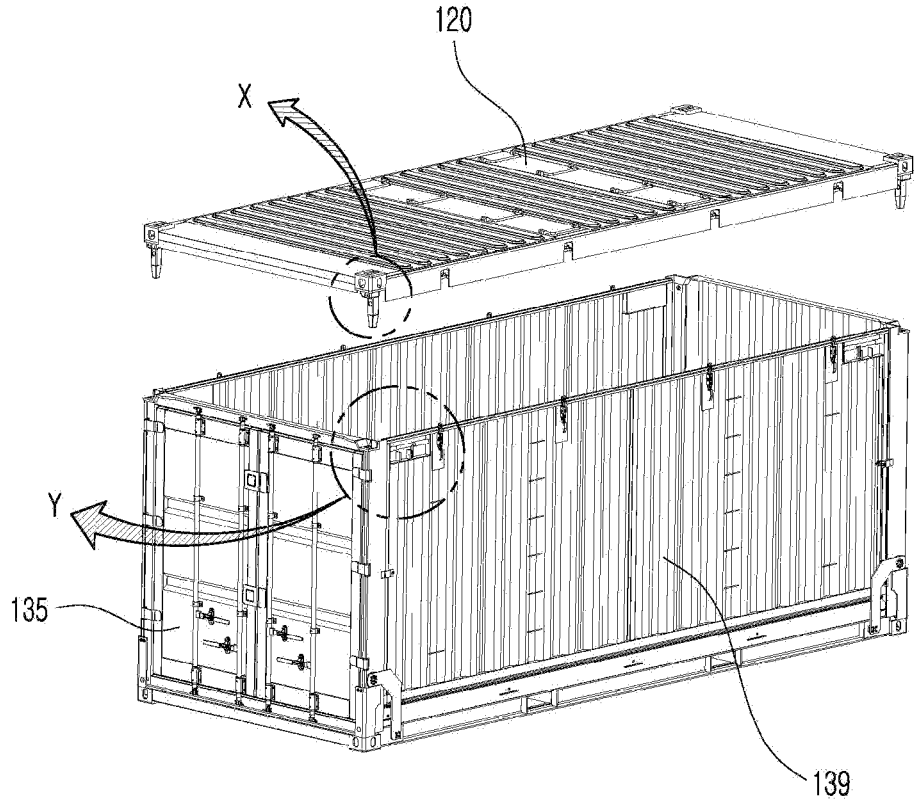

FIG. 16

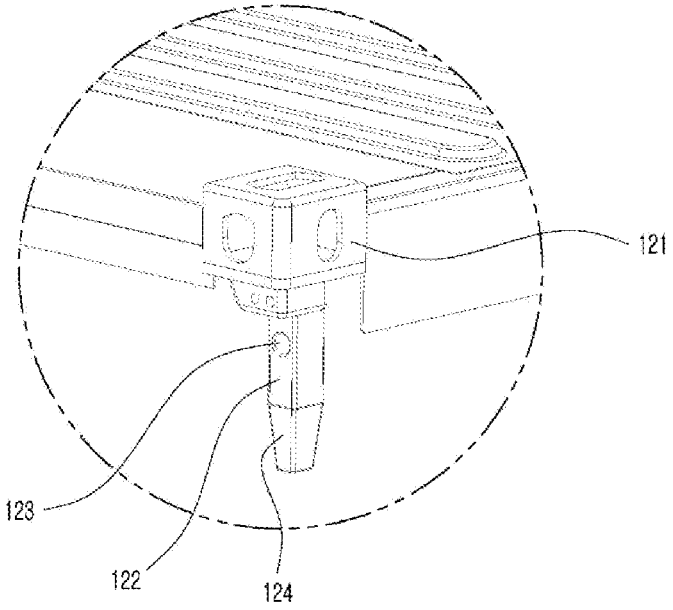

FIG. 17

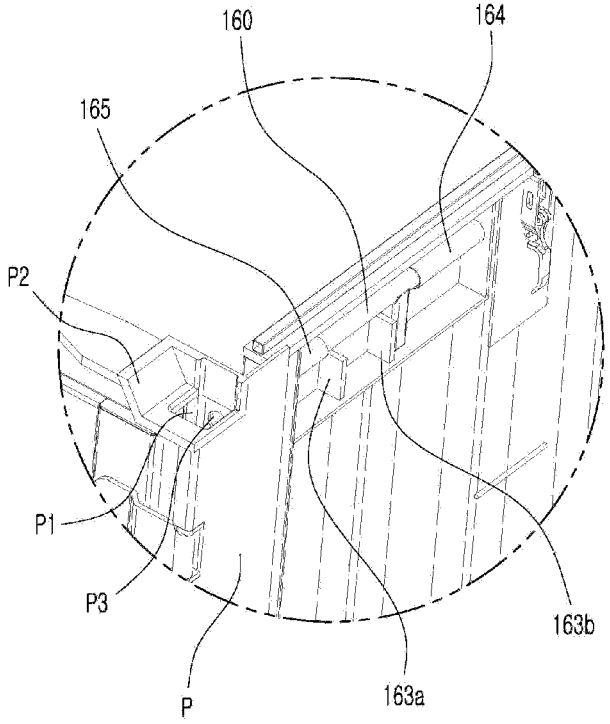

FIG. 18

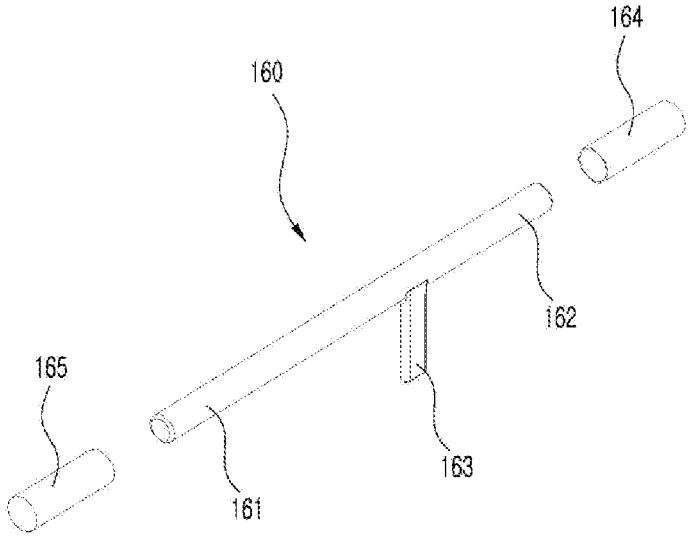

FIG. 19

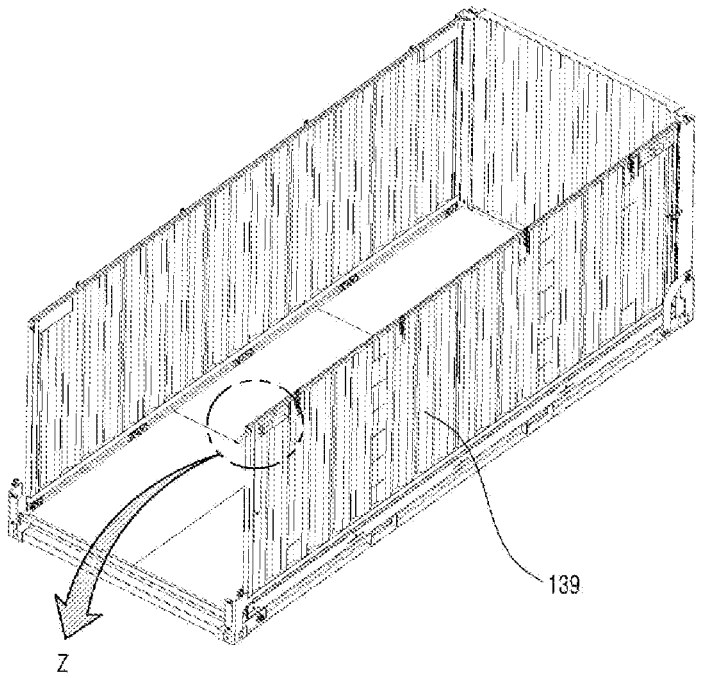

FIG. 20

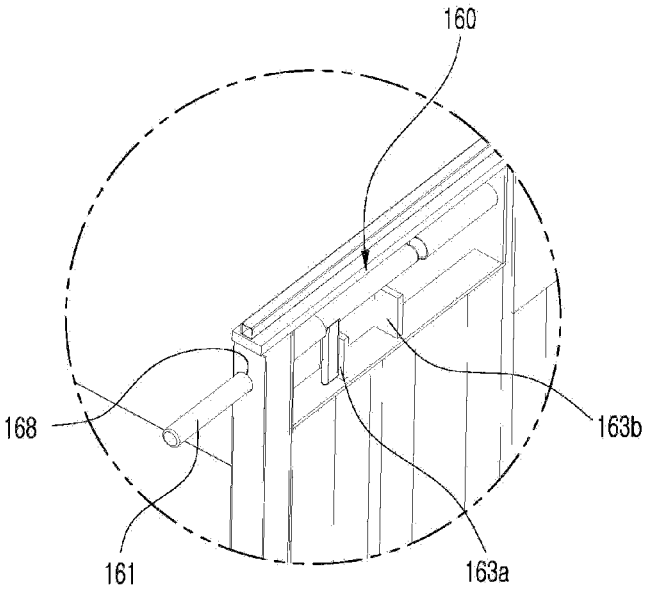

FIG. 21

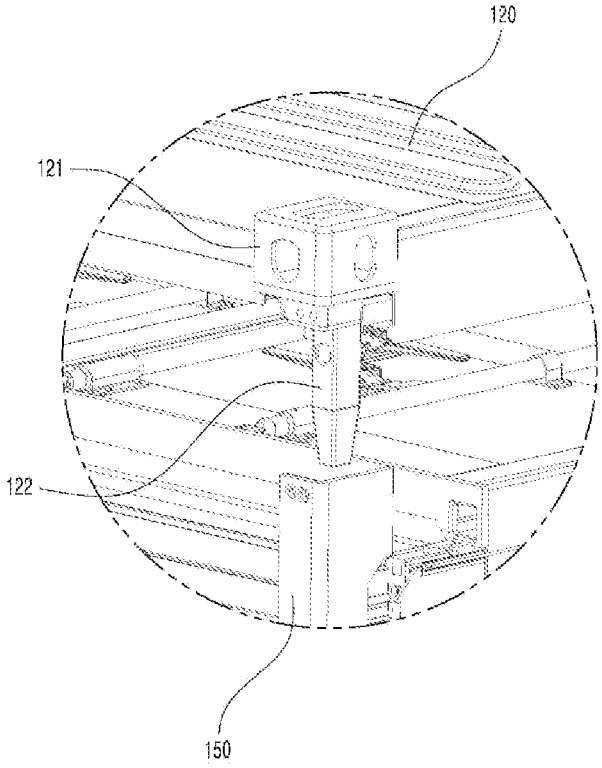

FOLDABLE CONTAINER HAVING CORNER LOCKING STRUCTURE

BACKGROUND

Technical Field

[0001] The present disclosure relates to a structure for firmly coupling a corner of a top plate of a foldable container that can be folded by use of a torsion bar, and specifically, in a foldable container that has a torsion bar at a lower end of a side wall panel of the container and can be folded by removing a top panel and easily folding the side wall panel in that state, and then re-coupling the top panel, to a technology for firmly locking a corner to firmly maintain the container in a stand-up state.

Background Art

[0002] In general, a container has a shape of a large box formed of metal plates and is mainly used for cargo transportation. Such a container is sized according to a certain standard and is widely used for its advantage that it not only allows ease of cargo storage and transport, but also can protect the cargo loaded therein. Containers are transported individually by dedicated large cargo vehicles or transported in large quantities by a dedicated train or a dedicated vessel. However, when transported by the modes of transport, whether the containers are loaded with cargo or empty without cargo therein, they occupy the same space of transport.

[0003] Therefore, when the containers without the cargo loaded therein are transferred to another place or stored in a certain place, the containers in their fixed volume cause a problem that they unnecessarily occupy a large volume, thus taking a large amount of transportation space and transportation costs. In other words, after the containers loaded with the cargo have transported the cargo, when they are stored or retrieved in empty state, the containers with such invariable volume take up a large amount of space and costs for storage and transportation.

[0004] In particular, when transferring a container using a large cargo vehicle, since one container is mounted on one cargo vehicle and transported, transportation efficiency may decrease and transportation cost may greatly increase. In addition, since the container occupies a very large amount of space, when several containers are stacked, there is a risk of an accident due to the height of the stacked containers.

[0005] In order to improve this, in the related art, a foldable container that can save stacking space and can be folded for easy and convenient transportation of empty containers has been disclosed.

[0006] A foldable container according to the related art has been disclosed in Korean Patent Publication No. 10-1064803, Korean Patent Publication No. 10-1439073, and Korean Patent Publication No. 10-1489626. Referring to these, both side plates between the bottom plate and the roof plate are configured as an upper plate and a bottom plate, in which the upper plate and the bottom plate, the upper plate and the roof plate, and the bottom plate and the bottom plate are pivotally coupled to each other by a plurality of hinge devices so as to be folded to each other.

[0007] Such a hinge device is configured to include hinge blocks provided on each of the plates folded to each other, and connection blocks for connecting these hinge blocks, in which the hinge blocks and the connection blocks are hingedly coupled through hinge pins respectively.

[0008] However, since the foldable container according to the related art includes, for the hinge device, the hinge blocks installed on each of the plates to be folded to each other, the connecting blocks connecting the respective hinge blocks, and the hinge pins that hingedly couple the respective hinge blocks and the connecting blocks, there are shortcomings that the entire structure of the hinge device is complex, heavy, and not easy to manufacture and mount.

SUMMARY

Technical Problem

[0009] In order to solve the problems of the related art described above, an object of the present disclosure is to provide a structure that allows the side walls of a foldable container to be easily folded by manpower.

[0010] In addition, another object of the present disclosure is to provide a method of folding a side wall of a container while a top plate is removed, with a structure for folding a side wall of a container, in which the method includes placing a torsion bar at a lower end of a side wall panel and utilizing the torque of the torsion bar to allow the side wall to be smoothly folded.

[0011] Further, another object of the present disclosure is to provide a structure capable of firmly fixing an upper corner portion of a side wall while the container is in an unfolded state such that the container can be stably maintained in the unfolded state.

Technical Solution

[0012] A foldable container is provided, which includes a bottom plate; a top plate; and side wall panels including a front panel, a rear panel, and a side panel provided between the bottom plate and the top plate, in which the top plate is completely detachably coupled to the side wall panel, and the container includes: posts P provided on both sides of the front panel and the rear panel in a vertical direction to bear a load of the container; torsion bars provided at lower ends of the side panel, the front panel, and the rear panel, respectively; and a corner locking structure that couples the top plate, the rear panel, and the side panel at an upper corner, in which the corner locking structure further includes: a corner casting protrusion protruding downward from a lower end of a corner casting of a corner of the top plate; a first coupling hole **123** penetrating the corner casting protrusion in a transverse direction; a post coupling hole P**1** provided at an upper end of the post and into which the corner casting protrusion is inserted; a second coupling hole P**3** penetrating the post coupling hole in the transverse direction; and a corner locking member **160** provided on the side panel and inserted into the first coupling hole **123** and the second coupling hole P**3** to couple the top plate, the rear panel, and the side panel.

[0013] The corner locking structure further includes: a tapered portion **124** provided under the corner casting protrusion and decreasing in a width; and an inclined surface P**2** provided on a side surface of the post coupling hole and guiding the corner casting protrusion to be inserted into the post coupling hole.

[0014] The corner locking member **160** includes cylindrical horizontal members **161** and **162**, and a handle **163** vertically connected to the horizontal members.

[0015] The corner locking structure further includes: a first cylindrical portion **165** having a hollow shape into which one end of the horizontal member is inserted; a second cylindrical portion **166** having a hollow shape into which the other end of the horizontal member is inserted; and a first handle position guide **163***a* and a second handle position guide **163***b* guiding a position of the handle, in which the first cylindrical portion, the second cylindrical portion, the first handle position guide, and the second handle position guide are provided by being fixedly coupled to the side panel, the corner locking structure further includes a third coupling hole **168** that is a through hole provided in the side panel in a transverse direction, and the corner locking member is inserted into the first coupling hole **123**, the second coupling hole P**3** and the third coupling hole **168**.

Advantageous Effects

[0016] According to the present disclosure, with the structure described above, after the top plate of the container is removed with a forklift, the side wall panel can be easily folded simply by manpower and the height can be reduced by **1**/**4** in the folded state such that four containers can be folded and stacked, and thus the effects of easy storage and movement of the containers are provided.

[0017] In addition, there is an advantageous effect that the upper corner is stably and firmly coupled while the container is in the stand-up state.

BRIEF DESCRIPTION OF THE DRAWING

[0018] FIG. **1** illustrates an overall appearance of a foldable container according to the present disclosure.

[0019] FIG. **2** illustrates the foldable container from which a top plate is removed according to the present disclosure.

[0020] FIG. **3** illustrates a first side panel of the foldable container being folded according to the present disclosure.

[0021] FIG. **4** illustrates a second side panel of the foldable container being folded according to the present disclosure.

[0022] FIG. **5** illustrates a front panel of the foldable container being folded according to the present disclosure.

[0023] FIG. **6** illustrates a rear panel of the foldable container being folded according to the present disclosure.

[0024] FIG. **7** illustrates the foldable container fully folded according to the present disclosure.

[0025] FIG. **8** illustrates a structure of a torsion bar provided in a longitudinal direction on a bottom plate of the foldable container according to the present disclosure.

[0026] FIG. **9** is a graph showing the relative magnitudes of a moment and a torque according to the present disclosure, in which the moment is generated based on the weights of the first and second side panels of the foldable container during folding, and the torque is generated by the torsion bar.

[0027] FIG. **10** illustrates the overall process of folding and unfolding the foldable container according to the present disclosure.

[0028] FIG. **11** illustrates a partial lower portion of the bottom plate of the foldable container according to the present disclosure.

[0029] FIG. **12** illustrates a rotation support member of the foldable container according to the present disclosure.

[0030] FIGS. **13** and **14** are explanatory diagrams illustrating the operating principle of the rotation support member and the torsion bar of the foldable container according to the present disclosure.

[0031] FIG. **15** illustrates a corner locking structure of the foldable container according to another embodiment of the present disclosure.

[0032] FIG. **16** is an enlarged view of a portion X of FIG. **15**.

[0033] FIG. **17** is an enlarged view of a portion Y of FIG. **15**.

[0034] FIG. **18** illustrates a corner locking member provided in the foldable container according to the present disclosure.

[0035] FIG. **19** illustrates the foldable container from which a top plate and a rear panel are removed to help understand the corner locking structure according to the present disclosure.

[0036] FIG. **20** is an enlarged view of a portion Z of FIG. **18**.

[0037] FIG. **21** illustrates the corner locking structure immediately before the foldable container completes a folding operation according to the present disclosure.

BEST MODE

[0038] FIG. **1** illustrates an overall appearance of a foldable container according to the present disclosure, in which the side wall panel of the container is in a vertically unfolded state, which will be referred to herein as a "stand-up state" or an "unfolded state" for convenience. FIG. **2** illustrates the foldable container from which a top plate is removed according to the present disclosure, FIG. **3** illustrates a first side panel of the foldable container being folded according to the present disclosure, FIG. **4** illustrates a second side panel of the foldable container being folded according to the present disclosure, FIG. **5** illustrates a front panel of the foldable container being folded according to the present disclosure, FIG. **6** illustrates a rear panel of the foldable container being folded according to the present disclosure, and FIG. **7** illustrates the foldable container fully folded according to the present disclosure, which will be referred to herein as a "folded state" for convenience. FIG. **8** illustrates a structure of a torsion bar provided in a longitudinal direction on a bottom plate of the foldable container according to the present disclosure, FIG. **9** is a graph showing the relative magnitudes of a moment and a torque according to the present disclosure, in which the moment is generated based on the weights of the first and second side panels of the foldable container during folding and the torque is generated by the torsion bar, and FIG. **10** illustrates the overall process of folding and unfolding the container. It is designed such that the use of a forklift is necessary only in the process of removing or lifting the top plate, while all other operations are possible with human power. Since the forklift is present anywhere in the field where containers are loaded or moved, even when there are some operations that use the forklift, it will not cause any problem in the efficiency of work.

[0039] [Foldable Container Structure and Folding Method]

[0040] A foldable container of the present disclosure (hereinafter, it may be referred to as "container") has a bottom plate **110**, a top plate **120** spaced apart above the bottom plate **110**, and a side wall panel **130** vertically

installed on a side between the bottom plate **110** and the top plate **120**. The side wall panel **130** includes four vertically-arranged panels, which will be referred to as a front panel **131**, a rear panel **135**, a first side panel **137**, and a second side panel **139**, respectively. Posts P for bearing the load of the container in the vertical direction are provided on edges of the rectangles of the front panel **131** and the rear panel **135**, respectively. The first and second side panels are collectively referred to as a side panel.

[0041] The feature of the foldable container according to the present disclosure is that the four side wall panels **130** can be simply folded by manpower using a torsion bar provided at the lower end, while the top plate **120** is completely removed using a forklift. That is, when the side wall panel is folded by the moment due to its self weight, the torque generated from the twisting torsion bar applies a rotational force opposite to the moment due to self weight, thereby allowing the it to be folded smoothly.

[0042] First, a method for folding a container according to the present disclosure will be described.

[0043] For the container of the present disclosure, the process of lifting the top plate **120** using a forklift is performed. A plurality of coupling members **125**, to which the forks of the forklift are inserted and coupled, are provided on the top plate, that is, on an upper surface of the top plate of the container in a transverse direction. Hereinafter, the transverse direction of the container refers to the width direction of the container, and the longitudinal direction of the container refers to the direction from the front panel toward the rear panel. In addition, FIG. **2** illustrates the top plate completely lifted up by the forklift (illustration of the forklift is omitted for convenience of description). The characteristic of the present disclosure is that the top plate **120** is first completely separated from the side wall panel **130** by the forklift, as illustrated in FIG. **2**. This is completely different from the related art where the folding operation is performed with the top plate remaining attached to the side wall panel. The top plate removed by the forklift is moved to the side of the container and positioned.

[0044] Then the first side panel **137** is folded as illustrated in FIG. **3**, and the second side panel **139** is folded over the first side panel **137** as illustrated in FIG. **4**. According to the present disclosure, in order to fold the first and second side panels, first and second torsion bars T**1** and

[0045] T**2** are positioned under the first and second side panels. This will be described with reference to the detailed illustration in FIG. **8**. Since the first side panel and the second side panel are folded by the same principle as each other and it is also the same that four of the first and second torsion bars are arranged along the longitudinal direction of the container, only the process of folding the first side panel will be described below as an example.

[0046] Referring to FIG. **8**, there is provided a fixture **110***a* that is fixedly coupled to the bottom plate **110** of the container so as not to rotate in the process of folding (or rotating) of the first side panel **137**. The fixture **110***a* is fixed to a frame of the bottom plate and not rotated. In addition, there is provided a rotating body **137***a* that is fixedly coupled to the first side panel **137** and rotated together when the first side panel is rotated. In this example, the "rotation" means an operation of pivoting of the side wall panel based on the lower end in order to be folded. In addition, one end of the first torsion bar T**1** is coupled by serration to the fixture **110***a* and the other end is coupled by serration to the rotating body **137***a*. When the first side panel **137** is rotated to be folded, the rotating body **137***a* is rotated, and as a result, the first torsion bar T**1** is twisted and rotational elastic energy is accumulated (this is referred to as "torsion bar torque" for convenience). The torsion bar torque applies a rotational force in the direction opposite to the rotational force direction of the moment generated by the self weight of the first side panel, thereby preventing the first side panel from being suddenly folded by the self weight, while ensuring a smooth folding operation.

[0047] The principle of the rotation of the first side panel, the torque of the first torsion bar, and the like will be separately described in detail in the [Rotation Operation of Side Panel and Torsion Bar] provided below.

[0048] FIG. **5** illustrates the front panel of the foldable container being folded according to the present disclosure, and FIG. **6** illustrates the rear panel of the foldable container being folded according to the present disclosure.

[0049] According to the present disclosure, in order to fold the front and rear panels, third and fourth torsion bars T**3** and T**4** are positioned under the front and rear panels. Since the third torsion bar positioned under the front panel and the fourth torsion bar positioned under the rear panel have the same principle of operation during rotation, and the third torsion bar and the fourth torsion bar are the same that two are arranged along the transverse direction of the container, only the process of folding the rear panel **135** will be described below as an example. Meanwhile, the principle of the rotation of the rear panel, the torque of the fourth torsion bar, and the like will be separately described in detail in the [Rotation Operation of Rear Panel and Torsion Bar] provided below.

[0050] FIG. **7** illustrates the top plate **120** is placed by a forklift onto the top of the container in the fully folded state, which will be referred to herein as a "folded state" for convenience. In order to place the top plate **120** in the correct position in the folded state, in the present disclosure, L-shaped corner support members **150** positioned at four corners of the bottom plate **110** are adopted.

[0051] Referring to FIG. **6**, the corner support members **150** are L-shaped members formed at the four corners of the bottom plate **110**, and have a first support surface **151** and a second support surface **153** that are perpendicular to each other. The corner support members **150** serve to support, from the outside, the corner ends of the posts P of the front panel and the rear panel when the container is in the stand-up state, and serve to support the four corners of the top plate **120** placed on the container when the container is in the folded state.

[0052] [Rotation Operation of Side Panel and Torsion Bar]

[0053] The structure of the torsion bar of FIG. **8** and the graph of FIG. **9** will be described. The graph of FIG. **9** shows the moment M generated by the self weight of the container in the process of changing the rotation angle of the bottom plate **110** from 0° to 90°, and the torsional elastic energy resulting from the rotation of the first torsion bar, that is, the torsion bar torque T. In the graph, the horizontal axis represents the rotation angle of the first side panel of the container, and the vertical axis represents the torque. Referring to the graph, the relationship of the moment and the torque according to the angle in the rotation process is divided into three sections: Section A, Section B, and Section C.

[0054] Section A is a process of starting the folding operation of the side wall of the container, and in this section, the torsion bar torque T is formed to be greater than the moment M generated by the self weight of the container. This can be achieved by mounting the first torsion bar T**1** that is twisted at a predetermined angle in a reverse direction in advance, while the first side panel **137** is in the stand-up position. That is, the first torsion bar is twisted by a predetermined angle (about 7° in the present disclosure) in advance in the reverse direction to the direction in which the first torsion bar will be twisted as the first side panel is rotated (This will be referred to herein as "preliminary torque" for convenience). The reason for doing this is to allow the first side panel in the stand-up state to receive torque by the torsion bar in a reverse direction to the folding direction such that it can be maintained in a stable stand-up state. That is, this is to prevent the first side panel **137** from being suddenly rotated and collapsed from the stand-up state. In this example, for the folding operation of the first side panel, it is necessary to apply a force from the outside, and to be specific, the force needs to be applied up to an angle corresponding to the point X in the graph. In the present disclosure, by selecting a torsion bar of an appropriate specification, and the like, the amount of necessary force is appropriately adjusted so as to allow a rotation up to the X point by pushing only with human force.

[0055] Section B is a section in which the moment M due to the self weight of the first side panel is greater than the torsion bar torque T, and is a section in which the folding operation is performed by the self weight without requiring a separate external torque. However, the smaller the difference between the moment M and the torsion bar torque T in this section (the smaller the size of the arrow in the B section of the graph), the smoother the first side panel folds.

[0056] Section C is a process in which the rotation operation of the first side panel is finished, and in this section, the torsion bar torque T is slightly larger than the moment M generated by the self weight. That is, while it requires additional external force to achieve the fully folded state, because the additional external force is small, it is sufficient for a human to press the first side panel from above.

[0057] According to the present disclosure, the torque value of the torsion bar is appropriately selected in consideration of the magnitude of the moment value generated by the self weight of the side wall panel, such that the external power (torque) is required only at the beginning and the end of the folding operation, and the size of the required external power is also sufficiently adjustable by human power.

[0058] According to the present disclosure, even when the top plate is removed, the first side panel maintains the vertical position in a self-supporting state due to the preliminary torque of the torsion bar itself. Then, it requires only a little external force to rotate it to the X point, after which the rotation operation is automatically performed by the self weight of the side panel. Then, it requires a human to apply the external force only in the last predetermined section of the rotation operation to make the folded state. In the present disclosure, the points X and Y were appropriately selected in order to provide the necessary preliminary torque while reducing Section B, that is, reducing the size of the arrow.

[0059] [Rotation Operation of Rear Panel and Torsion Bar]

[0060] FIG. **11** illustrates a partial lower portion of the bottom plate of the foldable container according to the present disclosure, and illustrates the lower portion adjacent to the rear panel **135**. FIG. **12** illustrates a rotation support member according to the present disclosure, and FIGS. **13** and **14** are explanatory diagrams illustrating the operating principle of the rotation support member and the torsion bar.

[0061] In general, since most of the vertical load of the container is born by the post (P in FIG. **12**) positioned on the side of the front panel **131** and the rear panel **135**, the strength of the front panel **131** and the rear panel **135** is important, and therefore, the load they receive is much greater than that of the first and second side panels. Therefore, in order to enable the rotation operation of the front panel and the rear panel by human force, the torsion bar provided for this and its arrangement structure are important. According to the present disclosure, in order to rotate the front panel **131** and the rear panel **135**, the third and fourth torsion bars T**3** and T**4** are provided. Since the front panel **131** and the rear panel **135** are the same as each other in both the rotation operation and the principle, the rear panel **135** and the fourth torsion bar T**4** will be described below as an example.

[0062] Two of the fourth torsion bars T**4** are arranged side by side on the bottom plate **110** of the container in the transverse direction, and only one of them is illustrated in FIG. **11**. One end of the fourth torsion bar T**4** is coupled by serration to a fixed coupling part **110***b* fixed to the frame of the bottom plate **110**, and the other end of the fourth torsion bar is coupled to a rotation support member **200** while passing through the outer frame of the bottom plate.

[0063] The rotation support member is an L-shaped member, with one end being coupled to a post coupling point **220** at the post P spaced apart from the lower end of the rear panel by a predetermined distance, and the other end being coupled to the fourth torsion bar T**4** at a bottom plate coupling point **210** located on the side spaced apart from the end of the bottom plate by a predetermined distance (it is fixedly coupled using a separate connecting member between the fourth torsion bar and the other end). The corner of the post P is supported from the outside by the corner support member **150**.

[0064] As described above, the rear panel and the front panel are subjected to a greater load than the side panel, while the width of the container in the transverse direction is smaller than the length in the longitudinal direction, and accordingly, since the third and fourth torsion bars must have higher torsional torque, in consideration of the lifespan of the third and fourth torsion bars and also the load of the front panel and the rear panel, the present disclosure adopts the L-shaped rotation support member for their rotation operation.

[0065] Referring to the rotation operation of the rear panel **135**, the rotation operation is performed based on the third torsion bar located on the side spaced apart from the end of the bottom plate by a predetermined distance as the reference axis, which is different from the rotation of the side panel that is performed based on the axis located immediately thereunder. The rotation support member has the following roles and functions.

[0066] [Ensuring Stability]

[0067] In the description of the rotation operation of the side panel, it is described that the first and second torsion bars twisted by a predetermined angle in advance are

mounted to provide the "preliminary torque" in order to ensure stability (to prevent the side panel from being suddenly rotated and collapsed from the stand-up state).

[0068] However, stability is ensured by the rotation support member **200** without requiring the "preliminary torque" to be applied to the fourth torsion bar T**4** involved in the rotation of the rear panel.

[0069] That is, in FIG. **13**, the rear panel is supported by the corner support member **150** supporting the outer corner of the lower end thereof, so that the rotation in the direction of the arrow A is constrained, and further, the rotation in the direction B is also constrained by the rotation support member **200** and its self load (that is, in the absence of the rotation support member, rotation occurs in the direction B). For the side panel, the preliminary torque is applied to the torsion bar to prevent the inward folding operation, but for this rear panel, even when the preliminary torque is not applied to the torsion bar, the rotation operation is kept from occurring, thereby ensuring stability. In other words, in order for the rear panel **135** to be rotated inward, it requires to apply the external force up to the point where the post coupling point **220** is located directly above the bottom plate coupling point **210**, and therefore, the rear panel is maintained in a stable state unless the external force is applied (FIG. **14**). In the actual operation of folding the rear panel, the rear panel is rotated by pushing from the outside by the power of a human by the angle θ shown in FIG. **14**. When the rear panel is rotated beyond the angle shown in FIG. **14**, the rear panel is gently folded by the mutual relationship between the moment M by the self weight of the rear panel and the torsion bar torque T by the fourth torsion bar, which has already been described with reference to the folding operation of the side panel.

[0070] [Ensuring Durability of Torsion Bar]

[0071] Since it is difficult to expect the effect of torsional elastic energy any more when the twist angle of the torsion bar exceeds the point where plastic deformation occurs, the torsion bar should be twisted only at an angle below which plastic deformation does not occur, and even at an angle at which plastic deformation does not occur, it is still advantageous to prevent excessive twisting in consideration of the lifespan.

[0072] It has been described that according to the present disclosure, stability is ensured by the rotation support member **200** even without the "preliminary torque" applied to the fourth torsion bar of the container. This has the effect of reducing the amount of twist of the fourth torsion bar as a result. For example, when a 7° torsion angle is provided in the initial state (side panel stand-up state) to provide the preliminary torque to the side panel, in the folded state in which the side panel is completely rotated by 90°, there is the effect that the first and second torsion bars have a torsion angle of 97°.

[0073] Meanwhile, according to the present disclosure, the fourth torsion bar of the rear panel does not have a preliminary torque due to the existence of the rotation support member **200**, and the fourth torsion bar is in a state where there is no torsion in the state illustrated in FIG. **14** (in this state, the post coupling point **220** is located directly above the bottom plate coupling point **210**). In this state, when the rear panel is completely rotated and folded, the twist angle of the fourth torsion bar is (90−θ), and the maximum twist angle is significantly reduced. This leads to the effect of increasing the life of the fourth torsion bar.

[0074] The rotation support member is provided equally on the front panel and the rear panel, and includes a first rotation support member coupled to the front panel and a second rotation support member coupled to the rear panel.

[0075] [Upper Corner Locking Device]

[0076] FIG. **15** illustrates a corner locking structure of the foldable container according to another embodiment of the present disclosure, FIG. **16** is an enlarged view of a portion X of FIG. **15**, FIG. **17** is an enlarged view of a portion Y of FIG. **15**, FIG. **18** illustrates a corner locking member provided in the foldable container according to the present disclosure, FIG. **19** illustrates the foldable container from which a top plate and a rear panel are removed to help understand the corner locking structure according to the present disclosure, FIG. **20** is an enlarged view of a portion Z of FIG. **18**, and FIG. **21** illustrates the corner locking structure immediately before the foldable container completes a folding operation according to the present disclosure.

[0077] Referring to FIGS. **15** and **16**, corner castings **121** are provided at four corners of the top plate **120**. The corner casting is made of a material that is very strong against impact, and is the most outwardly protruding member to protect other parts, and marine containers are manufactured to satisfy ISO regulations. The present disclosure newly devised a corner locking device in order to firmly couple the upper corner in the process of folding and unfolding the container. According to the present disclosure, since the corner castings **121** have the identical structure at all four corners, in the following description, it will be described with reference to the corner positioned above the post of the rear panel as an example.

[0078] Referring to FIG. **16**, the corner casting **121** is provided at the corner of the top plate **120**, and a corner casting protrusion **122** extending and protruding downward is provided below the corner casting **121**. The corner casting protrusion **122** includes a first coupling hole **123** which is a through-hole penetrating in the transverse direction, and a tapered portion **124** provided thereunder and having an inclined surface of a decreasing width.

[0079] Referring to FIG. **17**, there is provided a post coupling hole P**1** to be mounted with the corner casting protrusion **122**, at an upper end of the post P positioned in the vertical direction at both corners of the rear panel **135**. An inclined surface P**2** is formed on a side surface of the post coupling hole P**1** to serve as a guide to guide the corner casting protrusion **122** when it is moved downward to be inserted into the post coupling hole P**1**. In addition, of the frames forming the post P, the frame on the side panel (the second side panel **139** in the drawing) side includes a second coupling hole P**3** which is a through hole connecting the post coupling hole P**1** and the outside.

[0080] The present disclosure further includes a corner locking member **160** mounted on the upper corner of the second side panel **139**, as illustrated in FIG. **18**. The corner locking member **160** includes long cylindrical horizontal members **161** and **162** and a handle **163** vertically connected to the horizontal member. In addition, the present disclosure includes a first cylindrical portion **165** as a hollow cylindrical member into which one end **161** of the horizontal member is inserted, and a second cylindrical portion **166** as a hollow cylindrical member into which the other end **162** of the horizontal member is inserted, and the first cylindrical portion **165** and the second cylindrical portion **166** are

fixedly coupled to the corner side of the second side panel **139** by welding or the like. In addition, both ends of the corner locking member **160** are inserted into the first cylindrical portion **165** and the second cylindrical portion **166** and locked in position.

[0081] In addition, according to the present disclosure, the container includes a first handle position guide **163***a* and a second handle position guide **163***b*, which are plate-shaped and which protrude from the side panel on the corner side of the second side panel **139** to guide the position of the handle **163**. The first handle position guide **163***a* and the second handle position guide **163***b* serve to guide the handle to where it is to be positioned between when the container is in the upright state and when in the folded state, respectively.

[0082] In addition, referring to FIGS. **19** and **20**, of the frames forming the second side panel **139**, the frame that faces the post P includes a third coupling hole **168** formed therein, which is a through hole. The third coupling hole **168** is a through hole into which one end **161** of the horizontal member of the corner locking member **160** is inserted (see FIG. **20**).

[0083] Hereinafter, the principle of operation of the corner locking device will be described.

[0084] Referring to the drawings, both ends of the corner locking member **160** are inserted into the first cylindrical portion **165** and the second cylindrical portion **166**. When an operator grabs the handle **163** of the corner locking member and moves it to the left side in the drawing, the one end **161** of the corner locking member is passed through the third coupling hole **168**, the second coupling hole P**3**, and the first coupling hole **123** sequentially, coupling the sight panel **139**, the rear panel **135**, and the top plate **120** at the same time (This is the last process of the container unfolding operation, whereby the container is in the stand-up state). In addition, at this time, the handle **163** is positioned on the left side of the first handle position guide **163***a*.

[0085] In addition, in order to fold the container, the operator grabs the handle **163** of the corner locking member and moves it to the right side in the drawing, and accordingly, the one end **161** of the corner locking member sequentially exits from the first coupling hole **123**, the second coupling hole P**3**, and the third coupling hole **168**, resulting in the side panel **139**, the rear panel **135**, and the top plate **120** in a separable state from each other (a preparation process for folding the container). Accordingly, the next folding operation of the container follows, and at this time, the handle **163** is positioned on the right side of the second handle position guide **163***b*.

[0086] Referring to FIG. **21**, as the folding operation is completed, the top plate **120** is lowered, and at this time, the corner casting **121** on the corner of the top plate **120** is positioned above the L-shaped corner support member **150** positioned at the corner of the bottom plate **110**. In addition, the corner casting protrusion **122** extending downwardly below the corner casting **121** enters into the corner support member **150** and accordingly, the folding operation is completed.

What is claimed is:

1. A foldable container comprising: a bottom plate; a top plate; and side wall panels including a front panel, a rear panel, and a side panel provided between the bottom plate and the top plate, wherein the top plate is completely detachably coupled to the side wall panel,

the container comprising: posts (P) provided on both sides of the front panel and the rear panel in a vertical direction to bear a load of the container; torsion bars provided at lower ends of the side panel, the front panel, and the rear panel, respectively; and a corner locking structure that couples the top plate, the rear panel, and the side panel at an upper corner,

wherein the corner locking structure comprises:

a corner casting protrusion protruding downward from a lower end of a corner casting of a corner of the top plate;

a first coupling hole (**123**) penetrating the corner casting protrusion in a transverse direction;

a post coupling hole (P**1**) provided at an upper end of the post and into which the corner casting protrusion is inserted;

a second coupling hole (P**3**) penetrating the post coupling hole in the transverse direction; and

a corner locking member (**160**) provided on the side panel and inserted into the first coupling hole (**123**) and the second coupling hole (P**3**) to couple the top plate, the rear panel, and the side panel.

2. The foldable container according to claim **1**, wherein the corner locking structure further includes:

a tapered portion (**124**) provided under the corner casting protrusion and having a decreasing width; and

an inclined surface (P**2**) provided on a side surface of the post coupling hole and guiding the corner casting protrusion to be inserted into the post coupling hole.

3. The foldable container according to claim **1**, wherein the corner locking member (**160**) includes cylindrical horizontal members (**161** and **162**), and a handle (**163**) vertically connected to the horizontal members.

4. The foldable container according to claim **3**, wherein the corner locking structure further includes:

a first cylindrical portion (**165**) having a hollow shape into which one end of the horizontal member is inserted;

a second cylindrical portion (**166**) having a hollow shape into which the other end of the horizontal member is inserted; and

a first handle position guide (**163***a*) and a second handle position guide (**163***b*) guiding a position of the handle, and

the first cylindrical portion, the second cylindrical portion, the first handle position guide, and the second handle position guide are provided by being fixedly coupled to the side panel.

5. The foldable container according to claim **4**, wherein the corner locking structure further includes a third coupling hole (**168**) that is a through hole provided in the side panel in a transverse direction, and

the corner locking member is inserted into the first coupling hole (**123**), the second coupling hole (P**3**) and the third coupling hole (**168**).

* * * * *