J. S. & R. BOWLING.

PLOW-STOCKS AND SWEEPS.

No. 194,407. Patented Aug. 21, 1877.

Fig. 1.

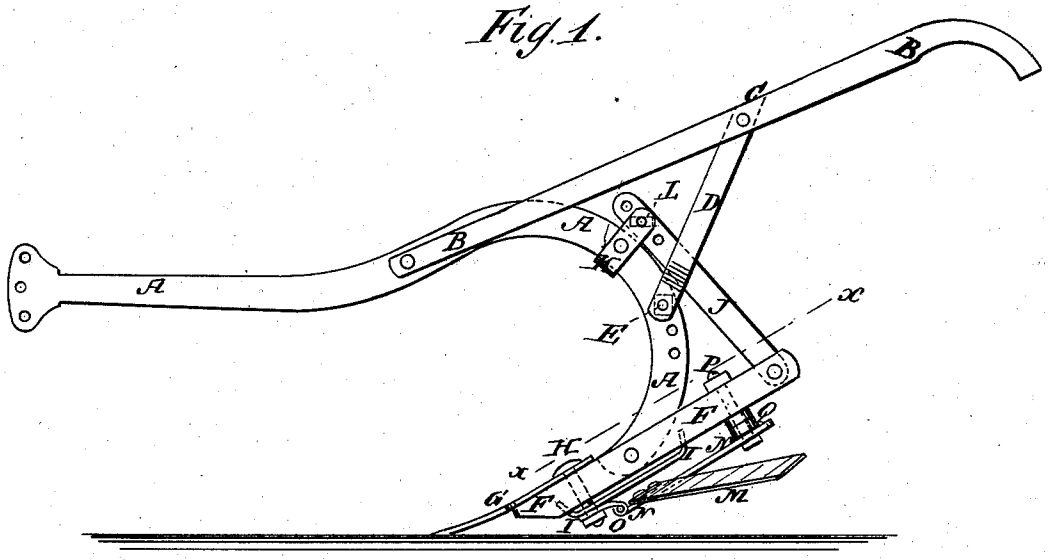

Fig. 2.

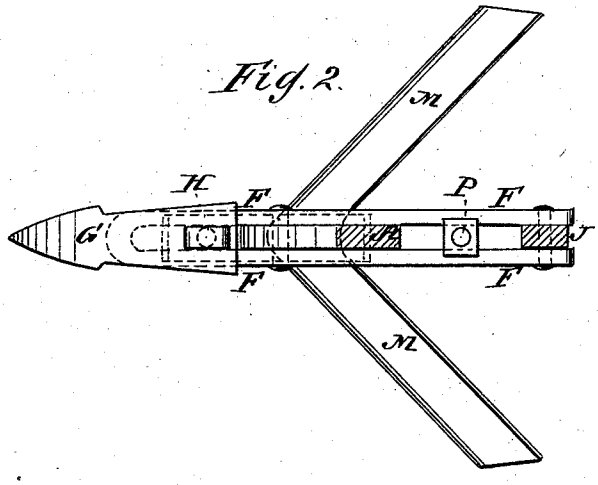

WITNESSES:

E. Wolff

J. H. Scarborough

INVENTORS

J. S. Bowling.

R. Bowling.

BY Munn & Co.

ATTORNEYS.

N. PETERS, PHOTO-LITHOGRAPHER, WASHINGTON, D. C.

UNITED STATES PATENT OFFICE.

JOHN S. BOWLING AND ROBERT BOWLING, OF ALEXANDRIA, ALABAMA.

IMPROVEMENT IN PLOW STOCKS AND SWEEPS.

Specification forming part of Letters Patent No. **194,407**, dated August 21, 1877; application filed February 10, 1877.

To all whom it may concern:

Be it known that we, JOHN SLAUGHTER BOWLING and ROBERT BOWLING, of Alexandria, in the county of Calhoun and State of Alabama, have invented a new and useful Improvement in Plow Stocks and Sweeps, of which the following is a specification:

Figure 1 is a side view of our improved plow. Fig. 2 is a detail section of the same, taken through the line *x x*, Fig. 1.

Similar letters of reference indicate corresponding parts.

The object of this invention is to furnish an improved plow, which shall be so constructed that the point and sweep can be adjusted to work at any desired angle, and which shall be simple in construction and convenient in use.

The invention consists in the combination of the adjustable steel spring with the adjustable slotted foot, and with the bolt that secures the plow-plate to said foot; and in the combination of the sweep, the hinged bar, and the adjusting-bolt, with the adjustable slotted foot, and with a bolt that passes through said slotted foot, as hereinafter fully described.

A represents the plow-beam, the forward part of which is horizontal, and its rear part is curved upward, rearward, downward, and forward, in about the arc of a semicircle.

B are the handles, the forward ends of which are bolted to the beam A, at or near the forward part of its bend.

The rear parts of the handles B are attached to the ends of a round, C, to the end parts of which, or to the handles B, are attached the upper ends of two bars, D.

The lower ends of the bars D are secured to the opposite sides of the rear part of the beam A by a bolt, E. Several holes are formed in the beam A to receive the bolt E, so that the rear ends of the handles B may be adjusted higher or lower, as the height of the plowman may require.

F is the foot, which is slotted longitudinally from its rear end nearly to its forward end. The lower end of the beam A is inserted in the slot of the foot F a little in front of its center, and is pivoted to it by a pin or bolt.

G is the plow-plate, which is placed upon and is secured to the forward end of the foot F by a bolt, H. The bolt H passes through a hole in the plow-plate G through the slot in the foot F, and through a hole in the spring I, which is placed beneath the forward part of the foot F, and has its ends bent inward, to rest against the lower side of the said foot F, and has tongues formed upon the said ends, to enter the slot of the foot, and prevent the said spring from turning.

The spring I holds the plow-plate G securely in place, and prevents the threads of the bolt H from being torn off when its nut is screwed up tight.

To the rear end of the foot F is pivoted the lower end of the bar J, which passes up at the rear side of the beam A, and its upper end passes between the arms of a U-bar, K, and is secured to said arms by a bolt, L. Several holes are formed in the bar J to receive the bolt L, so that, by adjusting the said bar J, the foot F may be adjusted to hold the plow-plate G at any desired pitch. The U-bar K passes around the beam A, and is secured to it by a bolt or rivet.

M is the sweep, which is made V-shaped, and is secured at its angle to the forward part of the bar N. The forward end of the bar N is hinged to a plate, O, which is placed upon the lower end of the bolt H, and is secured in place by the nut of said bolt H.

The rear end of the bar N has a hole formed through it, to receive the bolt P, which passes up through the slot of the foot. Several washers or blocks Q are placed upon the bolt P, so that the pitch of the sweep M may be adjusted by placing the blocks Q upon the bolt P, above or below the foot F, or some above and some below said foot F.

Having thus described our invention, we claim as new and desire to secure by Letters Patent—

1. The combination of the adjustable steel spring I with the adjustable slotted foot F, and with the bolt H, that secures the plow-plate G to said foot F, substantially as herein shown and described.

2. The combination of the sweep M, the hinged bar N, and the adjusting-bolt P, with the adjustable slotted foot F, and with a bolt, H, that passes through said slotted foot F, substantially as herein shown and described.

JOHN SLAUGHTER BOWLING.
ROBERT BOWLING.

Witnesses:
JOHN M. CROOK,
EMMETT F. CROOK.