(12) INTERNATIONAL APPLICATION PUBLISHED UNDER THE PATENT COOPERATION TREATY (PCT)

(19) World Intellectual Property Organization
International Bureau

(43) International Publication Date
06 May 2021 (06.05.2021)

WIPO | PCT

(10) International Publication Number
WO 2021/086301 A1

(51) International Patent Classification:
F41A 33/00 (2006.01) *F41G 3/26* (2006.01)
F41A 19/00 (2006.01) *G09B 9/00* (2006.01)

(21) International Application Number:
PCT/US2019/058266

(22) International Filing Date:
28 October 2019 (28.10.2019)

(25) Filing Language: English

(26) Publication Language: English

(72) Inventor; and
(71) Applicant: **SEIGLER, Stanley, Hahn** [US/US]; P.O. Box 1192, Kamiah, ID 83536 (US).

(81) Designated States *(unless otherwise indicated, for every kind of national protection available)*: AE, AG, AL, AM, AO, AT, AU, AZ, BA, BB, BG, BH, BN, BR, BW, BY, BZ, CA, CH, CL, CN, CO, CR, CU, CZ, DE, DJ, DK, DM, DO, DZ, EC, EE, EG, ES, FI, GB, GD, GE, GH, GM, GT, HN, HR, HU, ID, IL, IN, IR, IS, JO, JP, KE, KG, KH, KN, KP, KR, KW, KZ, LA, LC, LK, LR, LS, LU, LY, MA, MD, ME, MG, MK, MN, MW, MX, MY, MZ, NA, NG, NI, NO, NZ, OM, PA, PE, PG, PH, PL, PT, QA, RO, RS, RU, RW, SA, SC, SD, SE, SG, SK, SL, SM, ST, SV, SY, TH, TJ, TM, TN, TR, TT, TZ, UA, UG, US, UZ, VC, VN, ZA, ZM, ZW.

(84) Designated States *(unless otherwise indicated, for every kind of regional protection available)*: ARIPO (BW, GH, GM, KE, LR, LS, MW, MZ, NA, RW, SD, SL, ST, SZ, TZ, UG, ZM, ZW), Eurasian (AM, AZ, BY, KG, KZ, RU, TJ, TM), European (AL, AT, BE, BG, CH, CY, CZ, DE, DK, EE, ES, FI, FR, GB, GR, HR, HU, IE, IS, IT, LT, LU, LV, MC, MK, MT, NL, NO, PL, PT, RO, RS, SE, SI, SK, SM, TR), OAPI (BF, BJ, CF, CG, CI, CM, GA, GN, GQ, GW, KM, ML, MR, NE, SN, TD, TG).

Published:
— *with international search report (Art. 21(3))*

(54) Title: DRY FIRE PRACTICE TRAINING DEVICE

(57) Abstract: This invention provides, by incorporating a simulated ammunition magazine in the pistol's magazine compartment, realistic muscle memory training by duplicating the action of the trigger in normal live fire, the feel and the sound of the release of the firing pin, and the resetting of the trigger for additional trigger activation. This device does not require the shooter to manipulate any parts in order to make it properly interface with the pistol's trigger mechanism. It does not interact with the pistol's firing pin and does not require any alterations to the pistol such as the disassembling and the reassembling of parts after the practice session is over. It also provides internal components that allow it to be used in conjunction with other electronic training devices.

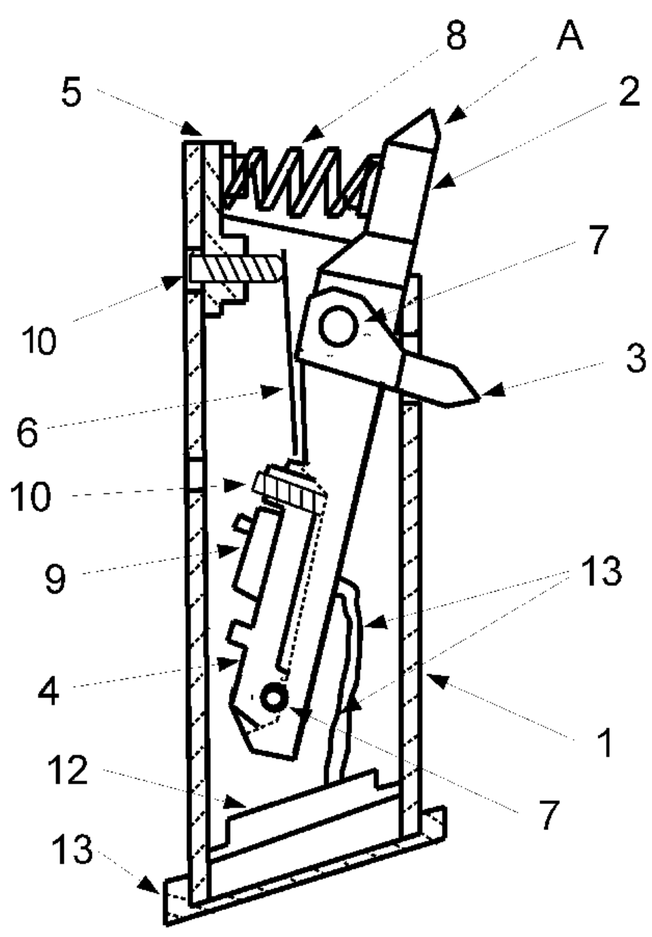

FIG. 19

WO 2021/086301 A1

DRY FIRE PRACTICE TRAINING DEVICE

CROSS-REFERENCE TO RELATED APPLICATIONS – NOT APPLICABLE

STATEMENT REGARDING FEDERALLY SPONSORED RESEARCH OR DEVELOPMENT-NOT APPLICABLE

REFERENCE TO A SEQUENCE LISTING, A TABLE, OR A COMPUTER PROGRAM, LISTING COMPACT DISC APPENDIX -NOT APPLICABLE

BACKGROUND OF THE INVENTION

(0001) Live firing is the best way to practice drawing and firing a weapon. The practice process builds muscle memory, and helps the shooter develop proper techniques of delivery and complete weapon control. There are several negatives of this type of practice. Using ammunition is an ongoing expense, and measures have to be taken to practice with safety. This could mean traveling to a firing range, providing safety equipment for the shooter and possibly others, and allotting special time in the schedule for the practice session.

(0002)Dry fire practice is a good substitute for live fire practice. Dry firing is another process of building muscle memory whereby a firearm, especially a pistol, is drawn, aimed, and fired without using live ammunition. This enables the practice of firing a weapon to proceed smoothly and accurately without all of the negatives of live fire practice. Because no live ammunition is used, there is no ongoing expense, there is no need to use safety equipment, a special shooting environment is not necessary, and practicing can be accomplished in much less time.

(0003)Dry firing also allows the shooter to practice in the actual environment where the weapon may need to be used for protection such as in the home. With complete safety, actual shooting scenarios can be practiced in and around the home.

(0004) Practicing at the range can also be improved. When live fire is practiced at the range, the novice shooter usually has to spend a significant amount of time and expend a lot of ammunition getting accustomed to the report and recoil of the pistol. Before live practice begins, some dry fire practicing can be done. This gets the novice shooter accustomed to the trigger feel before having to deal with the recoil and the report of live firing.

(0005) A major negative factor occurs with most methods of dry firing because when a semi-automatic pistol is live fired, it resets its firing pin and is ready to be fired again until the magazine is empty. The shooter's hands remain in the firing position, and just the trigger finger and the trigger are employed. With normal dry fire practice, after the first activation of the trigger releasing the firing pin, the shooter must remove a hand from the pistol and ratchet the slide back in order to reset the firing pin. The shooter can then let the trigger return the to its unfired position. The pistol is then ready for another activation. This must be done each time a shot is simulated. Doing this, teaches improper muscle memory because it is not at all what happens during actual live fire. When people are in real shooting situations, they need to be able to depend on simply acting upon how they have practiced. Anything else could be deadly.

(0006) Another negative for standard dry fire practice is that there is concern as to wear and tear on the constant releasing of a weapon's firing pin without it having the cushioning effect of the firing pin striking a round of ammunition.

(0007) Some patented training systems incorporate computer graphics into the training scenario. Other patents address the duplication of a pistol's recoil, laser marking of “shots”, projecting images onto a screen, etc.

Here are a few examples of pistol training patents:

U.S. PATENT DOCUMENTS:

5,993,215; November 30, 1999 Jansen; Kotsiopoulos

4,657,511 April 14, 1987 Allard; Briard; Saunier

4,725,235 February 16, 1988 Schroeder; Osborne

4,737,106 April 12, 1988 Laciny

4,804,325 February 14, 1989 Willits; Kleeman; Willits

5,451,162 September 19, 1995 Parsons

9,182,189 November, 10, 2015 Seigler

(0008) These are some devices or systems that aid in dry fire practice, but only one of the patented devices (9,182,189) or systems address the "hands-free" trigger reset problem or the firing pin use problem.

(0009) Negative qualities of these devices or systems are that they are either user intensive and/or expensive to purchase, but most significantly they do not allow a shooter to use a fully functioning pistol that he may already own. There is also a learning curve or training necessary to use these systems, but most of all, none of the patented devices or systems except (9,182,189) address the "hands-free" trigger reset problem and the possible firing pin damage problem of normal dry fire practice.

(0010) The device with patent number 9,182,189 (my previous patent) solves all of the stated problems, but there are improvements that need to be made. The means for insertion into the magazine's well has

been simplified, internal parts have been improved, and alterations have been provided so that the device can interact with electronic training systems through a micro switch and electronic components.

(0011) There is no device that provides proper dryfire training as already described that also has components that will allow it to interact with electronic training devices like lasers.

There is therefore a need for a dry fire training device that uses a fully functioning pistol, allows for precise muscle memory training, is simple to operate, prevents the firing pin of the fully functioning pistol from being damaged, provides for safe on-site home training, inserts easily into the magazine well, and has capabilities to interact with electronic training systems. This new device improves upon existing device 9,182,189 (my previous patent) .

BRIEF SUMMARY OF THE INVENTION

(0011) The invention that is to be described accomplishes the most important aspects of dry fire training: no live ammunition is used providing safety and no on going expense, convenience of practicing in the home environment where the protective, fully functioning pistol would most likely be used for defensive purposes, no involved disassembling and reassembling of any of the fully functional pistol's components, the realistic feel of the trigger during the firing process and the trigger reset, precise muscle memory training using only the trigger finger motion, and does not negatively affect the fully functional pistol's firing pin. This invention also helps the novice shooter train with his pistol before he has to deal with the recoil and the report of firing live ammunition. This invention is simple to use, provides realistic feel of the trigger operation, produces a sound that simulates the release of the pistol's firing pin, and does not require any alterations to the fully functional pistol such as disassembling and reassembling of any parts of the pistol. There is therefore a need for a dry fire

training device that uses a fully functioning pistol, allows for precise muscle memory training, is simple to operate, prevents the firing pin of the fully functioning pistol from being damaged, provides for safe on-site home training, inserts easily into the magazine well, and has capabilities to interact with electronic training systems. This new device improves upon existing device 9,182,189 (my previous patent). This improved device addresses these situations through the pistol's magazine compartment. This invention simply slides into the magazine compartment in the pistol's handle, and practice can begin. It requires no alterations to the pistol before or after practice. This new device functions completely independent of the pistol's firing pin.

(0012) An additional point of safety is that the base plate, which is always visible to the shooter and trainer, is a bright orange color to identify the safety of device from a magazine that could contain live ammunition. There is no way that this device can mechanically accommodate any live ammunition.

BRIEF DESCRIPTION OF THE SEVERAL VIEWS OF THE DRAWINGS

FIG. 1 illustrates a back view of a simulated magazine case with an adjusting set screw base adhered to its back wall.

FIG. 2 illustrates a sectional side view of said simulated magazine case showing the set screw base adhered to its back wall.

FIG. 3 illustrates a top view of a lever.

FIG. 4 illustrates a side view of said lever

FIG. 5 illustrates a top view of a swing lock.

FIG. 6 illustrates a side view of said swing lock.

FIG. 7 illustrates a top view of a micro switch lever.

FIG. 8 illustrates a side view of said micro switch lever.

FIG. 9 illustrates a top view of a set screw base.

FIG. 10 illustrates a side view of said set screw base.

FIG.11 illustrates a side view of a fulcrum pin.

FIG. 12 illustrates a side view of a compression spring.

FIG. 13 illustrates a top view of a detente reed.

FIG. 14 illustrates a side view of a set screw.

FIG. 15 illustrates a top view of a micro switch.

FIG. 16 illustrates a side view of said micro switch.

FIG. 17 illustrates a side view of a micro processor.

FIG. 18 illustrates a top view of said micro processor.

FIG. 19. illustrates a sectional view of the assembled device in its resting position.

DETAILED DESCRIPTION OF THE INVENTION

FIGS. 1 & 2 illustrate the simulated magazine case 1 that has six holes: a pair of holes in each side to receive the fulcrum pin 7 for the lever 2 to hinge upon; a third hole in the front of said magazine 1 to provide access to the regulating set screw 10 which is mounted in the set base 5 as illustrated in FIG. 2, being adhered to the inside back wall of said magazine case 1; a forth hole beneath the previously mentioned hole which allows for adjusting the mounting screw for the detent reed 6; a fifth hole in the back of the magazine 1 for adjusting a second set screw 10 in the micro switch lever 4 to regulate the adjusting point of another training device; a sixth hole in the front of the magazine 1 to allow the swing lock 3 to interact with a member in the pistol's magazine well to lift and place the lever 2 in the proper position with the pistol's trigger mechanism when the device is inserted into the pistol's magazine well.

FIGS. 3 & 4 illustrate the lever 2 with various shapes that allow it to support the detente reed 6, locate the coil spring 7, mount the swing lock 3, and mount the micro switch lever 4, and a projection at the top to interact with the pistol's trigger mechanism at point A; all these are illustrated in FIG. 19.

FIGS. 5&6 illustrate the swing lock 3 which is pin mounted to the lever 2 and protrudes out of the hole in the front of the magazine's 1 front side to interact with a member in the pistol's magazine well which places the lever 2 into its proper position with the pistol's trigger mechanism.

FIGS. 7& 8 illustrate a lever 4 which pin mounts to the lever 2, has a hole for accommodating the set screw 10 for adjustments, and provides a location for mounting a micro switch 9.

FIGS. 9 & 10 illustrate the set screw base 5 which is adhered to the inner front wall of the magazine 1 and accommodates the set screw 10 to adjust when the detente reed 6 snaps as the lever 2 is actuated by the pistol's trigger mechanism at point A.

FIG. 11 illustrates a fulcrum pin 6 that allows the lever 5 to rotate to activated the detent reed 6 by the action transferred through the lever 5 at point A, moving the detent reed 6 against the set screw 10, producing the simulated tactile release and the audible response of the weapon's firing pin. Another fulcrum pin 7 mounts the micro switch lever 4 onto the lever 2.

FIG. 12 illustrates a compression spring 8 that returns the lever 2 to its resting position against the front of the magazine 1 and resets the pistol's trigger mechanism to its resting position.

FIG. 13 illustrates a detent reed 6 which is mounted to the lever 2 and provides the tactile release

simulating the feel of the release of the pistol's firing pin and an audible response simulating the sound of the release of the pistol's firing pin.

FIG. 14 illustrates the set screw 10 which is used in the set screw base 5 and the micro switch lever 4 and provides for adjustments of both as illustrated in FIG. 19.

FIGS.15 & 16 illustrate the micro switch 9 which is mounted to its lever 4 and presses against the inner wall of the magazine 1 to activate an electronic component for other training devices.

FIGS. 17 & 18 illustrate the micro processor 11 that is activated by the micro switch 9 when the lever assembly is hinged towards the back of the magazine 1 and thus provides an electrical signal received by another device for dry fire training.

FIG. 19 illustrates a sectional view of the assembled dry fire training device showing the lever 2 in its resting position. The compression spring 8 is applying a forward force to hold the lever 2 forward. This view shows the detent reed 6 resting against the set screw 10 in its “untripped” or unreleased position. The set screw 10 provides adjustment to control the release of the detent reed 6 at precisely the right position in the travel of the pistol's trigger. The swing lock 3 is mounted to the lever 2 so that when the device is inserted into the pistol's magazine compartment, the swing lock 3 interacts with the pistol's magazine release bar and pushes the lever 2 towards the back of pistol far enough that the lever 2 can freely move behind the pistol's trigger mechanism. The swing lock 3 then swings out of the way so that the lever 2 assembly is free to interact with the pistol's trigger mechanism. When the pistol's trigger mechanism pressed against the lever 2 at point A, the lever 2 assembly swings towards the back of the magazine 1. This movement compresses the coil spring 8, bends the detent reed 6 through its

activation point against the set screw 10 and provides the tactile and the audible response, thus simulating the release of the pistol's firing pin; the micro switch 9 is compressed against the wall of the magazine 1 completing the circuit to the micro processor which sends a signal to interact with a separate dry fire training device. When the pistol's trigger is released, the coil spring 8 returns the lever 2 assembly to its resting position.

The previously patented device 9,182,189 had a sliding member that had to be pushed up to accomplish the positioning of the lever 2 behind the trigger mechanism. Then, after the lever 2 was in its working position, the shooter needed to pull the sliding lever lifter back to its resting position. This new design accomplishes this setting action without any additional actions of the shooter. The new devise also has means of interacting electronically with other dry fire training devices.

I CLAIM

1. A dry fire practice-training device to be used in a fully functioning pistol, not a training pistol, that has a magazine compartment, utilizing the pistol's empty magazine compartment, said training device comprised of: a simulated ammunition magazine acting as an encasement for the device's other components, said components being: a lever providing the means for interaction between the a pistol's trigger mechanism and a detent reed; a regulating assembly providing for the regulated activation of said detent reed; a compression spring providing a forward force to return said lever to its initial resting position; a swing lock component, providing for the positioning of said detent reed bearing lever behind the pistol's trigger mechanism when the device is inserted into the weapon's empty magazine compartment; a micro switch and its mounting assembly to provide the interaction of this device and other electrical training devices; and an orange base plate providing for recognition that the thusly equipped fully functional pistol is in a safe training mode; whereby the dry fire practice training device provides audible and tactile simulation for realistic, repetitive dry fire training and the capability of said device to interact with other electronic training devices.

2. The dry fire training device of claim 1, comprised of a mechanical assembly whereby the fully functional pistol's empty magazine compartment is utilized to provide a means for the device to provide audible and tactile simulation for realistic, repetitive dry fire training and the resetting of the pistol's trigger mechanism for multiple activations and the capability of interacting with

other electronic training devices.

3. The dry fire training device of claim 1, comprised of a simulated magazine case that has six holes: a pair of holes in each side to receive the fulcrum pin for the lever to hinge upon; a third hole in the back of said magazine to provide access to the regulating set screw which is mounted in the set screw base, being adhered to the inside back wall of said magazine case; a fourth hole beneath the previously mentioned hole which allows for adjusting the mounting screw for the detent reed; a fifth hole in the back of the magazine for adjusting a second set screw in the micro switch lever to activate the laser of another training device; a sixth hole in the front of the magazine to allow the swing lock to interact with a member in the pistol's magazine well to lift and place the lever in the proper position with respect to the pistol's trigger mechanism when the device is inserted into the pistol's magazine well.

4. The dry fire training device of claim 3, comprised of said simulated ammunition magazine that has said regulating assembly which is adhered to said magazine's inside front surface comprised of the set screw base molded with a hole to receive the set screw which allows the detent reed to be adjusted to activate at the position when the pistol's trigger mechanism would release the pistol's firing pin during normal live fire.

5. The dry fire training device of claim 1, comprised of a lever providing a member for the interaction between the weapon's trigger mechanism and said detent reed, wherein the lever is fabricated with proper dimensions for the support of said detent reed, a locator for the compression spring, the swing lock for allowing the lever to position itself behind the pistol's trigger mechanism, and various mounting surfaces for attaching the micro switch bearing lever.

6. The dry fire training device of claim 5, comprised of said lever fabricated with proper dimensions: wherein the lever further comprises a surface to support said detent reed which provides audible and tactile simulation of the release and reset of the pistol's firing pin for repetitive trigger action; a hole for a machine screw to retain said detent reed; a projection and platform for the compression spring which returns the lever to its resting position after the trigger is released thereby resetting the pistol's trigger mechanism for multiple activations; two holes for a fulcrum pin for said lever which also provides for the mounting of the micro switch lever to rotate upon; two more holes for mounting said swing lock that positions the lever in the proper position behind the trigger mechanism when the device is inserted into the pistol's magazine well; and an elongated end that intercepts the weapon's trigger mechanism.

7. The dry fire training device of claim 5, comprised of a lever fabricated with holes for mounting the micro switch bearing lever; said lever having a hole with the set screw to regulate when the mounted micro switch completes the circuit to the micro processor which activates other electronic training devices.

8. The dry fire training device of claim 6, comprised of the swing lock which interacts with the magazine release bar in the pistol's magazine well when the training device is inserted into the pistol, and which positions the lever assembly behind the pistol's trigger mechanism.

9. The dry fire training device of claim 1, wherein the orange base plate mounted on the bottom of the device where it is always visible and indicates that if the pistol has been cleared of ammunition as directed before the device is inserted, the pistol is completely safe for dry fire practice training.

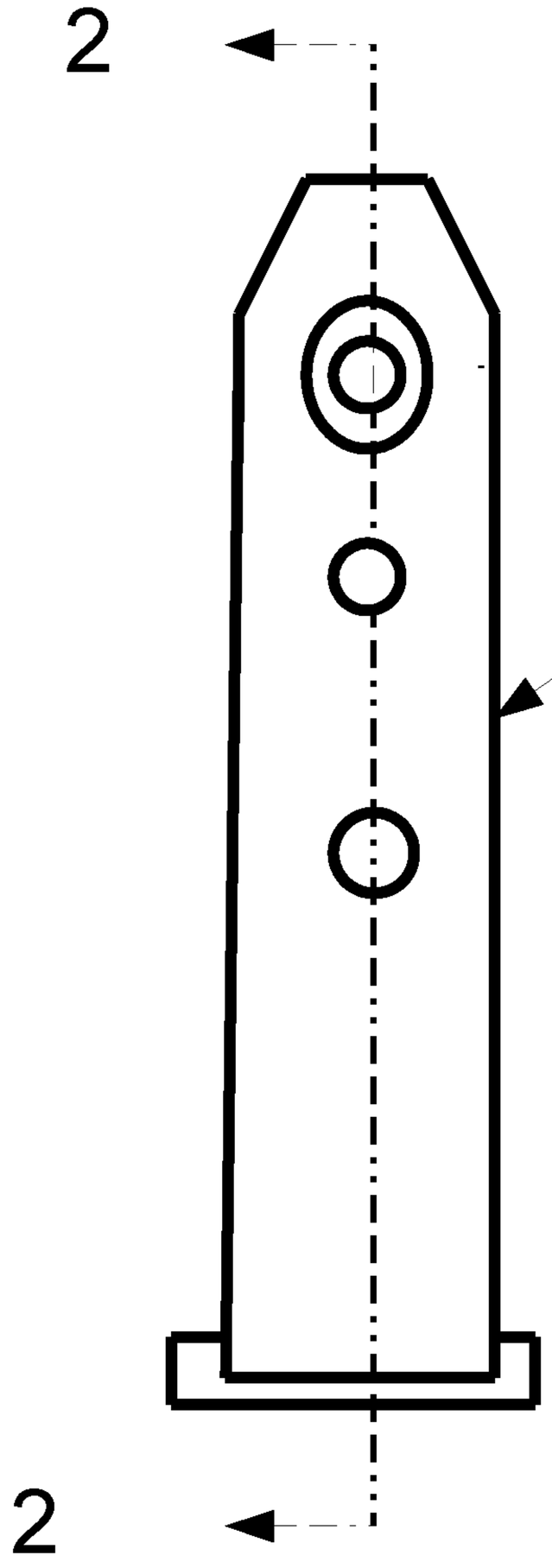

FIG. 1

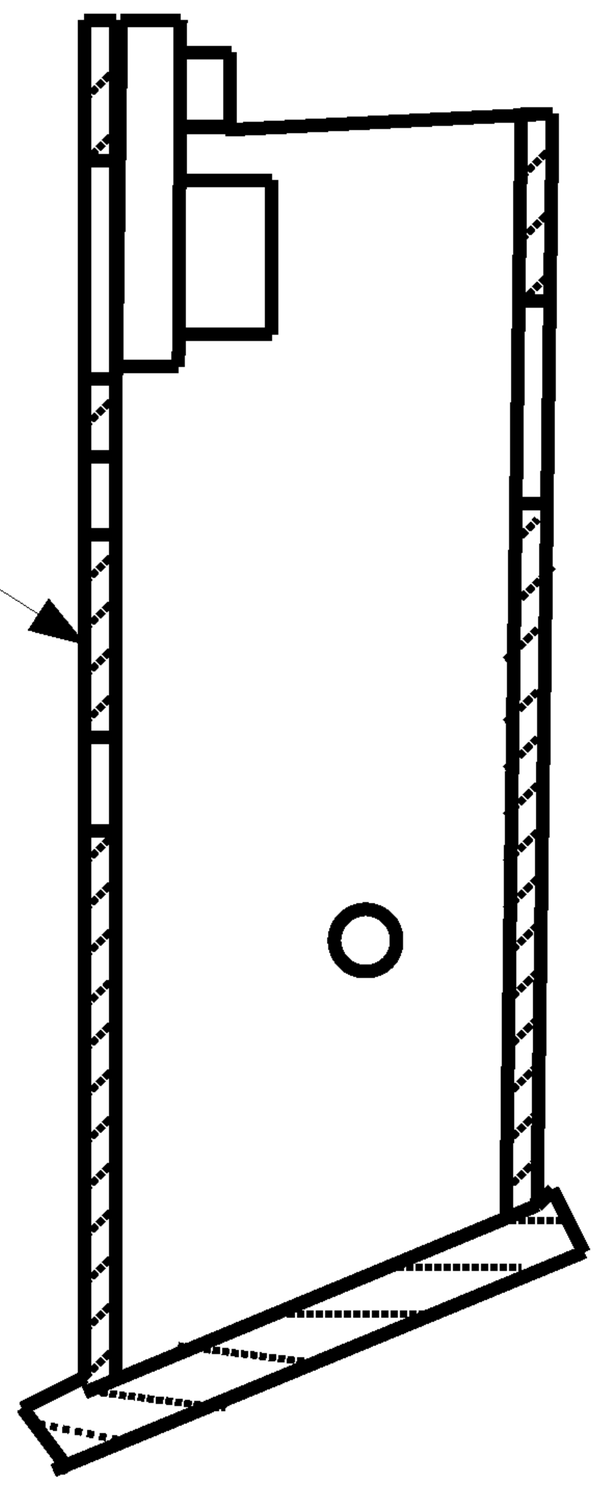

FIG. 2

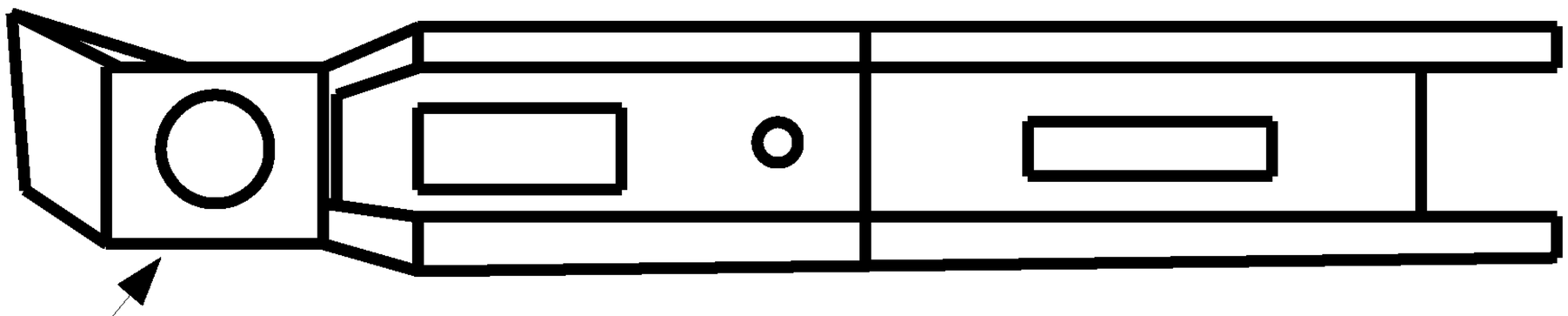

FIG. 3

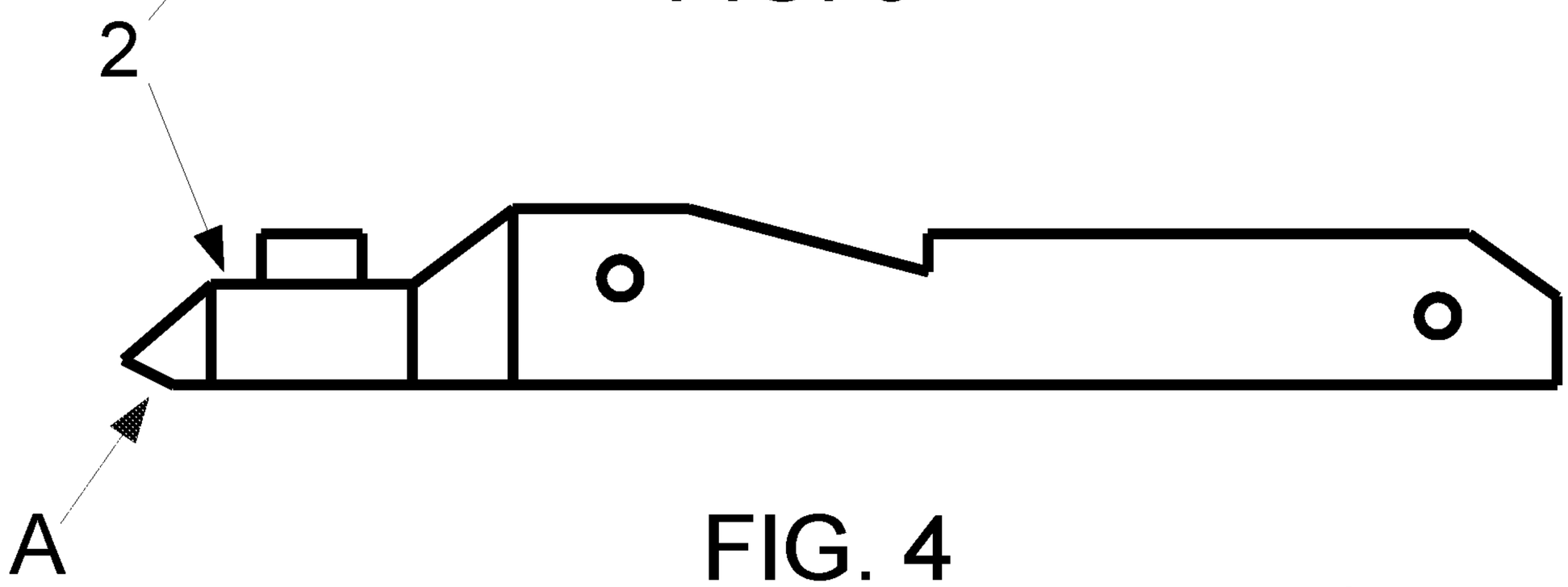

FIG. 4

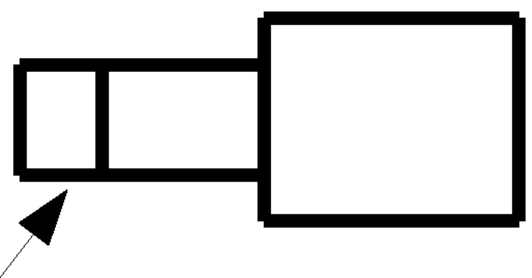

FIG. 5

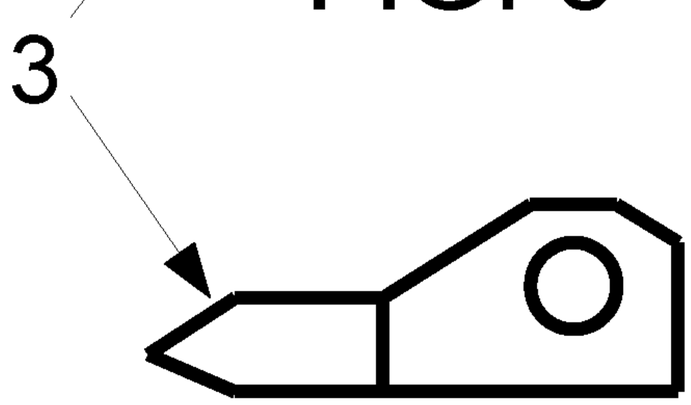

FIG. 6

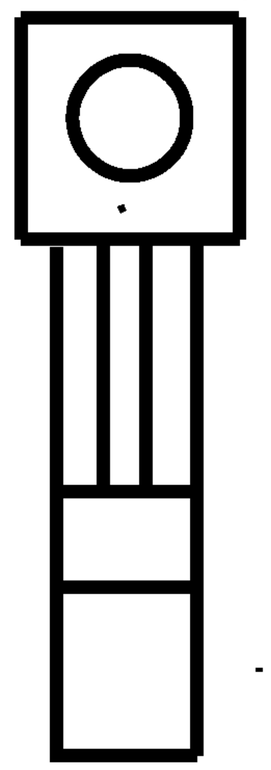

FIG. 7

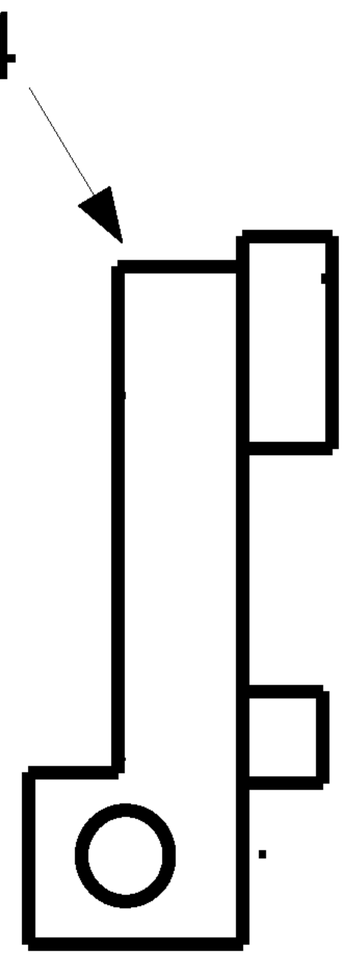

FIG. 8

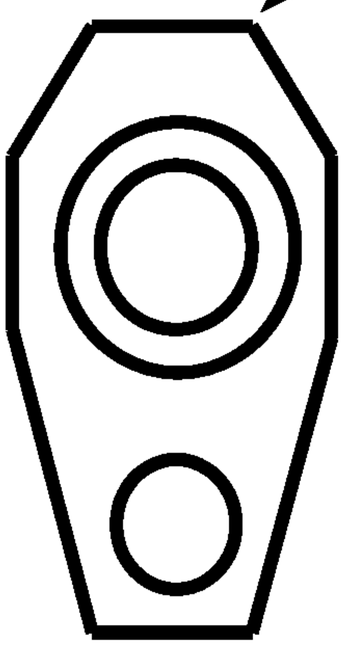

FIG. 9

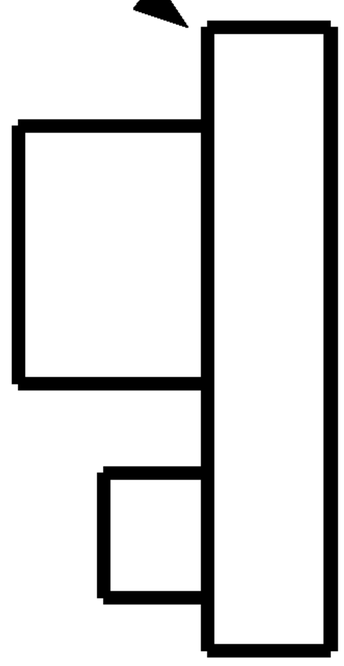

FIG.10

FIG.11

FIG.12

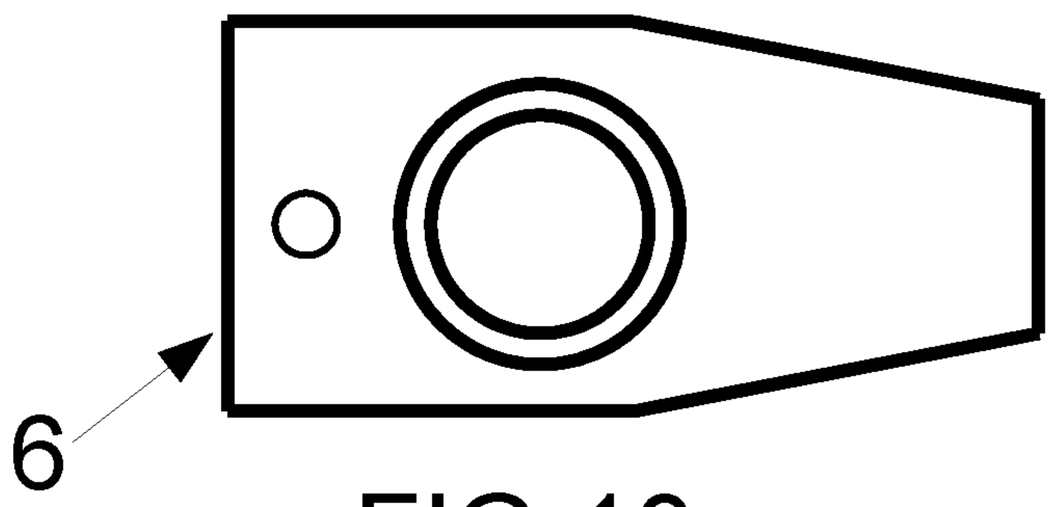

FIG.13

FIG.15

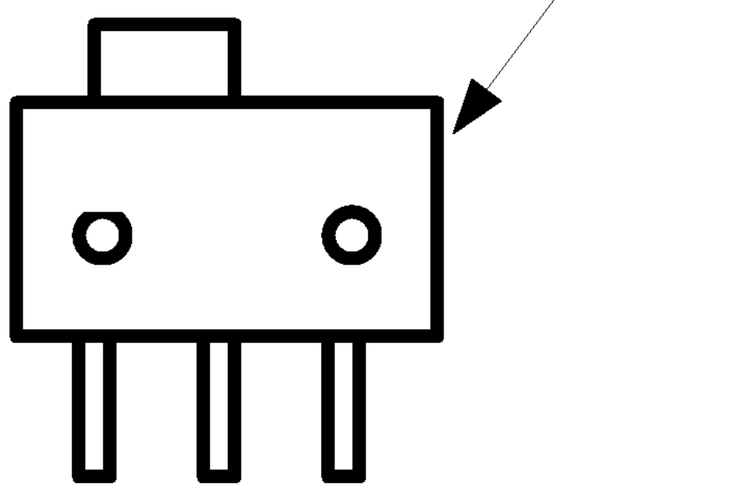

FIG. 16

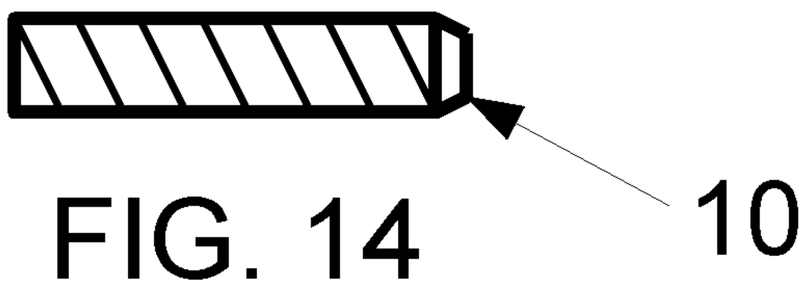

FIG. 14

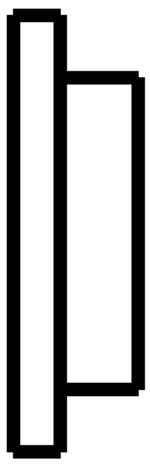

FIG. 17

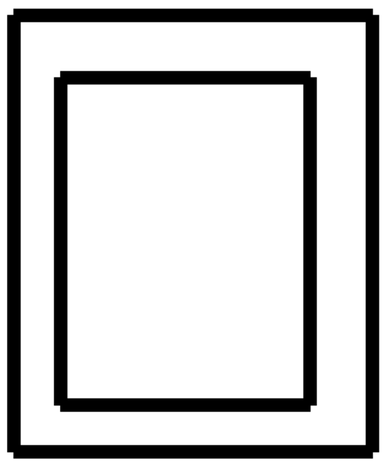

FIG. 18

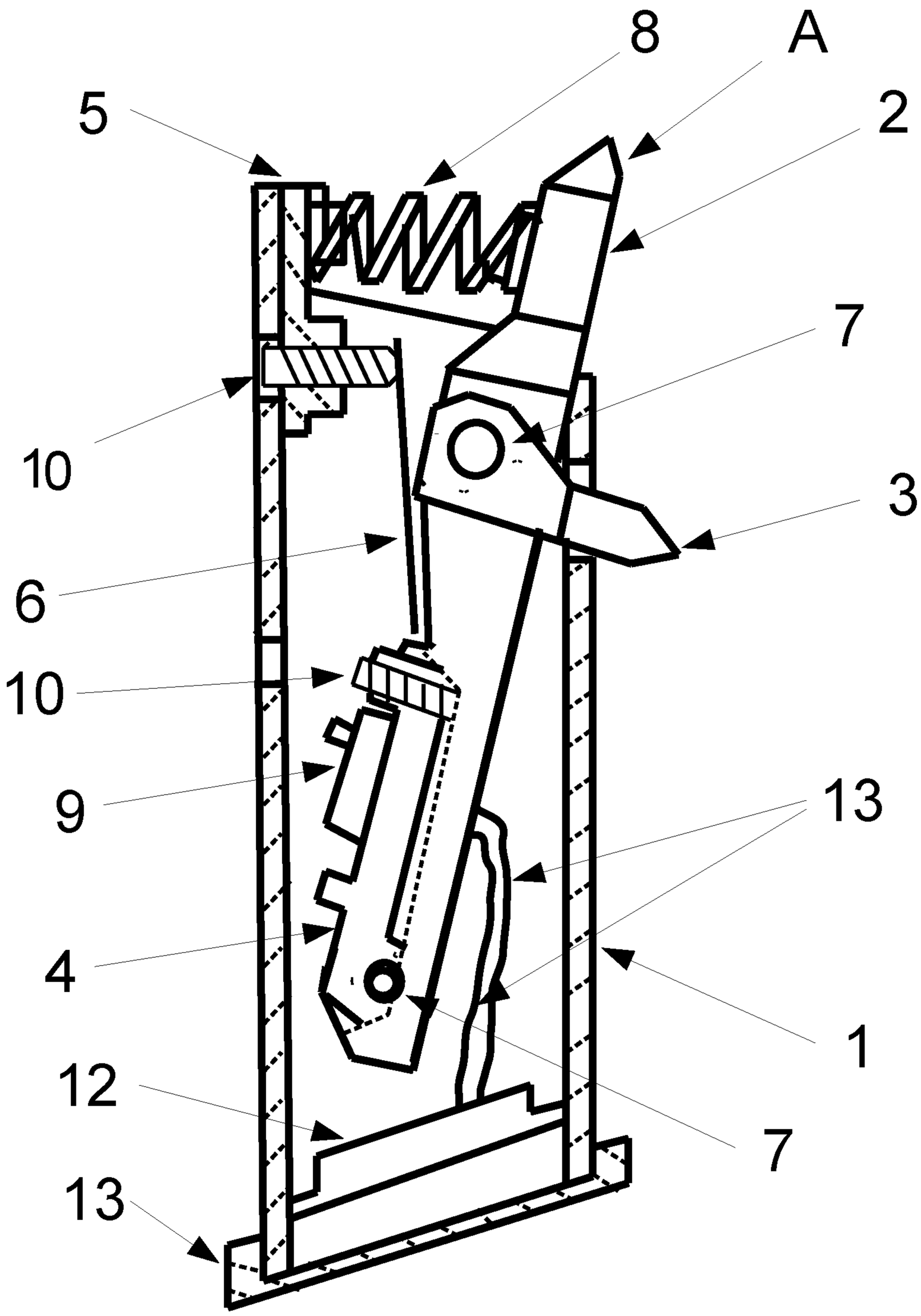

FIG. 19

INTERNATIONAL SEARCH REPORT

International application No.
PCT/US 19/58266

A. CLASSIFICATION OF SUBJECT MATTER

IPC - F41A 33/00, F41A 19/00, F41G 3/26, G09B 9/00 (2019.01)

CPC - F41A 33/00, F41A 19/00, F41A 9/64, A63F 9/02, F41A 21/26, F41G 3/26, G09B 19/00, G09B 9/00, G09B 9/003, A63F 13/02, F41A 9/61, F41A 33/02, F41A 19/02

According to International Patent Classification (IPC) or to both national classification and IPC

B. FIELDS SEARCHED

Minimum documentation searched (classification system followed by classification symbols)
See Search History document

Documentation searched other than minimum documentation to the extent that such documents are included in the fields searched
See Search History document

Electronic data base consulted during the international search (name of data base and, where practicable, search terms used)
See Search History document

C. DOCUMENTS CONSIDERED TO BE RELEVANT

Category*	Citation of document, with indication, where appropriate, of the relevant passages	Relevant to claim No.
Y --- A	US 9,182,189 B2 (Seigler) 10 November 2015 (10.11.2015), entire document, especially Fig. 1, 2, 3, 4, 5, 9, 10, 11, 14, 15, 16; col 2, ln 31-37; col 4, ln 20-35; col 4, ln 10-19; col 3, ln 44-51; col 4, ln 7-9; col 4, ln 46-54; col 4, ln 37-45; col 3, ln 1-5; col 3, ln 52-55;	1-2, 5, 9 ---------- 3-4, 6-8
Y --- A	US 2017/0268845 A1 (Eblanks AS) 21 September 2017 (21.09.2017), entire document, especially Fig. 1, 2; para[0046]; para[0052]; para[0057]; para[0066]; para[0053]; para[0068];	1-2, 5, 9 ---------- 3-4, 6-8
A	US 2017/0146310 A1 (CLIPFORT L.T.D. BV) 25 May 2017 (25.05.2017), entire document, especially Fig. 1A, 1B, 1C, 6A, 6B, 8A, 8B; para[0074]; para[0095]; para[0114]; para[0115]; para[0116]; para[0117];	3-4, 6-8
A	US 5,577,962 A (Kounoe et al.) 26 November 1996 (26.11.1996), entire document, especially Fig. 1; col 3, ln 24-38; col 3, ln 54-59;	3-4, 6-8
A	US 8,770,978 B2 (Botten) 08 July 2014 (08.07.2014), entire document	1-9
A	US 2013/0108991 A1 (Cubic Corporation) 02 May 2013 (02.05.2013), entire document	1-9
A	KR 2007-0010263 A (JOUNG KYO SUN) 24 January 2007 (24.01.2007), entire document	1-9
A	WO 2008/069560 A1 (KOREA ELECOM CO., LTD.) 12 June 2008 (12.06.2008), entire document	1-9

☒ Further documents are listed in the continuation of Box C. ☐ See patent family annex.

* Special categories of cited documents:
"A" document defining the general state of the art which is not considered to be of particular relevance
"D" document cited by the applicant in the international application
"E" earlier application or patent but published on or after the international filing date
"L" document which may throw doubts on priority claim(s) or which is cited to establish the publication date of another citation or other special reason (as specified)
"O" document referring to an oral disclosure, use, exhibition or other means
"P" document published prior to the international filing date but later than the priority date claimed

"T" later document published after the international filing date or priority date and not in conflict with the application but cited to understand the principle or theory underlying the invention
"X" document of particular relevance; the claimed invention cannot be considered novel or cannot be considered to involve an inventive step when the document is taken alone
"Y" document of particular relevance; the claimed invention cannot be considered to involve an inventive step when the document is combined with one or more other such documents, such combination being obvious to a person skilled in the art
"&" document member of the same patent family

Date of the actual completion of the international search	Date of mailing of the international search report
08 January 2020	03 FEB 2020
Name and mailing address of the ISA/US Mail Stop PCT, Attn: ISA/US, Commissioner for Patents P.O. Box 1450, Alexandria, Virginia 22313-1450 Facsimile No. 571-273-8300	Authorized officer Lee Young Telephone No. PCT Helpdesk: 571-272-4300

INTERNATIONAL SEARCH REPORT

International application No.

PCT/US 19/58266

C (Continuation). DOCUMENTS CONSIDERED TO BE RELEVANT

Category*	Citation of document, with indication, where appropriate, of the relevant passages	Relevant to claim No.
A	US 8,777,620 B1 (Baxter) 15 July 2014 (15.07.2014), entire document, especially	1-9
A	US 4,725,235 A (Schroeder et al.) 16 February 1988 (16.02.1988), entire document	1-9
A	US 2019/0025000 A1 (Bascom) 24 January 2019 (24.01.2019), entire document	1-9
A	US 9,163,904 B2 (Ohr) 20 October 2015 (20.10.2015), entire document	1-9