Feb. 12, 1935. M. J. LEWIS 1,991,163

TELEPHONE ANSWERING AND AMUSEMENT DEVICE

Filed Oct. 15, 1932 6 Sheets-Sheet 1

FIG. 1.

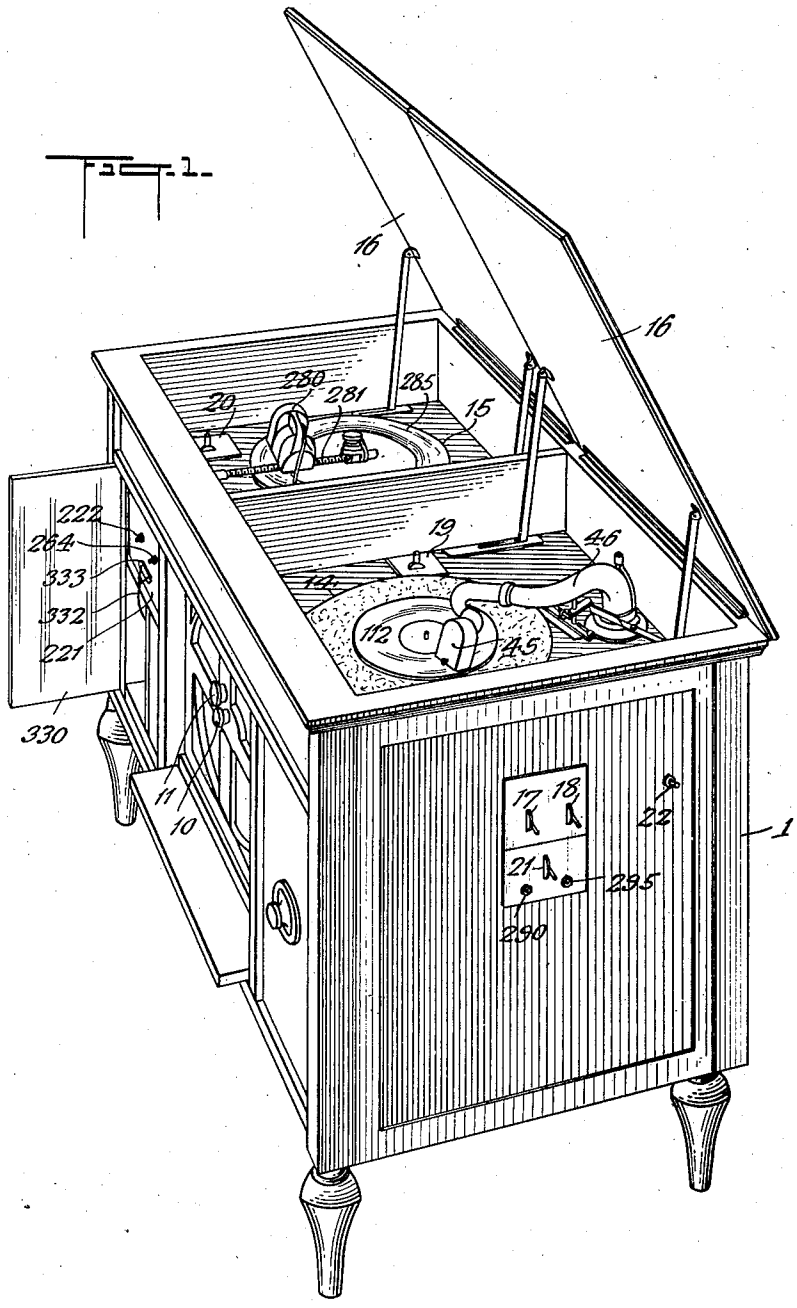

INVENTOR-
Morgan J. Lewis
BY
Williams, Rickmore
ATTORNEYS

Feb. 12, 1935. M. J. LEWIS 1,991,163

TELEPHONE ANSWERING AND AMUSEMENT DEVICE

Filed Oct. 15, 1932 6 Sheets-Sheet 2

FIG. 2.

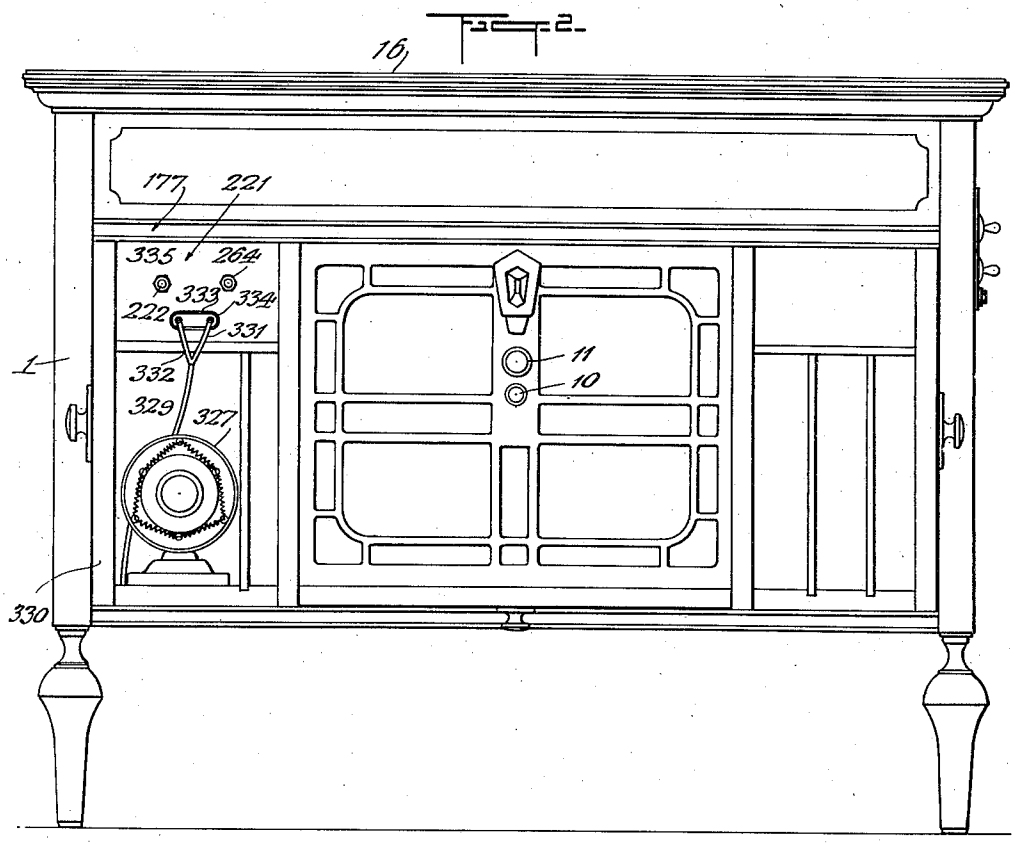

FIG. 3.

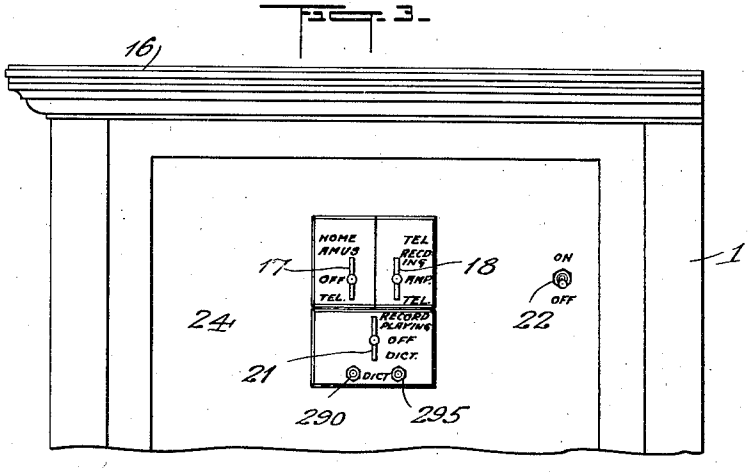

INVENTOR-
Morgan J. Lewis
BY
Williams, Rick & Morse
ATTORNEYS

Feb. 12, 1935. M. J. LEWIS 1,991,163

TELEPHONE ANSWERING AND AMUSEMENT DEVICE

Filed Oct. 15, 1932 6 Sheets-Sheet 3

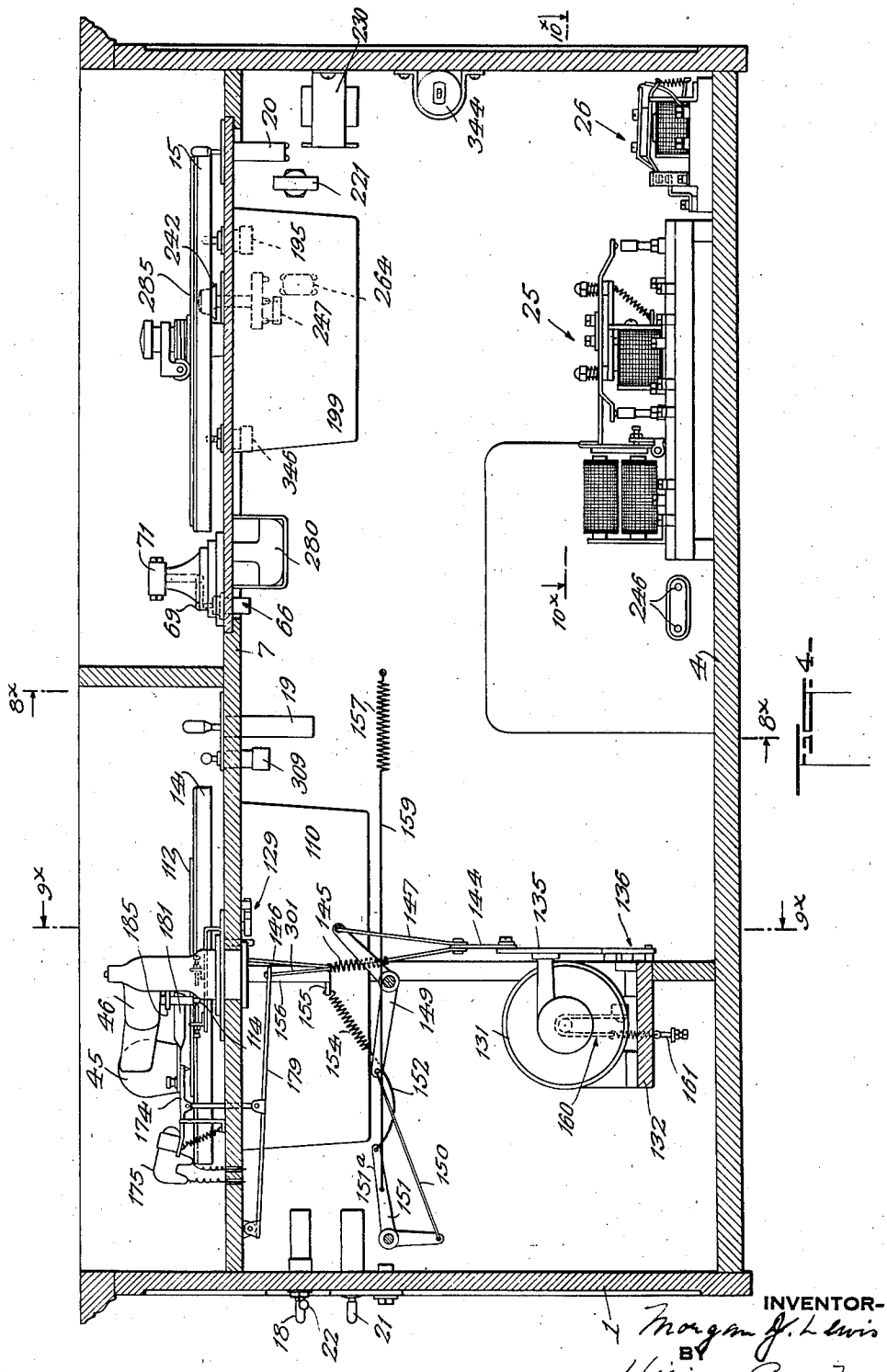

INVENTOR-
Morgan J. Lewis
BY
Williams, Rick & Morse
ATTORNEYS

Feb. 12, 1935. M. J. LEWIS 1,991,163

TELEPHONE ANSWERING AND AMUSEMENT DEVICE

Filed Oct. 15, 1932 6 Sheets-Sheet 4

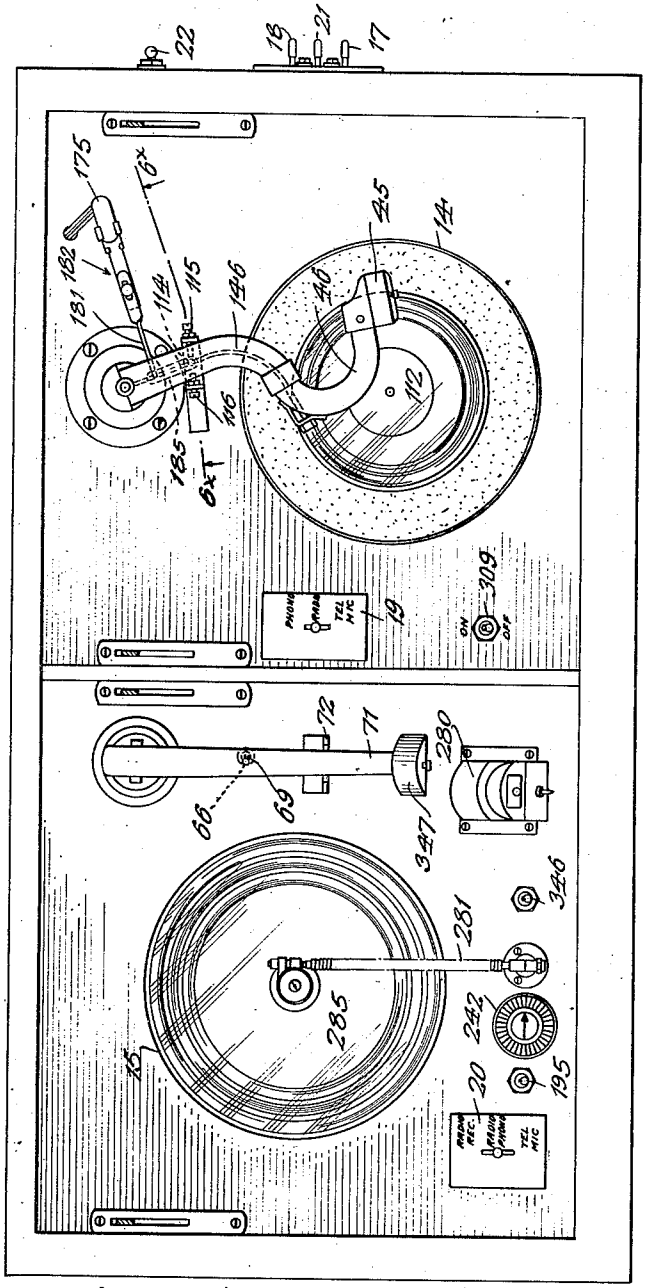

FIG. 5.

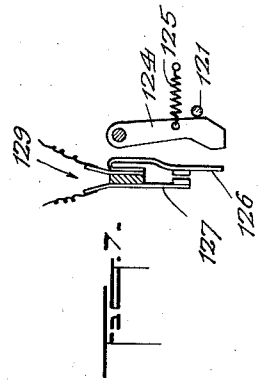

FIG. 7.

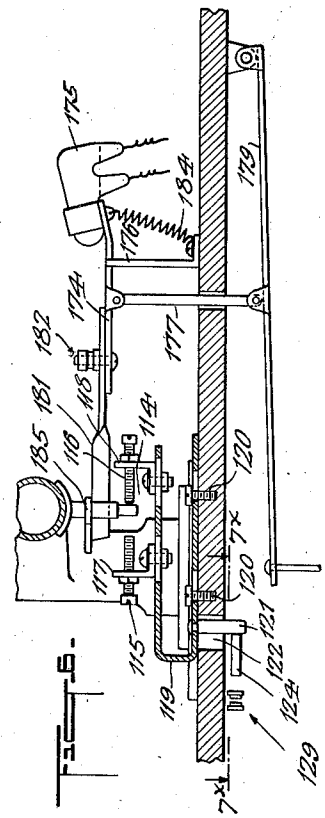

FIG. 6.

INVENTOR-
Morgan J. Lewis
BY
Williams, Rick & Morse
ATTORNEYS

Feb. 12, 1935. M. J. LEWIS 1,991,163

TELEPHONE ANSWERING AND AMUSEMENT DEVICE

Filed Oct. 15, 1932 6 Sheets-Sheet 5

Fig. 5.

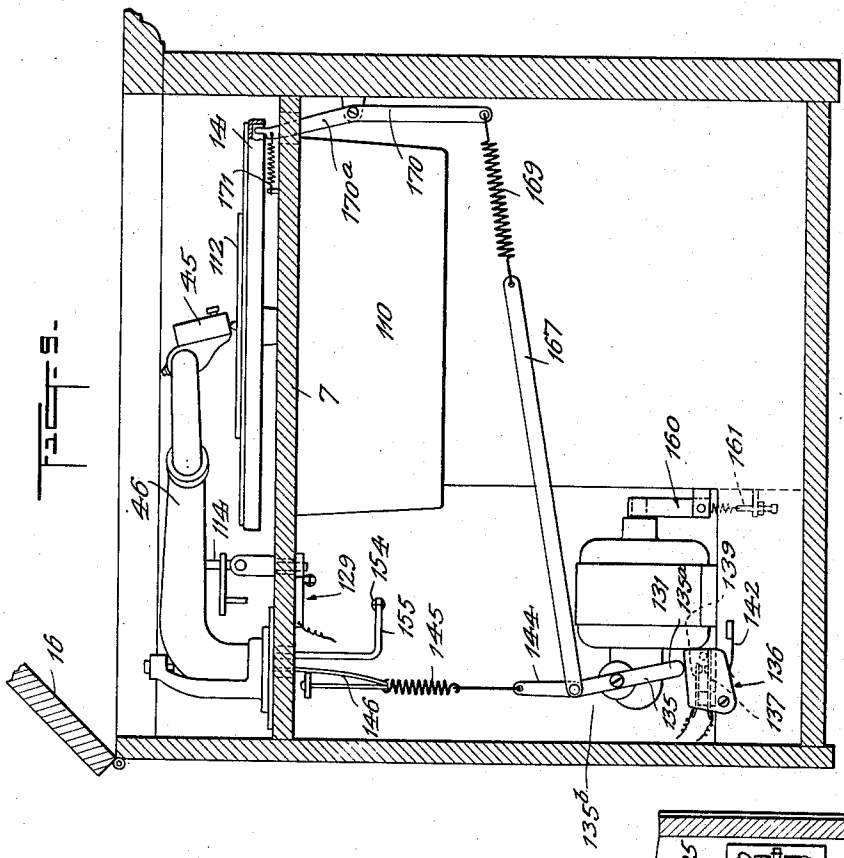

Fig. 8.

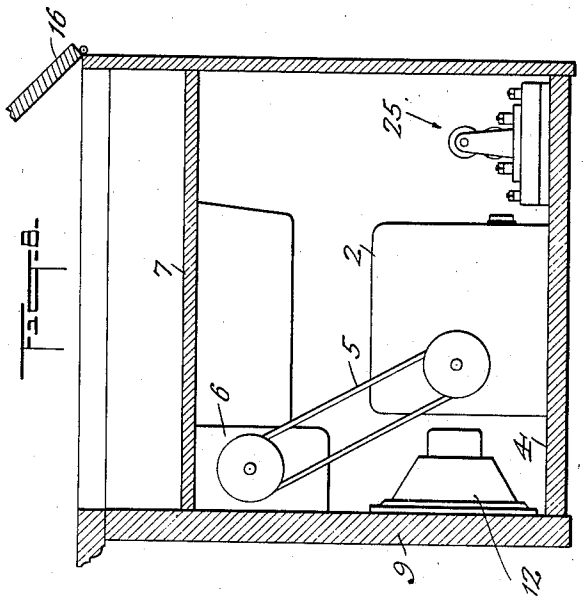

Fig. 10.

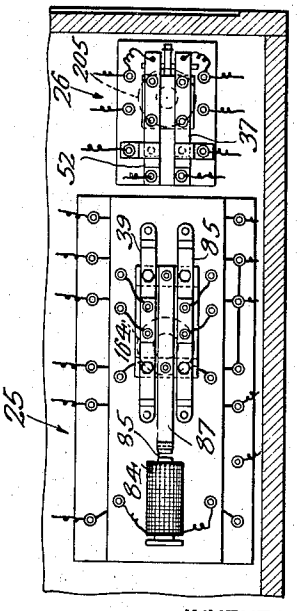

INVENTOR-
Morgan J. Lewis
BY
Williams, Rick & Morse
ATTORNEYS

Feb. 12, 1935. M. J. LEWIS 1,991,163

TELEPHONE ANSWERING AND AMUSEMENT DEVICE

Filed Oct. 15, 1932 6 Sheets-Sheet 6

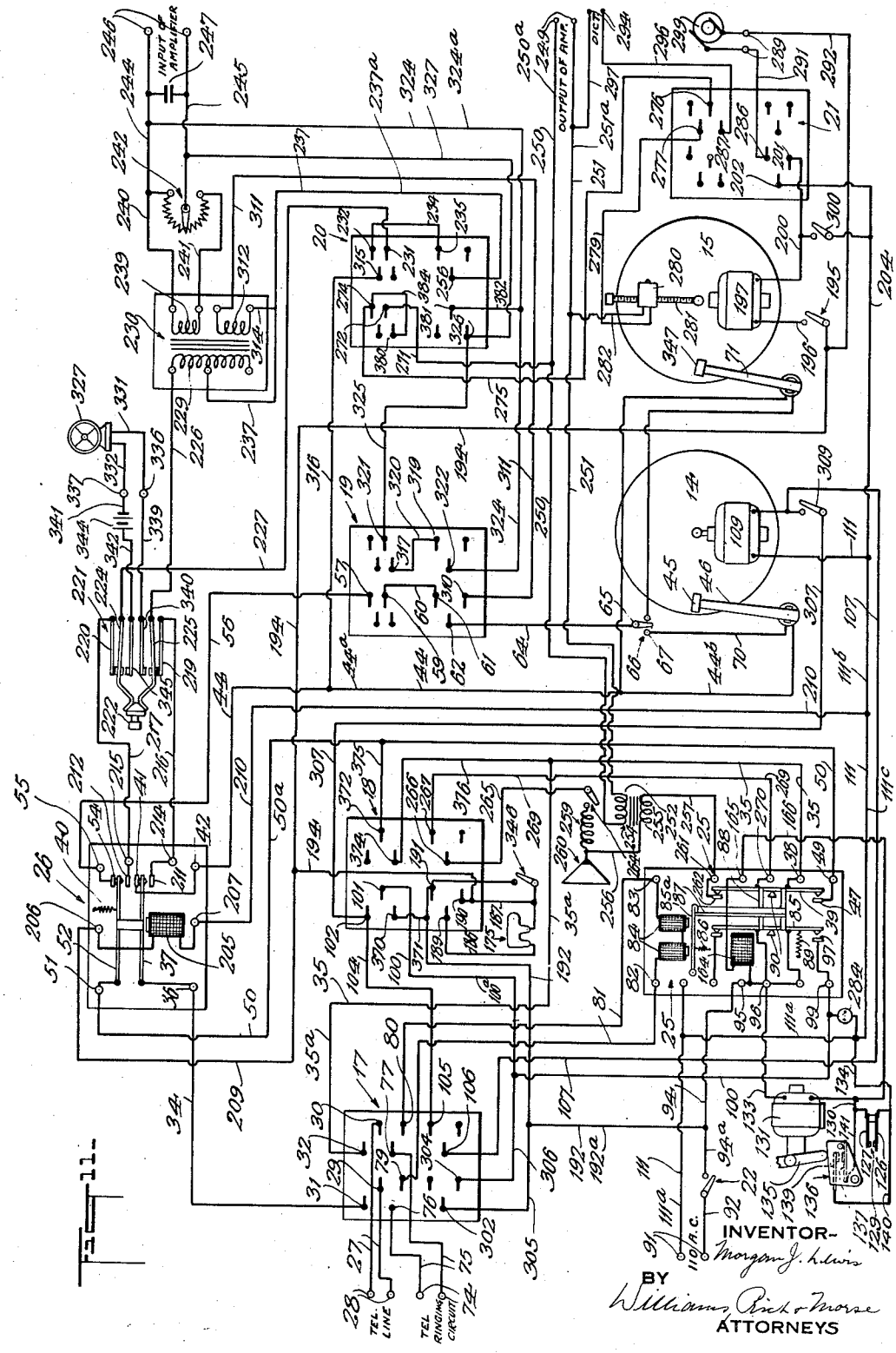

Fig. 11.

Patented Feb. 12, 1935 1,991,163

UNITED STATES PATENT OFFICE

1,991,163

TELEPHONE ANSWERING AND AMUSEMENT DEVICE

Morgan J. Lewis, Philadelphia, Pa.

Application October 15, 1932, Serial No. 637,943

9 Claims. (Cl. 179—6)

The present invention relates to a novel telephone answering and amusement device which may be used for either automatically answering a telephone or for playing phonograph records and receiving radio broadcast programs. The invention combines telephone, phonograph and radio apparatus into a unitary structure of simple construction, capable of further uses, all of which will become apparent hereinafter.

An object of the invention is to provide improved means, automatically operated by a telephone call coming in, for delivering, over the telephone line, a predetermined message to the party making said call and, if desired, for recording the message which said party may be willing to communicate to the party called.

A more specific object is to provide improved means for resetting the device in condition for another operation, after it has been automatically operated to answer an incoming call. Another specific object is to provide improved means whereby the time period within which the calling party's message is recorded may be regulated.

Another object of the invention is to provide means to record, when the telephone is answered manually, the conversation between the party calling and the party called.

Other objects are to provide means to record the incoming message from the party calling or the conversation between the party calling and the party called on a flat phonograph record or on a dictograph, means for making records either for amusement or for use in answering the telephone automatically, means to record radio receptions, means whereby the microphone used for recording can also be used with the amplifier and loud speaker of the radio apparatus for amusement purposes.

A further object of the invention is to provide means whereby the apparatus provided to reset the device in condition for again answering the telephone automatically may be utilized to repeat the playing of phonograph records automatically.

Still another specific object of the invention is to provide means whereby the same amplifier can be utilized for telephone, phonograph and radio purposes.

An important object of the invention is to provide a device of the character described which comprises a minimum number of parts and which is low in its cost of manufacture and reliable in its operation.

These and further objects and advantages of the invention will become apparent with the aid of the following description taken in connection with the accompanying drawings in which Fig. 1 is a perspective view of the device and cabinet therefor, with its lid and the door to the microphone compartment in open positions; Fig. 2 is a front view of the cabinet, with its lid lowered and microphone compartment door opened; Fig. 3 is a side view of the cabinet, showing in particular the four switches which are used mostly to operate the device; Fig. 4 is a view of the mechanism inside the cabinet, looking in from the rear of the cabinet; Fig. 5 is a top view of the device, with the cabinet lid removed; Fig. 6 is a fragmental cross-sectional view taken on the plane indicated by the line 6^x—6^x of Fig. 5; Fig. 7 is a cross-sectional detail xiew taken on the plane indicated by the line 7^x—7^x of Fig. 6; Figs. 8 and 9 are cross-sectional views of the device taken on the planes indicated by the lines 8^x—8^x and 9^x—9^x of Fig. 4, respectively, the cabinet lid being shown in part and in a raised position; Fig. 10 is a fragmental cross-sectional view taken on the plane indicated by the line 10^x—10^x of Fig. 4; and Fig. 11 is a view illustrating the wiring of the parts.

Referring to the drawings, the device is housed in an ornamental cabinet 1 (Figs. 1 and 2), of the type usually employed for radio and phonograph instruments. The radio set 2 is mounted on the bottom shelf of the cabinet, as shown in Fig. 8, and has pulley and belt drive connections 5 with the radio operating mechanism 6 installed below the upper cabinet shelf or platform 7 in rear of the front wall 9, so that the operating knobs 10 and 11 (see Figs. 1 and 2), which are the volume control and the selector of the radio, respectively, may be operated in front of the cabinet at a suitable height from the floor level. The loud speaker 12 is secured to the rear of the front wall 9, as in the usual practice.

As best shown in Figs. 4 and 5, the device is equipped with two turntables 14 and 15 mounted on the platform 7, turntable 14 being used for phonograph record playing and turntable 15 being used for either phonograph record playing or for recording purposes. The cabinet lid 16, when closed, conceals the turntables and other parts of the device mounted on said platform 7.

In the embodiment of the invention illustrated, use is made of five switches, indicated by the numerals 17, 18, 19, 20 and 21, of the usual telephone type of switch having fourteen point contacts or switch points. Three of these switches, namely, 17, 18 and 21, and the power control snap-switch 22, which are the switches used mostly for

the operation of the device, are mounted on the front of one cabinet side wall 24 (see Fig. 3), so that the cabinet top 16 need not be opened when, for example, the subscriber is present and desires to answer an incoming telephone call personally. Switches 19 and 20 are installed in the cabinet on the platform 7 near turntables 14 and 15, respectively.

The device illustrated comprises two relay mechanisms, generally indicated by the numerals 25 and 26, which will be referred to hereinafter as the main relay and the secondary relay, respectively. These relays are mounted on the bottom shelf 4, their construction being most clearly illustrated in Figs. 4 and 10.

Now referring to the wiring diagram shown in Fig. 11, the telephone line is connected to terminals 28 in electrical connection by conductors 27 with switch points 29 and 30 of the telephone switch 17. Switch points 31 and 32, also of the switch 17, cooperate with said switch points 29 and 30, respectively, and lead through conductors 34 and 35 to a terminal 36 of the secondary relay 26 in electrical connection with a movable contact arm 37 and to a terminal 38 of the main relay 25 in electrical connection with a movable contact arm 39. A spring 40 normally holds the contact arm 37 in contact with a fixed contact 41 connected to a terminal 42 leading by a conductor 44 to one terminal (not shown) of the head or electromagnetic pick-up unit 45 of the phonograph arm 46, which cooperates with the turntable 14 in the playing of records. The contact arm 39 is normally out of contact with a fixed contact 47 connected to a terminal 49 leading by conductor 50 to a secondary relay terminal 51 in electrical connection with another contact arm 52 fixed to and movable with the arm 37. The contact arm 52 normally contacts with a fixed contact 54 connected to a terminal 55 leading by a conductor 56 to a switch point 57 on the telephone switch 19. Switch contact 59, cooperating with said contact 57, is connected by a conductor 60 to another contact 61 on said switch 19. Switch contact 62, cooperating with said contact 61, leads by a conductor 64 to the middle terminal 65 of a single pole double throw snap switch 66 installed on the platform 7. One of the outer terminals of the switch 66, namely terminal 67 (the terminal causing, for connection of the middle terminal thereto, the throwing of the switch operating knob 69 toward the turntable 14 in Figs. 4 and 5), is connected by a conductor 70 to the other terminal of the electromagnetic unit 45. For a purpose which will be made more clearly apparent hereinafter, the operating knob 69 of the switch 66 is caused to be automatically thrown toward the turntable 14, when the phonograph tone arm 71, which cooperates with the other turntable 15, is swung manually out of its playing position to its inoperative position of rest on its supporting bracket 72, mounted on the platform 7.

The telephone ringing circuit is connected to terminals 74 in electrical connection by conductors 75 with other switch points 76 and 77 of the telephone switch 17. Switch contacts 79 and 80, which cooperate with said contacts 76 and 77, respectively, lead through conductors 81 to other main relay terminals 82 and 83 connected to actuating coils 84.

The main relay 25 comprises another contact arm 85 movable with the arm 39.

With the switch 17 thrown to its position marked "Telephone", switch point 76 contacts with switch point 79 and switch point 77 contacts with switch point 80, so that, when a call comes in, the ringing current flows through a circuit including the switch 17, the conductors 81 and the coils 84. The energization of said coils 84 causes an attraction of the hook 85*a* against the action of the spring 86, which releases a bar 87 secured to a frame 88 on which the arms 39 and 85 are mounted. The frame 87 therefore swings, under the action of the spring 89, about the pivots 90, to a position electrically connecting the arm 39 with the fixed contact 47.

The switch 17, when thrown to its position marked "Telephone", also contacts switch point 30 with switch point 32, and the switch 19, when thrown to its position marked "Telephone-microphone", contacts switch point 57 with switch point 59 and switch point 61 with switch point 62. Consequently, with the switches 17 and 19 in said positions and with the switch 66 thrown toward the turntable 14 (in Figs. 4 and 5), the closing of the contacts 39 and 47, caused by an incoming call, as previously explained, connects the telephone line to the phonograph head 45 through a circuit including a conductor 27, closed switch points 30 and 32, conductor 35, closed contacts 39 and 47, conductor 50, closed contacts 52 and 54, conductor 56, closed switch points 57 and 59, conductor 60, closed switch points 61 and 62, conductor 64, switch 66, conductor 70, the phonograph head 45, conductor 44, closed contacts 41 and 37, conductor 34, closed switch points 31 and 29, and the other conductor 27.

The device requires a power supply for running the turntables 14 and 15, and for other purposes all of which will be described hereinafter. In the embodiment of the invention illustrated, a standard A. C. house lighting circuit is utilized and is connected to terminals 91, one of which is connected by a conductor 92 to one terminal of the single-pole single-throw power-control snap-switch 22. The other terminal of the latter switch is connected by a conductor 94 to a main relay terminal 95 connected to another terminal 96 in electrical connection with the movable contact arm 85. The latter is normally held apart from a fixed contact 97 in electrical connection with another terminal 99, which leads through a conductor 100 to a switch point 101 of the telephone switch 18. Said switch point 101 cooperates with switch point 102 connected by a conductor 104 to a switch point 105 of the telephone switch 17. Switch point 106, cooperating with said switch point 105, is connected by a conductor 107 to one terminal of the motor 109, which serves to run the turntable 14. Said motor 109 is installed below the turntable 14 in a housing 110 (Figs. 4 and 9), secured to the bottom of the platform 7. The other terminal of the motor 109 is connected by a conductor 111 to the other power supply terminal 91.

When the switches 17 and 18 are thrown to their positions marked "Telephone", switch point 105 contacts with switch point 106 and switch point 101 contacts with switch point 102.

The tripping of the main relay bar 87, caused by an incoming call, as previously explained, closes cooperating contacts 85 and 97, so that, with the switches 17 and 18 in their "Telephone" positions and the power supply switch 22 closed, current is supplied to the motor 109 from the power supply terminals 91 through a circuit including conductor 92, switch 22, conductor 94, closed contacts 85 and 97, conductor 100, closed switch points 101 and 102, conductor 104, closed

switch points 105 and 106, conductor 107, the motor 109, and conductor 111. The turntable 14, which carries a record 112 (Figs. 4, 5 and 9), is thus operated, and the spiral groove on the record 112, which is engaged by the needle of the phonograph head 45, moves the phonograph pivotal arm 46 from its starting position on the record 112 toward the latter's center, as in the usual practice. Since, as previously explained, the electromagnetic unit 45 is connected to the telephone line, the message recorded on the record 112 is transmitted to the party calling at the other end of said telephone line.

As illustrated in Figs. 4, 5, 6 and 9, the phonograph arm 46 has a depending bar or lug 114 fixed thereto, which bar 114 operates between two adjustment screws or stops 116 and 115. As most clearly shown in Fig. 6, these screws are respectively supported by brackets 117 and 118, adjustably secured to a U-shaped plate 119 slidably mounted by screws 120 on the platform 7. The plate 119 fixedly carries a depending bar or lug 121 extending through a slot 122 formed through the platform 7. An arm 124 (see Fig. 7), pivotally mounted beneath the platform 7, is drawn in constant engagement with the lug 121 by a spring 125. The lug 114, at a certain instant during the travel of the phonograph needle on the record 112 (upon transmission of the message thereon to the calling party), will engage the screw 115 and, thereafter, move the plate 119 and the lug 121 to one side, which causes the arm 124 to swing and close the cooperating contact arms 126 and 127 of a switch 129, also mounted beneath the platform 7.

Again referring to Fig. 11, one arm 127 of the switch 129 is connected by a conductor 130 to one terminal of a motor 131. As best shown in Fig. 4, the motor 131 is mounted on a shelf 132 inside the cabinet 1. The other terminal of the motor 131 is connected by a conductor 132 to the main relay terminal 96. The other arm 126 of the switch 129 is connected by a conductor 134 to the conductor 111. Consequently, with the power-supply switch 22 closed, upon closing of the switch 129 by the phonograph arm 46, current is supplied to the motor 131 from the power-supply terminals 91 through a circuit including conductor 92, switch 22, conductor 94, connected relay terminals 95 and 96, conductor 133, the motor 131, conductor 130, the closed contacts 126 and 127 of the switch 129, conductor 134, and portion 111*a* of conductor 111. The running of the motor 131 causes an arm 135, suitably geared to its shaft, to revolve.

Referring particularly to Fig. 9, one end 135*a* of the arm 135 normally rests on a switch 136, thereby holding its cooperating contact arms 137 and 139 normally open. As shown in Fig. 11, the switch 136 is connected in parallel with the switch 129, a conductor 140 electrically joining the contacts 137 and 126 and a conductor 141 electrically joining the contacts 139 and 127. The rotation of the arm 135, as previously explained, causes it to slide off the switch 136, which permits the latter's contacts 137 and 139 to close under the influence of a spring 142. The rotation of the arm 135 also causes the phonograph head 45 to be restored to its original position on the record 112, as will be hereinafter described. This resetting of the phonograph head 45 causes a reverse movement of the plate 119 and lug 121 to their original position, by reason of the engagement of the phonograph arm lug 114 with the screw 116, and hence, an opening of the switch 129. However, the movement of the motor arm 135 off the switch 136 and consequent closing of the switch 136 occur prior to said opening of the switch 129, so that, since said switches 129 and 136 are connected in parallel, the motor 131 continues to rotate for resetting the device in condition for another operation, as will be now described.

Referring to Figs. 4 and 9, the other end 135*b* of the arm 135 is pivotally connected to a link 144 connected to a spring 145 connected to a cable 146. When motor 131 and arm 135 start revolving, a pull is exerted on the cable 146, which raises the phonograph head 45 off the record 112. The link 144 is mechanically connected by another cable 147 to one arm of a bell-crank 149, suitably mounted in the cabinet 1. The other arm of the crank 149 is mechanically connected by a cable 150 to one arm of another bell-crank 151, also suitably mounted in the cabinet 1. The other arm of the crank 151 is connected by a cable 152 to a spring 154 fastened to a lug 155 fixedly secured to the phonograph shaft 156 extending down through the platform 7 from the phonograph arm 46. The rotation of the motor 131 and arm 135 exerts a pull on the lug 155, which causes the shaft 156 to pivot and the arm 46 to swing outwardly to a position governed by the adjustable stop 116 cooperating with the lug 114. Cable 152 is normally slack to permit raising of the phonograph head 45 off the record 112 prior to its outward horizontal movement with the phonograph arm 46. One half-revolution of the arm 135 from its position shown in Figs. 4 and 9 will raise the head 45 and swing it to a position above the outer edge portion of the record 112 where the spiral groove on said record begins. Another half-revolution of the arm 135 will then lower the needle of the phonograph head 45 into its starting position on the record 112. A spring 157 fixed at one end to the cabinet 1 is connected by a cable 159 to arm 151*a* of bell-crank 151, and serves to restore both cranks 149 and 151 and the cables 147, 150 and 152 to their normal or inoperative position shown in Fig. 4. One complete revolution of the arm 135, as above described, will stop its rotation, as a result of its striking and opening the switch 136, which controls the circuit of the motor 131. A pony brake 160, adapted for adjustment by a set screw 161, is utilized on the shaft of the motor 131 to prevent the arm 135 coasting on and again closing the switch 136 after it has once opened said switch 136 upon its full revolution as described.

The motor arm 135 is so geared to the motor 131 as to provide it with such low speed as to insure slow movements of the phonograph head 45 in the resetting operation of said motor. The springs 145, 154 and 157 permit the resetting operation to be automatically performed without any adjustments needed to the parts in mechanical connection with the motor 131, for any position or adjustment of either of the stops 115 and 116. It also becomes apparent that the provision of the motor 131 for resetting the device makes possible continuous, but positive movements of the phonograph head 45 back to its starting position on the record, so that neither record nor phonograph head needle are damaged.

The main relay 25 is equipped with another coil 164, which, as illustrated in Fig. 11, is connected at one end with the terminals 95 and 96 and at the other end with a terminal 165 leading by a conductor 166 to the conductor 130.

Thus, said coil 164 is permanently connected in parallel with the motor 131, so that the closing of the switch 129, by reason of the movement of the stop 115 with the phonograph arm extension 114, will not only start the motor 131 running, as previously explained, but will also energize the coil 164, which therefore attracts the frame 88, causing an opening of the cooperating contacts 39 and 47 and an opening of the cooperating contacts 85 and 97. From previous description it is clear that this, on the one hand, disconnects the electromagnetic unit 45 from the telephone line and, on the other hand, interrupts the current to the motor 109, stopping the latter. The coils 84 being then de-energized, which permits the spring 86 to act on the hook 85, the energization of the coil 164 also causes the bar 87 to be engaged by the hook 85, whereby the main relay parts are restored to their normal inoperative position shown schematically in Fig. 11.

Referring to Fig. 9, end 135*b* of the motor arm 135 is also pivotally connected to a link 167 in mechanical connection through a spring 169 to a bell-crank 170, suitably mounted in the cabinet 1. Arm 170*a* of said crank 170 serves as a brake to the turntable 14 and is normally held out of engagement therewith by a spring 171. The rotation of the motor 131, caused by the closing of the switch 129, as previously described, will operate the brake 170*a*, which stops the rotation of the turntable 14 prior to the resetting operation of the phonograph head 45 on the record 112 on said turntable 14.

Upon opening of the switch 136, as previously explained, at the end of said revolution, the coil 164 is de-energized.

It now becomes apparent that there has been provided a simple and reliable apparatus which will automatically deliver a message over the telephone line to the party making the call and which will be automatically reset in condition for again delivering said message when a succeeding call comes in.

Preferably, it is made known to the calling party, by a statement transmitted to him from the record 112, that a machine is giving him the message he hears. If it is desired to also record what he may have to say, it may also be stated, at the end of the outgoing message transmitted to him, that the machine is ready to receive his own message.

Referring to Figs. 4, 5 and 6, for recording purposes there is provided a lever 174, which carries a mercury switch 175 at one end and which rests on a bracket 176 fixed to the platform 7 and serving as a fulcrum. The lever 174 is also pivotally connected to one end of a link 177 extending through the platform 7. The other end of the link 177 is pivotally connected to another link 179 pivotally mounted at one end beneath the platform 7. An arm 181 is adjustably secured to the other end of the lever 174, as by the screw and nut 182, and is normally held by a spring 184 beneath a horizontally disposed ledge 186 fixed to the phonograph arm 46. In this position of the arm 181, the terminals of the mercury switch 175 are open-circuited.

When the message on the record 112 is being transmitted to the calling party, the phonograph arm 46 moves across the record 112 toward its center and the ledge 185 slides on the arm 181 toward its outer free end, maintaining an open-circuit at the switch 175. The arm 181 is so adjusted on the lever 174 that, upon completion of the statement telling him the machine is ready to record, it is released from beneath the ledge 185, causing the spring 184 to tip the mercury switch 175. The terminals of the latter switch are then short-circuited.

Now referring to the wiring diagram (Fig. 11), the terminals of the switch 175 are connected by conductors 186 and 187 to switch points 189 and 190 of the telephone switch 18, respectively. Switch point 191 cooperates with said switch point 189 and is connected by a conductor 192 to conductor 94 (leading through the switch 22 to a power-supply terminal 91). Said switch point 190 is connected by a conductor 194 to a terminal of a switch 195, the other terminal of which is connected by a conductor 196 to a terminal of a motor 197 serving to operate the turntable 15. The switch 195 is installed on the platform 7 near the turntable 15, as shown in Fig. 4. The motor 197 is installed in a housing 199 (Figs. 4 and 8), secured beneath the platform 7. The other terminal of the motor 197 leads through a conductor 200 to a switch point 201 of the telephone switch 21. The latter switch, as will be more clearly understood hereinafter, permits recording either on a flat disc on the turntable 15 or on a regular dictaphone. Switch point 202 cooperates with said switch point 201 and is connected by a conductor 204 to conductor 111 (leading to the other power supply terminal 91).

The switch 18, when thrown to its position marked "Telephone", contacts the switch points 189 and 191, and the switch 21, when thrown to its position marked "Record playing", contacts the switch points 201 and 202. Thus, with the switches 18 and 21 in said positions, and with the switches 22 and 195 closed, the closing of the mercury switch 175, by the action of the cooperating parts 181 and 185, as previously explained, connects the motor 197 to the power supply through a circuit including conductor 92, switch 22, conductor 192, closed switch points 191 and 189, conductor 186, closed switch 175, conductor 187, conductor 194, closed switch 195, conductor 196, the motor 197, conductor 200, closed switch points 201 and 202, conductor 204, and portions 111*b* and 111*a* of conductor 111. The closing of the mercury switch 175 therefore causes the turntable 15 to revolve, if the telephone switch 15 is initially thrown to its "record playing" position.

The coil 205 of the secondary relay 26 is in electrical connection with terminals 206 and 207 leading through conductors 209 and 210 to conductors 194 and 111, respectively. From previous description, it is clear that the mercury switch 175 also controls the branch circuit in which the coil 205 is connected, so that, with the switch 18 in its "telephone" position and with the switch 22 closed, the closing of the mercury switch 175 will cause current to be supplied from the power-supply terminals 91 to the coil 205. The energization of said coil 205 causes it to attract the contact arms 37 and 52, which breaks the connections at the cooperating contacts 37 and 41 and at the cooperating contacts 52 and 54. The phonograph head 45 is therefore disconnected from the telephone line terminals 28.

The secondary relay 26 is equipped with further fixed contacts 211 and 212 which also cooperate with the movable contacts 37 and 52, respectively. The energization of the coil 205 also causes the arms 37 and 52 to contact, respectively, with the fixed contacts 211 and 212. The latter are in electrical connection, respectively, with terminals 214 and 215 leading through conduc-

tors 216 and 217, respectively, to contacts 219 and 220 of a double-pole double-throw flexible contact switch 221, operated by a button or handle 222. Contacts 224 and 225 of the switch 221 are normally in contact, respectively, with said contacts 219 and 220, and are connected by conductors 226 and 227, respectively, to one terminal of a primary winding 229 of a transformer 230 and to a switch point 231 on the telephone switch 20. Switch point 232, which cooperates with said switch point 231, is in electrical connection by a conductor 234 with another switch point 235 of the switch 20. Switch point 236, which cooperates with said switch point 235, leads by a conductor 237 to the other terminal of the transformer primary winding 229.

When the switch 20 is thrown to its position marked "Telephone-microphone", switch point 231 contacts with switch point 232 and switch point 235 contacts with switch point 236. As previously described, the main relay contacts 39 and 47 are closed when the device is operating to answer an incoming call. With the switch 17 in its "telephone" position and the switch 20 in its "telephone-microphone" position, the closing of the mercury switch 175 therefore causes connection of the transformer primary winding 229 to the telephone line through a circuit including closed switch points 29 and 31 of the switch 17, conductor 34, closed contacts 37 and 211 of the secondary relay 26, conductor 216, closed contacts 219 and 225 of the switch 221, conductor 226, the winding 229, conductor 237, closed switch points 236 an 235 of the switch 20, conductor 234, closed switch points 232 and 231 of the switch 20, conductor 227, closed contacts 224 and 220 of the switch 221, conductor 217, closed contacts 212 and 52 of the secondary relay 26, conductor 50, closed contacts 47 and 39 of the main relay 25, conductor 35, and closed switch points 32 and 30 of the switch 17.

The secondary winding 239 of the transformer 230 is connected by conductors 240 and 241 in parallel with the resistance of a volume control rheostat 242. Conductors 244 and 245 connect the terminals of the rheostat 242, respectively, with input terminals 246 of the amplifier of the radio set 2. A condenser 247 is shunted across the conductors 244 and 245 to prevent transmission, to the radio amplifier, of any noise that might be caused by the various motors used in the device. The provision of the transformer 50 prevents connection of the telephone line with the radio circuit at any time during the operation of the device.

The output terminals 249 of the amplifier of the radio set are connected by conductors 250 and 251 to the primary winding 252 of the loud speaker transformer 254. The terminals of the secondary winding 255 of the transformer 254 are connected by conductors 256 and 257, respectively, to one terminal of the actuating coil 259 of the electrodynamic speaker 260 and to a main relay terminal 261 in electrical connection with a fixed contact 262 normally held in engagement with the movable contact arm 39. The other terminal of the coil 259 is connected to a switch 264, leading by a conductor 265 to a switch point 266 of the switch 18. Switch point 267, which cooperates with said switch point 266, is connected by a conductor 269 to a main relay terminal 270 in electrical connection with the contact arm 39.

When the switch 18 is thrown to its position marked "Telephone", switch point 266 contacts with switch point 267, so that, with the switch 264 in closed position, the loud-speaker coil 259 is normally in a circuit with the transformer secondary winding 255, said circuit including the winding 255, conductor 256, the coil 259, closed switch 264, conductor 265, closed switch points 266 and 267 of the switch 18, conductor 269, closed contacts 39 and 262 of the main relay 25, and conductor 257. Upon energization of the coils 84 of the main relay 25 by an incoming call, the contacts 39 and 262 become open-circuited, thereby automatically disconnecting the loud-speaker coil 259 from the winding 255 and preventing operation of the loud-speaker when the device is answering said call.

Conductor 250, leading from one amplifier output terminal 249, is connected by a conductor 271 to a switch-point 272 of the telephone switch 20. Switch point 274, which cooperates with said switch point 272, is connected by a conductor 275 to a switch point 276 of the telephone switch 21. Switch point 277 cooperates with said switch point 276 and leads by a conductor 279 to one terminal of the recording head 280, which is moved across the turntable 15 by the screw 281 when said turntable 15 is operated. In Fig. 5 the recording head 280 is shown removed from its operating screw 281 and positioned in a receptacle, which is provided for it in the platform 7 when not in use. The other terminal of the recording head 280 is connected by a conductor 282 to the conductor 251, leading to the other amplifier output terminal 249.

When the switch 20 is thrown to its position marked "Telephone-microphone", switch point 272 contacts with switch point 274, and when the switch 21 is thrown to its position marked "Record playing", switch point 276 contacts with switch point 277. Thus, with the switches 20 and 21 in said positions, the recording head 280 is connected to the output of the radio set amplifier through a circuit including portion 250*a* of the conductor 250, conductor 271, closed switch points 272 and 274 of the switch 20, conductor 275, closed switch points 276 and 277 of the switch 21, conductor 279, the recording head 280, conductor 282, and portion 251*a* of the conductor 251.

Since the amplifier of the radio set is utilized for recording the incoming message from the party calling, automatic means are provided for heating the tubes of said amplifier and applying the proper voltages thereto. A base outlet or similar device 284, the terminals of which are in electrical connection, respectively, with the conductor 111 and with the main relay terminal 99, is adapted to receive a plug (not shown), which may lead to the battery eliminator (not shown) of the radio set 2. Upon energization of the coils 84 of the main relay 25 by an incoming call, the contacts 85 and 97 close, as has already been described, so that, with the controlling switch 22 closed, voltage is supplied across the terminals of the base outlet 284, because of its connection, on one side, to one terminal 91 through portion 111*a* of conductor 111, and its connection, on the other side, to the other terminal 91 through terminal 99, closed contacts 85 and 97, connected terminals 96 and 95, conductor 94, closed switch 22, and conductor 92. Thus, the incoming call causes the amplifier of the radio set to be automatically rendered operative.

It now becomes apparent that, with the various switches in the positions described, the calling party's conversation, upon closing of the mercury switch 175 at a predetermined point of

the travel of the phonograph head 45 across the record 112, will be transmitted from the telephone line through the transformer 230 to the amplifier of the radio set 2, amplified by said amplifier, and recorded by the recording head 280 on the blank 285 (Fig. 4) on the turntable 15.

Switch points 202 and 276 of the switch 21 contact with other switch points 286 and 287, respectively, when said switch 21 is thrown to its position marked "Dictaphone". The terminals 289 of a socket 290 (Fig. 3), installed with the switch 21 on the cabinet side wall 24, are connected by conductors 291 and 292 to the switch point 286 and to the conductor 194, respectively. The terminals 294 of another socket 295 (Fig. 3), also installed with the switch 21 on the cabinet side wall 24, are connected by conductors 296 and 297 to the switch-point 287 and to the conductor 251, respectively. Sockets 290 and 295 are adapted to receive plugs (not shown), leading to the motor 299 and to the dictaphone recording head (not shown), respectively.

If it is desired to record the calling party's message on the dictaphone, the switch 21 is thrown accordingly to its "dictaphone" position. From previous description, it is clear that the latter position of the switch 21 disconnects the motor 197 from and connects the dictaphone motor 299 to the power supply terminals 91 and disconnects the recording head 280 from and connects the dictaphone recording head to the output of the radio set amplifier, so that, with the other switches in the positions described, the incoming message is then recorded on the dictaphone.

The switch 21, when thrown to its "off" position, open-circuits the switch points 202 and 276, so that both the motor 197 and the motor 299 and both the recording head 280 and the dictaphone recording head are rendered inoperative. This "off" position of the switch 21 enables the playing of records on the turntable 15, as will be more clearly understood hereinafter. For this purpose, a switch 300, shunted across the switch points 201 and 202, is provided, which enables running the motor 197 independently of the switch 21.

There is a blank grooved space, on the record 112, following the message recorded on it, so that the phonograph head 45 is still moving on the record 112 while the incoming message is being recorded either on the disc 285 or on the wax cylinder in the dictaphone. This blank space is of such length as to allow sufficient time for the incoming message to be taken. At a predetermined point, the lug 114 on the phonograph arm 46 hits the stop adjustment screw 115, as already described. The motor 131 then operates to reset the phonograph head 45 to its starting position, but also to reset the arm 181 under the ledge 185, as will be presently described.

Referring to Figs. 4, 6 and 9, the spring 145, in mechanical connection through the link 144 with the rotary arm 135, has connected thereto, besides the cable 146, another cable 301, itself connected to the swinging end of the link 179. The closing of the switch 129 by the lug 114 engaging the stop 115 and consequent rotation of the motor 131 and arm 135, as has been seen, also causes a pull on the link 177, which lowers the arm 181 and raises the mercury switch 175. The resetting of the arm 46 to its starting position brings the ledge 185 over the arm 181. The arm 135, having completed its full revolution, stops, the arm 181 being then under the influence of the spring 184 in its normal position of rest in contacting relation with the ledge 185 beneath the latter.

The raising of the mercury switch 175, by the action of the rotary arm 135, open-circuits its terminals, whereby current to the motor 197 (or to the motor 299) is interrupted, and the coil 205 is de-energized, which resets the secondary relay 26, the movable contacts 37 and 52 of which again come into engagement, under the influence of the spring 40, with the fixed contacts 41 and 54, respectively. As already stated, the main relay 25 is reset by energization of the coil 164, subsequently de-energized by the opening of the switch 136 by the rotary arm 135. This resetting of the relay 25 arrests the phonograph motor 109, by reason of the open-circuit at the contacts 85 and 97, and disconnects the transformer primary winding 229 from the telephone line, by reason of the open-circuit at the contacts 39 and 47, so that the device is again in condition for answering an incoming call. It is observed that the open-circuit at the contacts 85 and 97 also interrupts the current and voltage supply to the tubes of the amplifier. The resetting of the relay 25 also places the loud-speaker actuating coil 259 in circuit with the transformer winding 255, as a result of the contacting of the contacts 39 and 262. Evidently, the stopping of the motor 197 (or of the motor 299) prevents further movement of the recording head 280 on the disc 285 (or of the dictaphone recording head on its wax cylinder), so that succeeding incoming messages may be recorded from this point on the disc 285 (or on the dictaphone cylinder).

If the subscriber desires to give a message only, the switch 195 may be opened, preventing operation of the turntable 15 and recording thereon. If desired, the arm 181 may be so adjusted on the lever 174 that it will not be released from the ledge 185 and therefore not cause the closing of the mercury switch 175, during the travel of the lug 114 between the adjustment screws 114 and 115. As shown in Fig. 5, the switch 195 and the volume control rheostat 242 are mounted on the platform 7 on the side of the recording turntable 15.

It is to be particularly noted that the device is so constructed that its automatic operation, including its stopping and resetting, is all accomplished by means cooperating with the arm of the message giving phonograph mechanism. This makes possible recording on either a phonograph disc or on a dictaphone, with only few additional parts, as the recording time is taken care of by the fact that the message giving record 112 is grooved sufficiently to allow proper time to make a record of the incoming message. The adjustment screw 115 evidently permits regulating the time period within which the incoming message is to be recorded, this being the only adjustment necessary.

The other uses of the device will now be described, each resulting from a throwing of the switches 17, 18, 19, 20 and 21 into their required positions.

Referring to Fig. 11, switch points 302 and 304 of the switch 17, which are connected by conductors 305 and 306 to conductors 192 and 100 respectively, make contact when said switch 17 is thrown to its position marked "Home amusement". This supplies voltage to the base outlet 284, it being observed that one terminal thereof is in permanent electrical connection with a power supply terminal 91 and the other in electrical connection, when switch 92 is closed, through closed switch points 302 and 304, with the other

power supply terminal 91. Thus, current and potential are supplied to the amplifier tubes of the radio set 2 for their operation, when, for example, it is desired to utilize the amplifier for the playing or the making of phonograph records, as will be more clearly understood hereinafter. The "home amusement" position of the switch 17 disconnects the switch points 29 and 30 from the switch points 31 and 32 and hence the device from the telephone line, and also disconnects the switch points 76 and 77 from the switch points 79 and 80 and hence the device from the telephone ringing circuit. It also interrupts the switch points 105 and 106. The switch 17, when thrown to its "off" position, open-circuits the switch points 302 and 304, thereby removing voltage at the base outlet 284.

Switch point 102 of the switch 18 is also connected by a conductor 307 to one terminal of a switch 309, the other terminal of which is in electrical connection with the conductor 107 leading to one terminal of the motor 109. Said switch 18 is left in its "telephone" position for home amusement purposes, such as the playing of phonograph records on the turntable 14. With the switch 17 in its "home amusement" position and the switch 22 closed, the motor 109 for this turntable 14 may thus be operated at will by the throwing of the switch 309, which then controls the following circuit: one supply terminal 91, conductor 92, closed switch 22, portion 94*a* of conductor 94, portion 192*a* of conductor 192, conductor 305, closed switch points 302 and 304 of switch 17, conductor 306, portion 100*a* of conductor 100, closed switch points 101 and 102 of switch 18, conductor 307, the switch 309, the motor 109, conductor 111 and the other supply terminal 91. The switch 309 is installed on the platform 7, next to the record playing turntable 14. As previously explained, the loud-speaker 260 is connected in circuit, with the switch 18 in its "telephone" position.

The switch 19, when thrown to its position marked "phonograph", open-circuits the switch points 61 and 62 and connects the switch point 62 to another switch point 310, which leads by a conductor 311 to a terminal of another primary winding 312 of the transformer 230. The other terminal of said winding 312 is connected by a conductor 314 to conductor 237 leading to switch point 236 of the switch 20. The latter switch, when thrown to its position marked "Radio-phonograph", still contacts the switch points 235 and 236, but disconnects the switch points 231 and 232 and contacts the switch point 232 with another switch point 315, connected by a conductor 316 to conductor 44 leading to the phonograph 45. Consequently, with the switches 19 and 20 thrown to their phonograph positions, as described, and with the switch 66 thrown toward the turntable 14, the phonograph head 45 is connected to the transformer primary winding 312 through a circuit including the phonograph head 45, conductor 70, closed switch 66, conductor 64, closed switch points 62 and 310 of the switch 19, conductor 311, the winding 312, conductor 314, portion 237*a* of conductor 237, closed switch points 236 and 235 of the switch 20, conductor 234, closed switch points 231 and 315 of the switch 20, conductor 316, and portion 44*a* of conductor 44. Thus, when the turntable 14 is rotated for the playing of a record thereon by the throwing of the switch 309, as previously explained, the electrical impulses received by the electromagnetic unit 45 moving on said record are transmitted through the transformer 230 to the amplifier input terminals 246, the tubes of which are rendered operative, as previously explained.

The switch 20, when in its "radio-phonograph" position, also open-circuits the switch points 272 and 274, which disconnects the recording head 280 (or the distaphone recorder) from the output terminals 249, regardless of the position of the switch 21. The amplified impulses are therefore directly transmitted to the loud-speaker transformer primary winding 255 and, with switch 264 closed, are reproduced into sound by the loud-speaker 260, the actuating coil 259 of which is then connected to the secondary winding 255 through closed contacts 39 and 262 of the main relay 25 and through closed switch points 266 and 267 of the switch 18.

Switch points 317 and 319 of the switch 19 are in electrical connection with one another by a conductor 320 and are normally out of contact with their cooperating switch points 321 and 322, respectively, when the switch 19 is in its "telephone-microphone" position. When the switch 19 is thrown to its position marked "Radio", contact is made between switch points 317 and 321 and between switch points 319 and 322. Switch point 322 is connected by a conductor 324 to conductor 244, leading to an amplifier input terminal 246. Switch point 321 is connected by a conductor 325 to a switch point 326 of the switch 20, which switch point 326 is connected by a conductor 327 to conductor 245, leading to the other amplifier input terminal 246. With the switches 19 and 20 in their radio positions, as described, the input terminals 246 are therefore short-circuited through conductor 324, closed switch points 322 and 319 of the switch 19, conductor 320, closed switch points 317 and 321 of the switch 19, conductor 325 and conductor 327, this rendering the transformer 230 inoperative and permitting the use of the radio set 2 including its amplifier for receiving "broadcast" programs, without any possibility of transmission of telephone or radio impulses through the transformer 230. As above described, with the switch 20 in its radio position, the amplifier output is connected directly to the winding 252 of the transformer 254 of the loud-speaker 260, which is then operative, if switch 264 is in closed position. The various tubes of the radio set 2 may be rendered operative by the volume control 10, in a manner known in the radio art.

When playing phonograph records, the contacts 317 and 321 of the switch 19, which is then in its "phonograph" position, are open-circuited, whereby the short-circuit across the amplifier input terminals 246 is removed.

For the making of records, either for home amusement or for use in answering the telephone automatically, a microphone 328 is provided which may be kept, when not in use, in a cabinet compartment (see Fig. 2), having a door 330 thereto. The microphone 327 is connected by conductors 331 and 332 to a portable plug 333, adapted for insertion into a socket 334 installed in a panel 335 in back of the door 330. Referring to Fig. 11, the terminals 336 and 337 of said socket 334 are in electrical connection, respectively, by a conductor 339 with a contact 340 of the switch 221 and by conductors 341 and 342 and a battery 344 therebetween with a contact 345 of the switch 221.

The switch 221 is installed in the panel 335, so that the door 330, when closed, abuts the button

222, maintaining the switch contacts 340 and 345 normally out of engagement with the contacts 225 and 224, respectively. A pull on the button 222 moves the contacts 225 and 224 out of engagement with the contacts 219 and 220, respectively, and into engagement with the contacts 340 and 345, respectively. It is not likely that the microphone 327 be left connected, as the closing of the cabinet door 330 automatically pushes in the button 222, disconnecting the microphone 327 and resetting the switch 221 in position to enable the device to answer a telephone call automatically, as described. (The switch 264, controlling the operation of the loud-speaker 260, is also installed in the panel 335).

With the switch 221 in its microphone connection and with the switch 20 in its "telephone-microphone" position, the microphone 327 is connected in a circuit with the primary winding 229 of the transformer 230, which circuit includes the microphone 327, battery 344, closed contacts 345 and 224 of the switch 221, conductor 227, closed switch points 231 and 232 of the switch 20, conductor 234, closed switch points 235 and 236 of the switch 20, conductor 237, the winding 229, conductor 226, closed contacts 225 and 340 of the switch 221, and conductor 339.

The switch 19 is then also in its "telephone-microphone" position, whereby no short circuiting by said switch 19 occurs across the amplifier input terminals 246. Consequently, the electrical impulses which the microphone 327 converts from the sound it receives are properly transmitted, through the transformer 230, to the amplifier of the radio set 2. Since the switch 17 is in its "home amusement" position, the tubes of said amplifier are then operative. With the switch 21 in its "record playing" position, the switch 20, which is in its "telephone-microphone" position, connects the output terminals 249 of the amplifier to the phonograph recording head 280, as previously explained. The switch 18 may be in its "telephone" position, the switch 264 being, in this case, thrown open to disconnect the loud-speaker 260 from circuit.

A switch 346, installed on the platform 7 near the recording turntable 15, is in electrical connection at its terminals with switch points 190 and 191 of the switch 18. With switches 22 and 195 closed and with switch 21 in its "record playing" position, the closing of the switch 346 will start the motor 197 for the recording turntable 15 running, by reason of its insertion in a circuit including one power supply terminal 91, conductor 92, closed switch 22, portion 94*a* of conductor 94, conductor 192, switch point 191 of the switch 18, the closed switch 346, conductor 194 (connected to switch point 190 of the switch 18), closed switch 197, conductor 200, closed switch points 201 and 202 of the switch 21, conductor 204, portions 111*b* and 111*a* of conductor 111, and the other terminal 91.

It now becomes apparent that, with the various switches in the positions described, whatever is spoken into the microphone 327 will be transmitted in the form of electrical impulses through the amplifier of the radio set 2 and recorded by the recorder 280 on the blank record which is initially placed on the turntable 15. The intensity of the speech or music recorded may be regulated by the rheostat 242.

Evidently, by throwing the switch 21 to its "dictaphone" position, a dictaphone may be used to receive the subject-matter which it is desired to record thereon.

For hearing whatever telephone messages may have been automatically recorded by the device on the disc 285 on the turntable 15, the phonograph head 347 on the phonograph arm 71 is properly positioned on said disc 285, the switch 19 is thrown to its "radio-phonograph" position, switch 20 to its "phonograph" position, and switch 66 toward turntable 15. From previous description, it is clear that, since both phonograph heads 45 and 347 lead to the same circuit through the medium of the switch 66 which controls their connection to said circuit, then the phonograph head 347 will be connected to the primary winding 312 of the transformer 230; no short-circuit will take place across the amplifier input terminals 246, and the output terminals 249 will lead directly to the loud-speaker transformer 260. Switch 17 is thrown to its "home amusement" position, which will operate the amplifier tubes, while switch 18 is left in its "telephone" position, which will connect the loud-speaker 260, if switch 264 is closed. The recording head 280 is removed from its operating screw 281, the closing of the switch 346 will run the motor 197 as previously described, switches 22 and 195 being closed and either switch 300 being closed or switch 21 being thrown in its "record playing" position. The recorded message or messages will therefore be verbally reproduced by the loud-speaker 260. The phonograph 71 may thereafter be restored to its position of rest on the bracket 72, which automatically disconnects the head 347 from circuit and connects the head 45 into circuit.

With the various switches in the positions required for the playing of a phonograph record on the turntable 14, as described, it is clear that the arm resetting mechanism which has been described, including the lug 114 and stops 115 and 116 cooperating therewith, the switches 17 and 18, and the motor 131 and mechanical parts connected therewith, will operate to repeat said record automatically, if the position of the stop 115 is properly adjusted. If record repeating is not desired, however, the stop 115 is positioned beyond the path of travel of the lug 114 over the record to be played. Evidently, records of any size may be played and the repeating of the same is possible, by proper adjustment to both stops 114 and 115.

For recording the telephone conversation when the telephone is answered personally by the subscriber, the switch 17 is thrown to its "telephone" position, connecting the telephone line to the device. The switch 18 is thrown initially to its position marked "Amplifier", which contacts switch point 101 with another switch point 370, in electrical connection by a conductor 371 with the conductor 192. With switch 22 closed, this supplies voltage to the base outlet 284, by reason of its connections to the power-supply terminals 91, on one side, through portion 111*a* of the conductor 111, and, on the other side, through conductor 100, closed switch points 101 and 370 of the switch 18, conductor 371, conductor 192, portion 94*a* of conductor 94, closed switch 22, and conductor 92. Consequently, the tubes of the amplifier of the radio set are heated and proper potentials are applied thereto, for their operation.

Switch 346 is closed, which operates the turntable 15, switch 195 being closed and switch 21 being in its "record playing" position. The closing of the switch 346 also energizes the coil 205 of the secondary relay 26, it being observed that said coil 205 is then connected to the power-supply terminals 91 through a circuit including

portions 111a and 111c of conductor 111, conductor 210, the coil 205, conductor 209, conductor 194, closed switch 346, conductor 192, portion 94a of conductor 94, closed switch 22, and conductor 92. The movable contacts 37 and 52 of the relay 26 then engage the fixed contacts 211 and 212.

The switch 18 is next thrown to its position marked "Telephone recording", which maintains the contacting relation of the switch points 372 and 374, connected by conductors 375 and 376 to conductor 50 and to conductor 35, respectively. Hence, with the switch 20 in its "telephone-microphone" position and with the switch 221 pushed in, the telephone line is connected to the primary winding 229 of the transformer 230 through a circuit including closed switch points 29 and 31 of the switch 17, conductor 34, closed contacts 37 and 211 of the relay 26, conductor 216, closed contacts 219 and 225 of the switch 221, conductor 226, the winding 229, conductor 237, closed switch points 236 and 235 of the switch 20, conductor 234, closed switch points 231 and 232 of the switch 20, conductor 227, closed contacts 224 and 220 of the switch 221, conductor 217, closed contacts 212 and 52 of the relay 26, portion 50a of conductor 50, conductor 375, closed switch points 372 and 374 of the switch 18, conductor 376, portion 35a of the conductor 35, and closed switch points 32 and 30 of the switch 17.

Since the switch 20 is in its "telephone-microphone" position and the switch 21 in its "record playing" position, the output of the amplifier is connected to the recording head 280. The loud-speaker 260 is inoperative, because of the switch 18 being in its "record playing" position, which open-circuits its switch points 266 and 267.

The switch 19 is in its "telephone-microphone" position, which prevents short-circuiting the terminals 246 leading to the amplifier.

From the above description, it is clear that whatever conversation takes place between the calling party and the subscriber will be recorded on the disc on the turntable 15. Thus, the device may be advantageously used in business to record important transactions conducted over the telephone, as well as in stores for recording orders communicated by telephone. The party calling need not know that his statements are being recorded. Evidently, if the switch 21 is thrown to its "dictaphone" position, the conversation or order may be recorded on a dictaphone.

For recording "broadcast" programs, the switch 20 is thrown to its position marked "Radio recording", contacting its switch points 272 and 326 with its switch points 380 and 381, respectively. Switch point 380 is connected by a conductor 382 to conductor 324 and switch point 381 is in permanent connection with switch point 274 by a conductor 384. This position of the switch 20 therefore short-circuits the input terminals 246 through conductor 327, closed switch points 326 and 381, and portion 324a of conductor 324. Switch 21 being in its "record playing" position, it also connects the output terminals 249 to the recording head 280 through a circuit including portion 250a of conductor 250, conductor 271, closed switch points 272 and 380 of the switch 20, conductor 384, conductor 275, closed switch points 276 and 277 of the switch 21, conductor 279, the recording head 280, conductor 282, and portion 251a of conductor 251. For operating the amplifier tubes, switch 17 is thrown to its "home amusement" position. Switch 264 is opened to disconnect the loud-speaker 260. With switches 22 and 195 closed, the closing of the switch 346 runs the turntable 15 and actuates the recording head 280. With the radio set properly tuned in, the radio program being received will therefore be properly recorded on the phonograph disc on the turntable 15.

It now becomes apparent that there has been provided a device which satisfies the various objects of the invention. It is understood that the apparatus, which is illustrated in the drawings and which has been described herein, is subject to various modifications without departing from the spirit of the invention.

The telephone switches 17, 18, 19, 20 and 21 all have vacant contacts, so that, when television which is now in the course of development is perfected, it may be possible to associate with the device a television apparatus permitting a photograph of the party calling to be taken on a negative.

Evidently, the terminal 74 may be connected in parallel or in series with the telephone ringer. As a matter of fact they may be connected to the ringing circuit in any manner known in the telephone art to permit energization of the coils 84 by the ringing current.

What is claimed is:

1. In a device for use at a telephone station for delivering a message to and recording a message from a calling party, a phonographic apparatus including a rotatable disc record having the outgoing message recorded thereon and a pivotal arm having a transmitting head to cooperate with said record, a second phonograph apparatus having a rotatable blank record to receive the incoming message and a movable recording head to cooperate with said blank, relay means for rendering said transmitting head operative, a pivotal lever to cooperate with said arm, means including a switch controlled by said lever for rendering said transmitting head inoperative and said recording head operative upon transmission of the outgoing message, a motor and means cooperating therewith for resetting said arm and transmitting head, means including another switch controlled by said arm for starting said motor after a period of time permitting recording of the incoming message and for interrupting its rotation upon termination of its resetting operation, means also cooperating with said motor for resetting said lever, said first switch and means associated therewith being reset and said recording head being rendered inoperative by the resetting of said lever, and means cooperating with said second switch for resetting said relay means.

2. In a device for use at a telephone station for delivering a message to and recording a message from a calling party, a phonograph apparatus including a rotatable disc record having the outgoing message recorded thereon and a pivotal arm having a transmitting head to cooperate with said record, a second phonograph apparatus having a rotatable blank record to receive the incoming message and a movable recording head to cooperate with said blank, relay means for rendering said transmitting head operative, a pivotal lever to cooperate with said arm, means including a switch controlled by said lever for rendering said transmitting head inoperative and said recording head operative upon transmission of the outgoing message, said lever being adjustable in length, an adjustable stop movable by said arm after a period of time permitting recording of the incoming message, means including another switch controlled by said stop for resetting said arm

and transmitting head and for resetting said lever, said first switch and means associated therewith being reset and said recording head being rendered inoperative by the resetting of said lever, and means cooperating with said second switch for resetting said relay means.

3. In a device for use at a telephone station for delivering a message to and recording a message from a calling party, a phonograph apparatus including a rotatable disc record having the outgoing message recorded thereon and a pivotal arm having a transmitting head to cooperate with said record, a second phonograph apparatus having a rotatable blank record to receive the incoming message and a movable recording head to cooperate with said blank, relay means for rendering said transmitting head operative, a switch operated by said arm upon transmission of the outgoing message, other relay means associated with said switch for rendering said transmitting head inoperative and said recording head operative, another switch operated by said arm after a period of time permitting recording of the incoming message, means associated with said second switch for resetting said arm and transmitting head and for resetting said first switch, said second relay means being reset and said recording head being rendered inoperative by the resetting of said first switch, and means cooperating with said second switch for resetting said first relay means.

4. A device for use at a telephone station for delivering a message to and recording a message from a calling party comprising a phonograph apparatus including a rotatable disc record having the outgoing message recorded thereon, a pivotal arm having a transmitting head to cooperate with said record, and a motor for rotating said record; another apparatus having a blank record to receive the incoming message, a recording head to cooperate with said blank, and a motor to actuate said blank and recording head; a relay mechanism for rendering said transmitting head and first motor operative; a switch actuated by said arm upon transmission of the outgoing message; another relay mechanism controlled by said switch for rendering said transmitting head inoperative and said recording head and second motor operative; another switch actuated by said arm after a period of time permitting recording of the incoming message; means rendered operative by said second switch for resetting said arm and transmitting head and for resetting said first switch; said second relay mechanism being reset and said recording head and second motor being rendered inoperative by the resetting of said first switch; and means also rendered operative by said second switch for resetting said first relay mechanism and for rendering said first motor inoperative.

5. A device for use at a telephone station for delivering a message to and recording a message from a calling party comprising an apparatus including a turntable to support a disc record having the outgoing message recorded thereon, a pivotal arm having a transmitting head to cooperate with the record, and a motor for rotating the turntable; another apparatus having a turntable to support a blank record to receive the incoming message, a recording head to cooperate with the blank, and a motor to actuate the turntable and recording head; relay means for rendering said transmitting head and first motor operative; a switch actuated by said arm upon transmission of the outgoing message; other relay means controlled by said switch for rendering said transmitting head inoperative and said recording head and second motor operative; another switch actuated by said arm after a period of time permitting recording of the incoming message; means rendered operative by said second switch for resetting said arm and transmitting head and for resetting said first switch; said second relay means being reset and said recording head and second motor being rendered inoperative by the resetting of said first switch; means also rendered operative by said second switch for resetting said first relay means and for rendering said first motor inoperative; manual switching means for controlling the operation of the device; and means controlled by said manual switching means and including a microphone, for recording the outgoing message on said first record in cooperation with said second apparatus.

6. A device for use at a telephone station for delivering a message to and recording a message from a calling party comprising an apparatus including a turntable to support a disc record having the outgoing message recorded thereon, a pivotal arm having a transmitting head to cooperate with the record, and a motor for rotating the turntable; another apparatus having a turntable to support a blank record to receive the incoming message, a recording head to cooperate with the blank, and a motor to actuate the turntable and recording head; relay means for rendering said transmitting head and first motor operative; a switch actuated by said arm upon transmission of the outgoing message; other relay means controlled by said switch for rendering said transmitting head inoperative and said recording head and second motor operative; a second switch actuated by said arm after a period of time permitting recording of the incoming message; means rendered operative by said second switch for resetting said arm and transmitting head and for resetting said first switch; said second relay means being reset and said recording head and second motor being rendered inoperative by the resetting of said first switch; means also rendered operative by said second switch for resetting said first relay means and for rendering said first motor inoperative; manual switching means for controlling the operation of the device; said second apparatus being also provided with a pivotal arm and transmitting head; and means controlled by said manual switching means and including a loud-speaker, for audibly reproducing the recorded message in cooperation with the turntable, pivotal arm and transmitting head, and motor of said second apparatus.

7. A device for use at a telephone station for delivering a message to and recording a message from a calling party comprising an apparatus including a turntable to support a disc record having the outgoing message recorded thereon, a pivotal arm having a transmitting head to cooperate with the record, and a motor for rotating the turntable; another apparatus having a turntable to support a blank record to receive the incoming message, a recording head to cooperate with the blank, and a motor to actuate the turntable and recording head; an amplifier; manual switching means for controlling the operation of the device; said switching means permitting connection of said recording head in association with said amplifier; relay means for rendering said transmitting head and first motor operative; a switch actuated by said arm upon transmission of the outgoing message; other relay means con-

trolled by said switch for rendering said transmission head inoperative and said amplifier and second motor operative; another switch actuated by said arm after a period of time permitting recording of the incoming message; means rendered operative by said second switch for resetting said arm and transmitting head and for resetting said first switch; said second relay means being reset and said amplifier and second motor being rendered inoperative by the resetting of said first switch; means also rendered operative by said second switch for resetting said first relay means and for rendering said first motor inoperative; and means controlled by said manual switching means and including a loud-speaker, for audibly reproducing the message recorded on said second record in cooperation with said amplifier and with the turntable, pivotal arm and transmitting head, and motor of said first apparatus.

8. A device for use at a telephone station for delivering a message to and recording a message from a calling party comprising an apparatus including a turntable to support a disc record having the outgoing message recorded thereon, a pivotal arm having a transmitting head to cooperate with the record, and a motor for rotating the turntable; another apparatus having a turntable to support a blank record to receive the incoming message, a recording head to cooperate with the blank, and a motor to actuate the turntable and recording head; relay means for rendering said transmitting head and first motor operative; a switch actuated by said arm upon transmission of the outgoing message; other relay means controlled by said switch for rendering said transmitting head inoperative and said recording head and second motor operative; a second switch actuated by said arm after a period of time permitting recording of the incoming message; means rendered operative by said second switch for resetting said arm and transmitting head and for resetting said first switch; said second relay means being reset and said recording head and second motor being rendered inoperative by the resetting of said first switch; means also rendered operative by said second switch for resetting said first relay means and for rendering said first motor inoperative; and manual switching means for controlling the operation of the device; said manual switching means being adapted to render said recording head and second motor operative to record the calling party's conversation when the telephone at said station is answered manually.

9. A device for use at a telephone station for delivering a message to and recording a message from a calling party comprising an apparatus including a turntable to support a disc record having the outgoing message recorded thereon, a pivotal arm having a transmitting head to cooperate with the record, and a motor for rotating the turntable; another apparatus having a turntable to support a blank record to receive the incoming message, a recording head to cooperate with the blank, and a motor to actuate the turntable and recording head; relay means for rendering said transmitting head and first motor operative; a switch actuated by said arm upon transmission of the outgoing message; other relay means controlled by said switch for rendering said transmitting head inoperative and said recording head and second motor operative; a second switch actuated by said arm after a period of time permitting recording of the incoming message; means rendered operative by said second switch for resetting said arm and transmitting head; means cooperating with said arm and transmitting head resetting means for resetting said first switch; said second relay means being reset and said recording head and second motor being rendered inoperative by the resetting of said first switch; means also rendered operative by said second switch for resetting said first relay means and for rendering said first motor inoperative; manual switching means for controlling the operation of the device; and means controlled by said switching means and including a loud-speaker, for repeatedly audibly reproducing the message recorded on said second record in cooperation with said arm and transmitting head resetting means and with the turntable, pivotal arm and transmitting head, and motor of said first apparatus.

MORGAN J. LEWIS.