G. H. ZANE & S. A. KENNEDY.

POTATO-DROPPER.

No. 169,395. Patented Nov. 2, 1875.

Fig. 1.

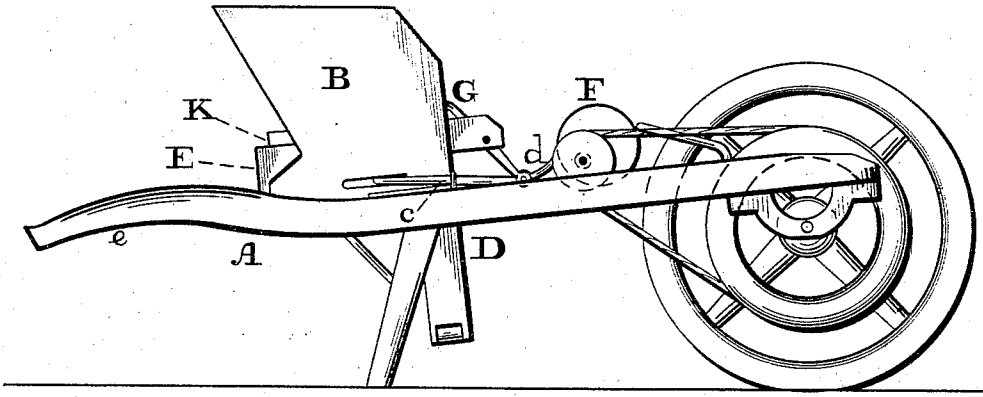

Fig. 2.

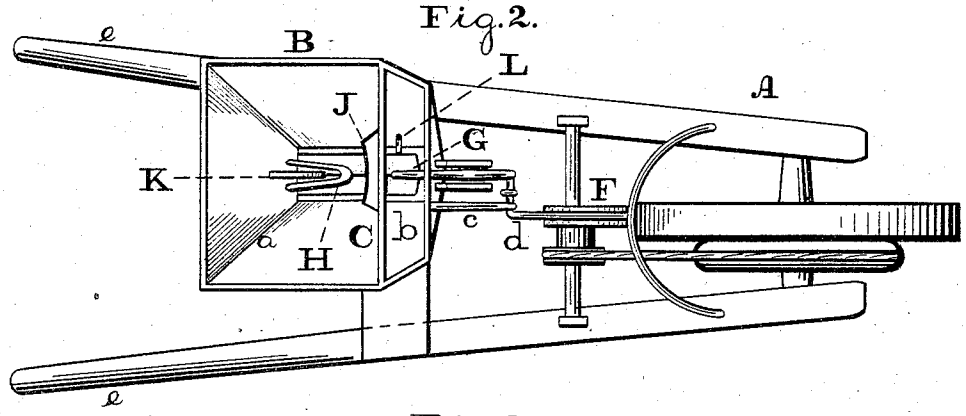

Fig. 3.

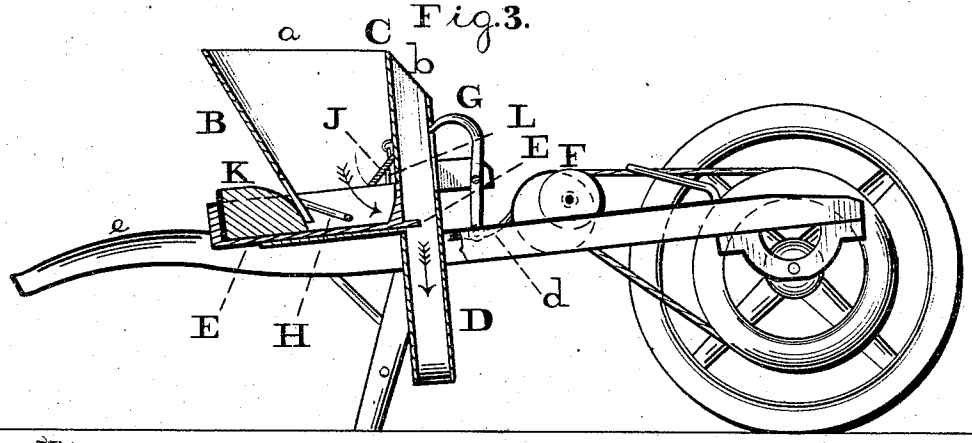

Witnesses:

Lewis F. Brous,

A. P. Grant.

Fig. 4.

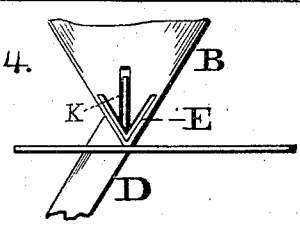

Inventors:

George H. Zane,

Samuel A. Kennedy.

by John A. Wiedersheim

Atty.

N. PETERS, PHOTO-LITHOGRAPHER, WASHINGTON, D. C.

UNITED STATES PATENT OFFICE

GEORGE H. ZANE, OF SHOEMAKERTOWN, AND SAMUEL A. KENNEDY, OF PHILADELPHIA, PENNSYLVANIA.

IMPROVEMENT IN POTATO-DROPPERS.

Specification forming part of Letters Patent No. **169,395**, dated November 2, 1875; application filed September 14, 1875.

To all whom it may concern:

Be it known that we, GEORGE H. ZANE, of Shoemakertown, in the county of Montgomery, and SAMUEL A. KENNEDY, of the city and county of Philadelphia, both of the State of Pennsylvania, have invented a new and useful Improvement in Potato-Droppers; and we do hereby declare that the following is a clear and exact description of the nature thereof, sufficient to enable others skilled in the art to which our invention appertains to fully understand, make, and use the same, reference being had to the accompanying drawings making part of this specification, in which—

Figure 1 is a side view of the device embodying our invention. Fig. 2 is a top or plan view thereof. Fig. 3 is a view similar to Fig. 1, partly sectional. Fig. 4 is a rear view of a portion thereof.

Similar letters of reference indicate corresponding parts in the several figures.

Our invention consists in means for passing potatoes from a hopper to a discharge-spout. A tooth takes the potato from a conveyer at the bottom of a hopper, and said conveyer has combined with it a rising and falling overhanging door, a projecting arm, and a sliding plate, whereby the potatoes will not clog, and the discharge of more than the desired number is prevented.

Referring to the drawings, A represents a wheeled frame or truck, on which is mounted a hopper, B, having a vertical partition, C, which divides the hopper into two compartments, *a b*. D represents a discharge-spout, which communicates with the compartment *b*. Fitted to the bottom of the hopper B is a horizontally-arranged **V** or **U** shaped conveying-slide, E, which moves under the partition C, and covers and uncovers the top of the spout D. To the slide E is attached an arm, *c*, which is connected to a yoke, *d*, fitted on an eccentric, F, whose bearings are on the frame or truck A, and which receives power from the wheel of the frame or truck A. G represents a tooth or prong having an axial motion, and adapted to move in and out of the compartment *b* of the hopper. Motion is imparted to the tooth by means of the eccentric F, whose yoke *d* is connected to the lower end of the tooth. To the rear side of the inner face of the hopper B, at or about the bottom thereof, there is secured a **V**-shaped arm, H, which projects downwardly into the conveying-slide E, and on the front side thereof there is hinged a door, J, which hangs over the slide E. Rising from the rear end of the slide E is a plate, K, which, secured to the plate, moves in and out of the hopper through a slit or opening in the rear side thereof, and when it is in the hopper it occupies a position between the sides of the arm H. The slide E has secured to it, near its forward end, an upwardly-extending pin L, which, when the slide moves back, comes under the door J and elevates the same.

The operation is as follows: The truck will be pushed or pulled, the handles *e* being provided for that purpose. The rotation of the wheel of the truck will impart rotary motion to the eccentric F, whereby reciprocating motions will be imparted to the conveying-slide E and hook G. As the slide G moves to the rear the potatoes at the bottom of the hopper will be lifted by the door rising by the action of the pin L. This prevents crowding of the potatoes, and permits the lowermost potato to enter the slide E. The forwardly and downwardly projecting arm H serves to prevent clogging of the potatoes at the bottom of the hopper and crowding thereof on the slide E. The slide now moves forward and carries the potato thereon under the door J and partition C into the compartment *b*. The plate K advances with the slide and separates the potatoes above the arm H, and prevents crowding on the slide at the rear of the hopper, while the lowered door J prevents crowding on the slide at the forward part of the hopper. The potato, having reached the compartment *b*, is seized by the tooth G, which has entered said compartment by the action of the eccentric F, and is caused to pierce the potato. The slide now returns, and the tooth holding the potato rises. When the slide uncovers the top of the spout D the tooth moves out of the compartment through a slot in the front wall of the hopper, and the potato, stopping against the walls of said slot, is cleared of the tooth and falls into the spout D, by which it is di-

rected into the ground. Another potato now enters the conveyer-slide, and the operation, as above stated, is repeated, and continued until the work is completed.

It is evident that a number of conveyers and teeth may be employed in order to duplicate or multiply the number of potatoes to be dropped.

Having thus described our invention, what we claim as new, and desire to secure by Letters Patent, is—

1. The rising and falling door J, in combination with the conveying-slide E, substantially as and for the purpose set forth.

2. The projecting arm H, in combination with the conveying-slide E and door J, substantially as and for the purpose set forth.

3. The vertical plate K, in combination with the conveying-slide E, substantially as and for the purpose set forth.

4. The vertical plate K and projecting arm H, in combination with the conveying-slide E and door J, substantially as and for the purpose set forth.

5. The partitioned hopper B, rising and falling door J, and projecting arm H, in combination with the conveying-slide E, plate K, and tooth G, substantially as and for the purpose set forth.

GEO. H. ZANE.
SAMUEL A. KENNEDY.

Witnesses:
JOHN A. WIEDERSHEIM,
LEWIS F. BROUS.