Sept. 25, 1945. B. STROSNIDER 2,385,590

DOOR OR GATE CLOSER

Filed Sept. 1, 1944 2 Sheets-Sheet 1

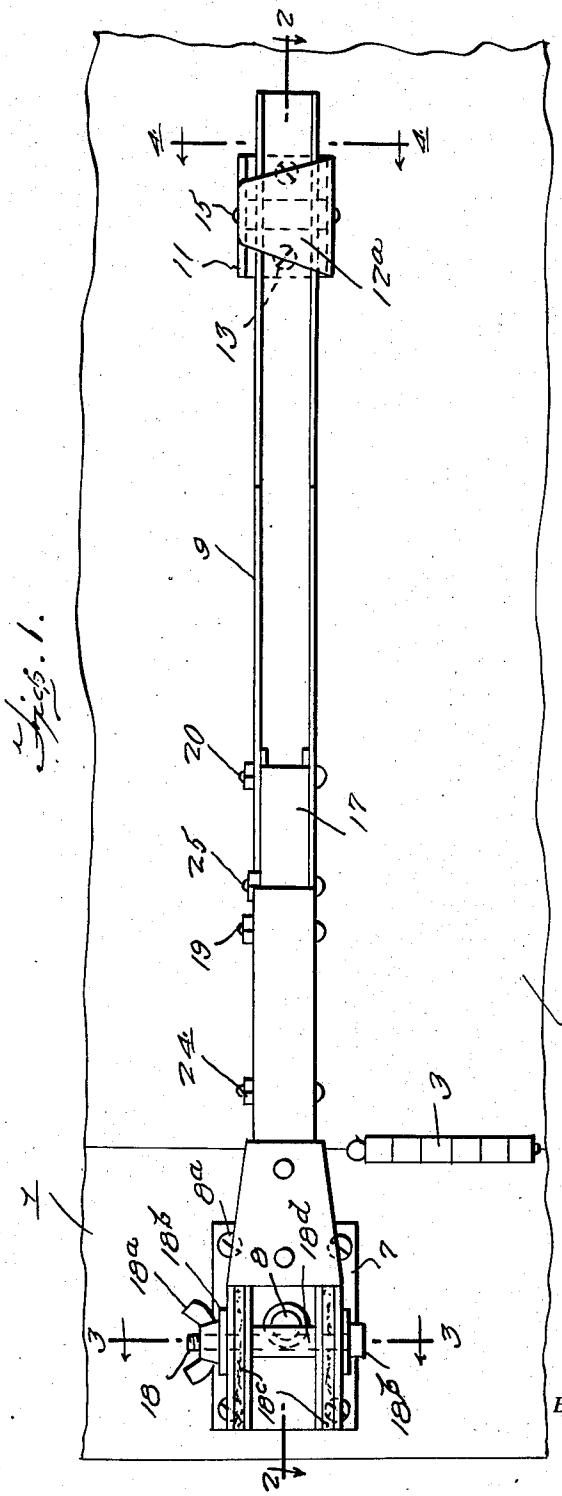

Fig. 1.

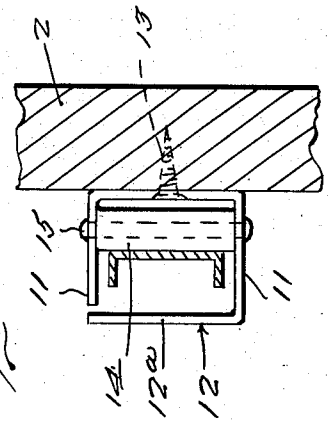

Fig. 4.

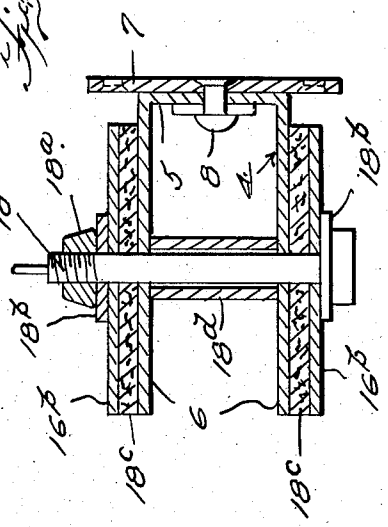

Fig. 3.

Inventor

Bush Strosnider

By Clarence O'Brien and Harvey R. Jacobson

Attorneys

Sept. 25, 1945. B. STROSNIDER 2,385,590

DOOR OR GATE CLOSER

Filed Sept. 1, 1944 2 Sheets-Sheet 2

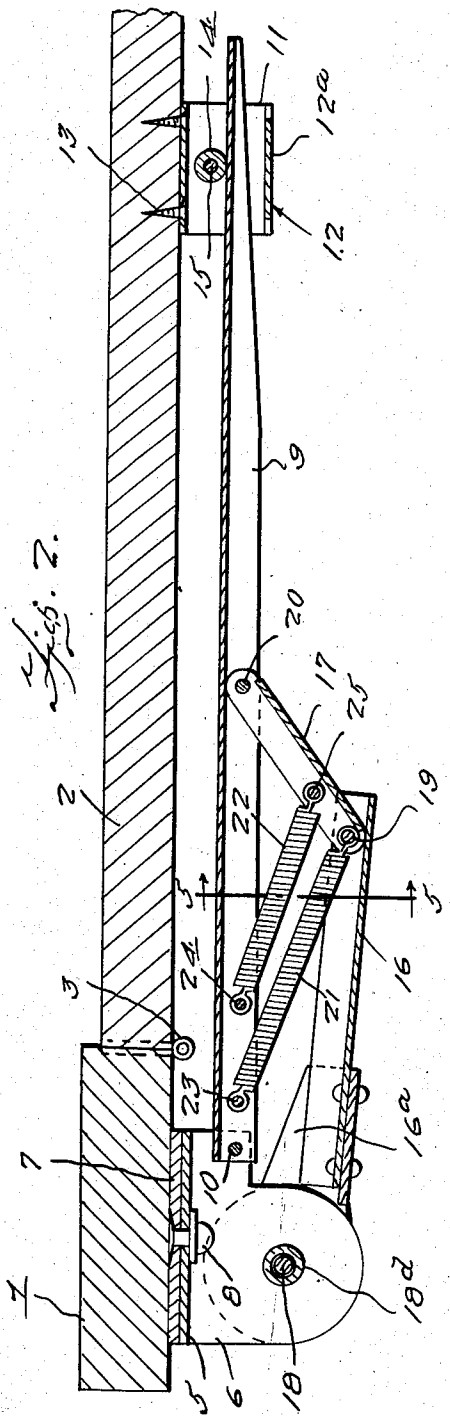

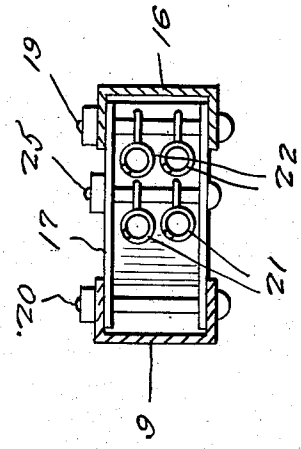

Inventor

Bush Strosnider

By Clarence O'Brien and Harvey B. Jacobson

Attorneys

Patented Sept. 25, 1945 2,385,590

UNITED STATES PATENT OFFICE

2,385,590

DOOR OR GATE CLOSER

Bush Strosnider, Ashland, Ky.

Application September 1, 1944, Serial No. 552,272

1 Claim. (Cl. 16—80)

My invention relates to door, or gate, closers of the type forming the subject matter of my U. S. Letters Patent No. 2,343,817, dated March 7, 1944, and over which the instant invention is designed as an improvement.

The primary object of the instant invention is to simplify the structure disclosed by said patent and reduce the cost of manufacture without impairing efficiency in operation.

Other and subordinate objects are also comprehended by my invention, all of which, together with the precise nature of my improvements, will be readily understood when the succeeding description and claims are read with reference to the drawings accompanying and forming part of this specification.

In said drawings:

Figure 1 is a view in front elevation illustrating my improved door, or gate, closer applied to a door,

Figure 2 is a view in longitudinal section taken on the line 2—2 of Figure 1,

Figure 3 is a view in vertical section taken on the line 3—3 of Figure 1 and drawn to an enlarged scale,

Figure 4 is a similar view taken on the line 4—4 of Figure 1, and

Figure 5 is a similar view taken on the line 5—5 of Figure 2 and drawn to an enlarged scale.

Referring to the drawings by numerals, my improved closer has been shown therein as applied to a wall 1 having a door 2 hinged thereto, as at 3.

According to my invention, a bracket 4 of U shape in cross section and embodying a back web 5 and right angled upper and lower edge flanges 6 on said web is attached to the wall 1 adjacent the hinged edge of the door 2 by means of a back plate 7 to which the web 5 is pivoted, as at 8, centrally of the plate and web, the back plate being fixed to the wall by screws as at 8a.

An elongated, channel-type, door-closing lever 9 fitting at one end between the flanges 6, channel side outermost, is pivoted at one end, as at 10, to said bracket at the side of the bracket nearest the door 2 and so as to swing about a vertical axis in opposite directions into door-opening and closing positions respectively. The other, or free, end portion of the lever 9 is slidably interposed between a pair of guide flanges 11 of a bracket 12, similar to the bracket 4, and which is similarly secured to the door 2 by screws, as at 13, at a suitable distance from the hinged edge of the door 2 for a purpose presently seen. The lever 9 is adapted to ride on and bear against an upright roller 14 suitably mounted in the bracket 12 by a pintle 15 extending through the flanges 11 of said bracket 12. The bracket 12 is provided with a front upright keeper wall 12a for preventing the free end of the lever 9 from being pulled out of said bracket. The lever 9 is yieldingly urged toward the door 2 and against the roller 14 by a pair of relatively long and short toggle levers 16, 17, both of channel form for reinforcing purposes. The long lever 16 includes a forked rear end extension 16a terminating in a pair of laterally spaced disks 16b straddling the flanges 6 of the bracket 5 and pivoted thereto by means of a bolt 18 extended through the disks 16b with a wing nut 18a on the upper end thereof. Suitable washers 18b are interposed between the disks 16b and the bolt head and the wing nut 18a respectively. A pair of annular friction brake disks 18c are interposed between the disks 16b and the flanges 6. A bushing 18d is provided on the bolt 18 between the disks 6. The short lever 17 is pivoted at one end, as at 19, in the other end of the long lever 16 and has its other end pivoted, as at 20, in the lever 9 substantially midway between the ends of the latter. A pair of vertically spaced coil springs 21 connects the joint of the toggle levers 16, 17, or, in other words, the pivot pin 19, to the lever 9 close to the pivot 10. A second pair of similarly spaced shorter coil springs 22 connect the lever 17 intermediate its ends to the lever 9 further from the pivot 10. Bolts 23, 24 connect the pairs of springs 21, 22 to the lever 9 and a bolt 25 connects the pair of springs 22 to the lever 17.

The operation of the described invention will be readily understood. The pairs of coil springs 21, 22 tend to straighten out the toggle levers 16, 17 and at the same time swing said levers and the pivot 10 in the proper direction to cause the lever 9 to swing into door-closing position while bearing against the roller 14 and thereby closing the door 2. The brake disks 18c serve to retard such swinging of the lever 9 and by tightening the wing nut 18a the braking action of the disks 18c may be increased. When the door 2 is opened the toggle levers 16 and 17 are swung into increasing angular relation whereby the pairs of springs 21, 22 are gradually stretched to impose increased tension against said levers up to a maximum whereby when the door is released it will be closed under the action of gradually decreasing force exerted against the same by said springs through the levers 17 and 16. By having the bracket 5 pivoted as by the pivot 8 the bracket and levers

may swing to compensate for sag in the door 2 or tilt thereof in opening and closing.

What I claim is:

A closing device for a hinged door comprising a bracket, means for securing said bracket to a fixed part at one side of the doorway, a roller, means for attaching the roller to the door, a door-closing lever pivoted at one end to said bracket to swing in opposite directions into door-closing and opening positions, respectively, and adapted to bear against said roller, and spring tensioned means for swinging said lever into door-closing position and causing the same to bear against said roller, comprising a pair of toggle levers one pivoted to said bracket and the other pivoted to said lever, and pairs of springs one pair connected to the door-closing lever adjacent the pivot of said lever and also connected to the joint of said toggle levers, and the other pair being connected to said door closing lever further from the pivot of the same and also connected to one of the toggle levers intermediate the ends of the latter.

BUSH STROSNIDER.