June 1, 1965 J. F. CRAWFORD 3,187,319

TIME INTERVAL INDICATOR HAVING A ROTATABLE TRANSPARENT PLATE CONCENTRIC WITH A FIXED CALIBRATED PLATE

Filed Sept. 4, 1962 2 Sheets-Sheet 1

Fig. 1

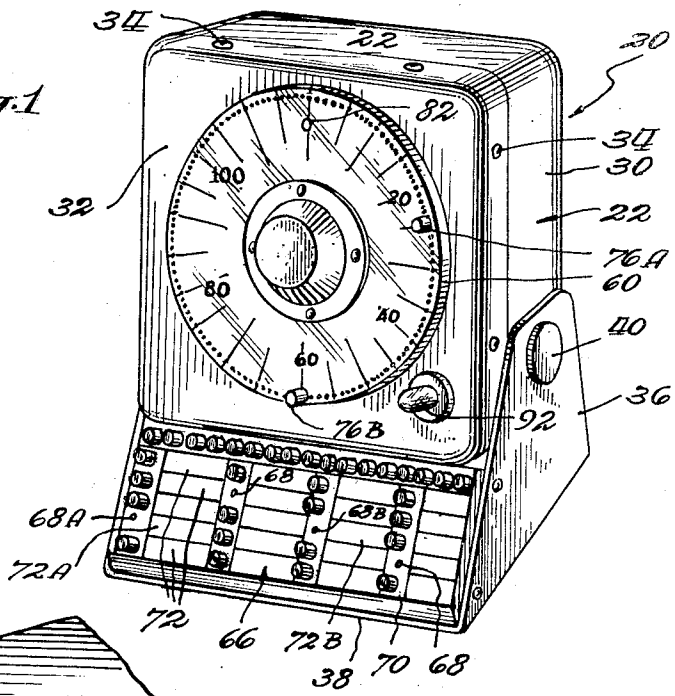

Fig. 2

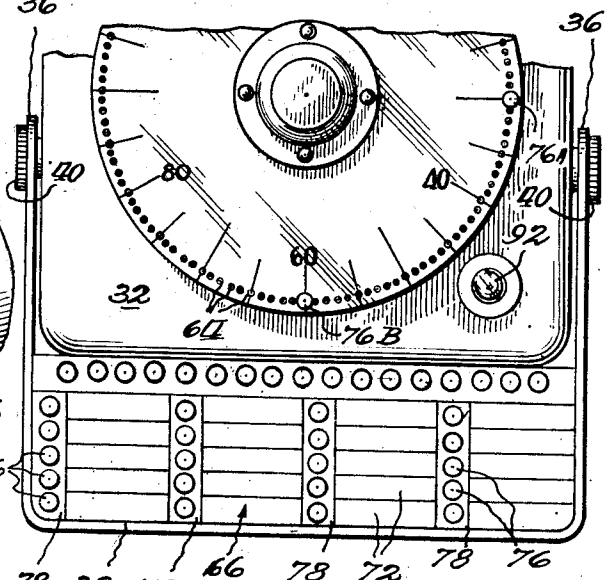

Fig. 3

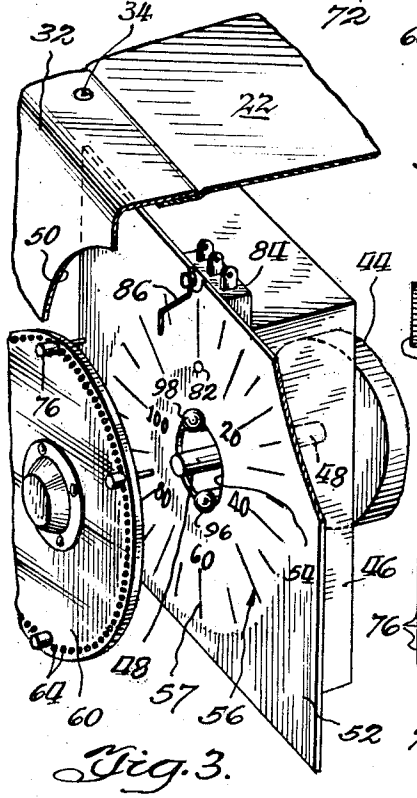

INVENTOR.

Jack F. Crawford

By Silverman, Mullin, Cass & Kaufman

Attorneys.

June 1, 1965 J. F. CRAWFORD 3,187,319

TIME INTERVAL INDICATOR HAVING A ROTATABLE TRANSPARENT PLATE CONCENTRIC WITH A FIXED CALIBRATED PLATE

Filed Sept. 4, 1962 2 Sheets-Sheet 2

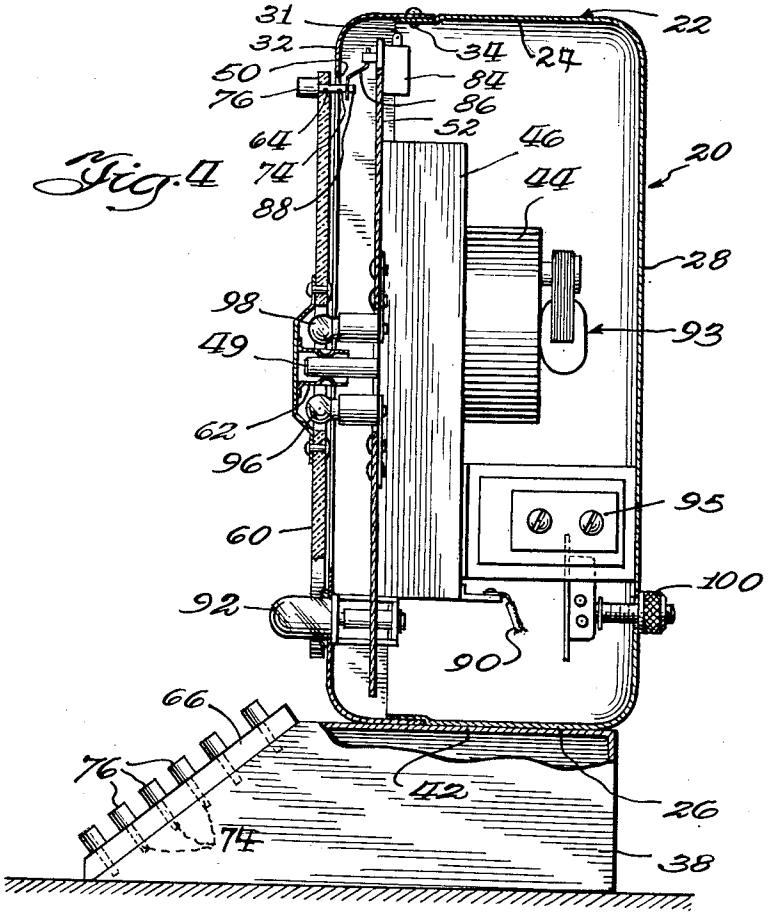

Fig. 4

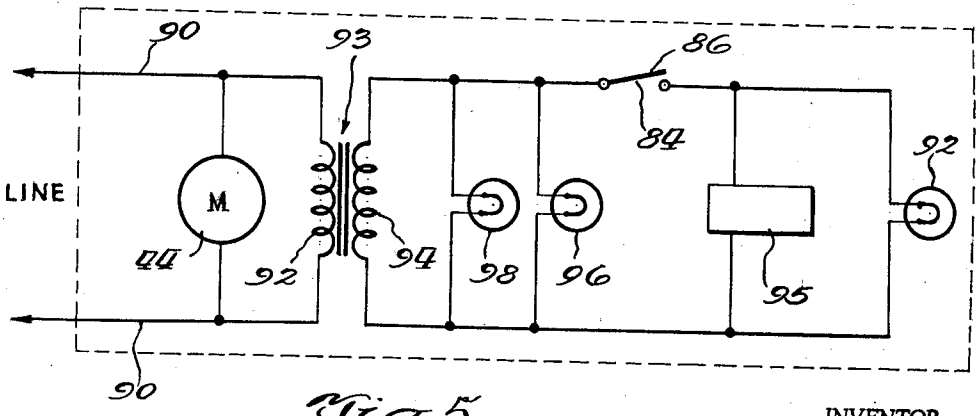

Fig. 5

INVENTOR.
Jack F. Crawford

By Silverman, Mullin, Cass & Yaufman
Attorneys.

United States Patent Office 3,187,319 Patented June 1, 1965

3,187,319

TIME INTERVAL INDICATOR HAVING A ROTATABLE TRANSPARENT PLATE CONCENTRIC WITH A FIXED CALIBRATED PLATE

Jack F. Crawford, South Miami, Fla., assignor to Coulter Electronics, Inc., Hialeah, Fla., a corporation of Illinois

Filed Sept. 4, 1962, Ser. No. 221,045
1 Claim. (Cl. 340—309.1)

This invention relates generally to timing devices and more particularly, to a novel timing device especially adapted for sequentially signalling elapse of predetermined time periods for tests or parts thereof which are being conducted either by the same or different persons.

Although not necessarily limited thereto, the invention is especially suitable for use in laboratories, such as an industrial testing laboratory where a plurality of tests or operations may be conducted concurrently. Heretofore, the practice has been to provide each technician with a timing device in order that he may time control the time dependent tests or operations conducted by him. Obviously, this practice necessitates stocking many timing devices at considerable additional cost. Other problems and disadvantages arise because of the necessity for using many timing devices in a laboratory. Considering the circumstance where a technician may be required to leave the vicinity of where he is conducting a test or operation, some means are required to signal the elapse of the predetermined time of the test or a specific stage of the test he is conducting. Where a plurality of tests are in progress simultaneously in the laboratory, each controlled by a different timing device, it becomes exceedingly difficult for a technician, subject to many alarms or other signals given at the same time or in rapid sequence to distinguish which is applicable to him. Where a single test is to be run by a technician which involves a series of steps or phases which are to be conducted consecutively, each of which is to be time controlled and its completion signaled so that the next succeeding phase is commenced, a plurality of timing devices would have to be employed. If one timing device is used, individual time sequences must be set into the device serially, that is, after each step or phase of the test is completed, the device will have to be reset. Previously available timing devices generally were of stop-watch character so that when the time period set into it elapsed, it ceased to operate. Thus, there was no way of knowing how far past the time test period the test ran when the operator first was alerted.

Consequently, it is desirable to have a single timing device which can be used concurrently by many technicians in a laboratory to alert each of them individually as to when a preset time has elapsed, as required or for a single operator conducting a plurality of tests concurrently.

Accordingly, it is a major object of the invention to provide a timing device of the character described which is capable of performing the aforesaid functions successfully and which eliminates the need for resorting to individual timing devices for each technician.

It is a major object of this invention to provide a timing device of the character described that can be preset to measure a time period of a plurality of different operations started at staggered times and which will signal and identify for an operator when the preset completion time of each particular operation has been reached.

It is an object of this invention to provide a timing device as described having a continuous, simple, accurate timing means into which may be set completion times for different tests or parts thereof commencing at different times and which can sequentially signal the end of the time duration of each of said particular tests.

It is an object of this invention to provide a timing device that can be preset for timing a given operation without interfering with other settings already thereon.

It is another object of this invention to provide a timing device of the character described having simple yet effective means for the selection and identification of the specific operation being timed with the signalling of the elapsed preset time for said operation.

It is another object of this invention to provide a timing device of the character described that permits the rapid selection of a timing cycle to time a given operation and to simply and easily withdraw the time selection once the operation is completed.

The foregoing and other objects of the invention will become apparent from the disclosure which follows in which a preferred embodiment of the invention is described in detail in the specification and illustrated in the accompanying drawings. It is contemplated that minor changes in the arrangement, construction, size and proportions of the several parts thereof may occur to the skilled artisan without departing from the scope or sacrificing any of the advantages thereof.

In the drawings:

FIG. 1 is a front perspective view of the timing device embodying the invention.

FIG. 2 is a fragmentary front elevational view showing the lower portions of the said device.

FIG. 3 is a fragmentary perspective view, partially exploded and in section showing structural details of said device.

FIG. 4 is a side elevational view of said device with portions thereof illustrated in section to show structural details.

FIG. 5 is a diagrammatical view of the electrical circuitry of said device.

Generally, the electrical timing device embodying the invention employs a conventional clock motor which drives a rotating plate referred to as a rotary timing plate. This timing plate is mounted coaxially with and superimposed over a dial face bearing a chronometer scale the calibrations of which are visible on the face of the timing device. The timing device may operate continuously, that is to say, it is not necessary to start the timing plate rotating in order to initiate a timing cycle. Along the perimetric edge of the rotating timing plate are provided spaced apart sockets or holes for selectively inserting therein pin-like members to actuate a switch or perhaps another type of control at the end of a preset timing cycle so as to alert an operator or operators by predetermined signals. Said control or switch may be located anywhere on the fixed timing plate; this position then becoming the zero position or the terminal position for a selected timing cycle. To set a timing cycle into the device, the operator takes one of the pins from a storage rack or panel, provided on the device, and inserts it into one of said holes in the rotatable timing plate at a position which is removed in time from the terminal position corresponding to the length of time the cycle is to run. A corresponding space is provided in the rack or panel for correlating a particular cycle with a certain pin. As the pin passes this terminal point, it will actuate the control switch to produce a signal which alerts the operator to the fact that the interval of time he has set into the device has elapsed.

Referring now to the drawings, the timing device embodying the invention is identified generally by the reference character **20**. Said device includes an instrument case of generally rectangular configuration which may be formed of plastic, metal or other suitable material. The instrument case includes a box-like receptacle **22** having a top wall **24**, a bottom wall **26**, a rear wall **28** and opposite side walls **30** with the front open end **31** of said

receptacle 22 being closed off by a dish-shaped cover member 32 secured thereto by means of suitable screw fasteners 34. The cover member 32 forms the front face of the instrument case. The instrument case is supported upright between a pair of parallel plates 36 upstanding along opposite lateral edges of a base or platform 38 and thumb screws 40 are threaded through said plates 36 into side walls 30 to hold the case in place on the base 38. As seen in FIG. 4, the instrument case is engaged upon the elevated upper wall 42 of said platform spaced above the bottom end of the platform.

Supported in the interior of the receptacle 22 inwardly of the front open end 31 is a clock type motor 44 mounted in a suitable frame 46. The drive shaft 48 of said motor has a free end portion 49 extending forwardly and outwardly through said open end 31 and a circular window 50 in the cover or front face 32 of the instrument case. Supported on frame 46 behind the window 50 is a dial face 52 having a central opening 54 aligned with window 50 through which the shaft 48 extends. On the dial face or plate 52 is a chronometer scale designated 56, the calibration markings 57 of which are imprinted, etched or otherwise formed and arranged in a circle corresponding to fractional or minute intervals of one hour or two hours, for example, as desired.

Keyed or otherwise secured to said end portion 49 of the drive shaft is a rotary timing plate 60. In the embodiment shown, the plate 60 is formed of a transparent material such as glass or plastic and mounts a central hub 62 which can be fitted on the extremity of portion 49, best seen in FIG. 4, so that plate 60 will rotate with shaft 48 at the same angular speed. Along the perimetric edge of the plate 60 and inwardly spaced therefrom is a circular array of equally spaced apart sockets or openings 64 extending entirely through the plate. Also, the sockets 64 are arranged to register with calibration markings 57 of chronometer scale 56. The angular speed of the shaft 48 is easily established or controlled by suitable gearing, for instance, well known in the art.

Mounted on the front surface of the base 38 is a storage and record panel 66, the panel 66 being canted forwardly and downwardly from the wall 42 of the base. The panel 66 has a series of sockets 68 arranged in a plurality of parallel, spaced apart rows in the face of panel 66. To one side of and opposite each socket 68 is a rectangular record space 72 in which information can be placed. In each of the sockets 68 is a peg 74 having a coded head 76. The coding of the pegs 74 may be achieved by distinctive coloring, for instance, which is matched with a color for the area 78 in panel 66 in which a socket 68 is located, as shown in FIG. 2. Consequently, a socket 68 in a particular area 78 on the panel 66 can be related to a peg head 76 and the pegs 74 therefore, can be used to designate specific tests or parts thereof. Further, the space 72 to one side of each socket 68 can be used to write in or otherwise apply written identification of a specific test or operation.

The coded pegs 74 are adapted to be selectively placed into the openings 64 in the rotary timing plate 60. Referring to FIG. 1, marker 82 on the dial face 52 is designated a zero or terminal position which for convenience, may be located at the 12 o'clock position of the chronometer scale 56. Means are provided capable of being actuated by a peg 74 when it reaches said terminal position 82 which will provide a signal calculated to alert an operator that a predetermined test period of time has elapsed. Said means include a switch 84 carried on the dial plate 52 having a movable switch or contact arm 86 capable of intersecting the path of movement of a peg 74 seated in a socket 64. The switch 84 preferably is a micro-switch which is responsive to small increments of movement of the switch arm 86. Referring to FIG. 4, it will be seen that the peg 74 has a shank end 88 which protrudes outwardly from the rear face of the rotary plate 60 a sufficient distance to actuate the switch arm 86 when moving past the same. As will be explained, the switch 84 is biased normally to an open condition.

Referring to FIGS. 4 and 5 concurrently, motor 44 is connected across the line leads 90 which connect to a conventional A.C. electrical current source, such as wall receptacle. A male plug (not shown) on device 20 will suffice for this. Leads 90 are connected across the opposite ends of the primary winding 92 of a conventional step-down transformer 93 and the switch 84 is connected in series with the secondary winding 94 of said transformer. Connected in series with said switch 84 and secondary 94 is a signal lamp 92 and connected in parallel relationship with the secondary winding 94 is the sound generator or the buzzer 95 and independent dial lights 96 and 98. The lights 96 and 98 are connected between the secondary 94 and switch 84 so that they are energized at all times the motor 44 is operative. The switch 84 is interposed in the secondary winding circuit between the secondary and said elements 92 and 95 so as to control their operation in the device 20. A volume control 100 for the buzzer 92 is provided on the rear wall 28. It will be appreciated that the precise manner of mounting the electrical components in the instrument case is conventional and therefore, will not be described in further detail.

For purposes of explaining the operation of device 20, it will be assumed that motor 44 has a two-hour movement shaft 48 so that the scale 56 is calibrated for 120 minute increments. Likewise, the rotary plate 60 has 120 openings or sockets 64 around the perimetric edge thereof which likewise conform to the 120 minute calibration scale. Normally, the motor 44 is operating and switch 84 is open so that the sound generator 95 and signal lamp 92 are rendered inoperative. It is presumed that an operator intends to run two operations or tests of a single test composed of two parts to be run for different intervals of time, one of which is a twenty-five minute run and the other is a sixty minute run. Under the facts presumed, the timing plate 60 will complete one revolution, from marker 82, every two hours or 120 minutes, rotating in a counterclockwise direction, for instance, as the device 20 is illustrated in FIG. 1.

The operator removes one peg 74A from socket 68A and inserts that peg in the opening 64 aligned with the twenty-five minute calibration mark of the chronometer scale 56. He then removes another peg 74B from socket 68B and inserts that peg in an opening 64 aligned with the 60 minute calibration of scale 56. The coded pegheads 76A and 76B respectively installed in the proper openings in the plate 60 are shown in FIG. 1. In space 72A, the operator can write sufficient information to identify the portion of the test represented by peghead 76A and the same can be done in space 72B as to peghead 76B. It should be appreciated that more than two tests or parts thereof can be timed concurrently.

With the timing plate 60 rotating, after the elapse of the first twenty-five minutes, the protruding shank end 88 of peg 74A will intersect the switch arm 86 and close switch 84 momentarily and thereby energizing the buzzer 95 and the signal lamp 92 to alert the operator that this test run has been completed. Upon hearing the buzzer or seeing the lamp 92 lit, the operator can glance at the dial face of the device 20 and see immediately from the coded or colored head 76A that his particular test or portion thereof has been completed. The plate 60 continues to rotate so as to carry the peg 74A past the switch arm 86 at which time, it will be biased to an open position to de-energize buzzer 95 and lamp 92. When the sixty minute time interval has elapsed, the same signalling occurs when peg 74B trips switch arm 86.

It will be appreciated that the peghead 76A may remain on the plate 60 for completion of the sixty minute cycle. In any event, the operator also can be apprised by the position of the peghead 76A relative the starting point 82 how much time more than twenty-five minutes

has elapsed, in the event he was not alerted at the time the peghead **76A** is aligned with start marker **82**.

It will be apparent that a coded peg can be inserted in plate **60** at any time because plate **60** is rotating continuously. Thus, a plurality of technicians can use the same device **20**, starting their time controlled operations sequentially or at staggered time.

It is believed that this invention, its mode of construction and assembly, and many of its advantages should be readily understood from the foregoing without further description. The invention has been particularly pointed out in the appended claim in language intended to be literally construed commensurate with the progress contributed by the invention.

What it is desired to be secured by Letters Patent of the United States is:

A timing device for signalling elapse of a plurality of predetermined time periods sequentially comprising, an instrument case including, an electrical motor having a drive shaft, a first plate having a chronometer scale on the face thereof, a second plate mounted for rotation with said shaft in a position overlying said first plate and having said scale visible therethrough, said rotary plate having a circular array of individual sockets in registry with the calibrations of said scale, an electrical signal circuit including switch means and signal means connected to be energized upon actuation of said switch means, and electrical circuit means for connecting said motor and signal circuit to a source of electrical current for rotating said rotary plate continuously and independently of said signal circuit, said switch means being normally

biased to a position rendering said signal means inoperative, and switch actuating means removably carried by said rotary plate in selected ones of said sockets for sequentially operating said switch means to render said signal means operative to signal elapse of each of said time periods in accurate sequence, said device having a storage base for supporting said instrument case thereon vertically oriented on a horizontal surface and including, an elevated wall having a pair of parallel plates spaced apart and upstanding along opposite lateral edges of said wall, said case being removably secured between said parallel plates upon said elevated wall, said base having a canted storage panel wall for said switch actuating means extending forwardly and downwardly from said elevated wall on the same side of the device as said rotary plate and separate from said first plate.

References Cited by the Examiner

UNITED STATES PATENTS

1,371,935	3/21	Rubin	200—38
2,533,877	12/50	Chikan	340—365
2,642,490	6/53	Capehart et al.	340—326 X

FOREIGN PATENTS

612,294	4/35	Germany.
938,325	1/56	Germany.
1,199,539	12/50	France.

NEIL C. READ, *Primary Examiner.*

ROBERT H. ROSE, *Examiner.*