(No Model.)

C. REBSTOCK.

DOOR KNOB.

No. 273,893. Patented Mar. 13, 1883.

Fig. 1.

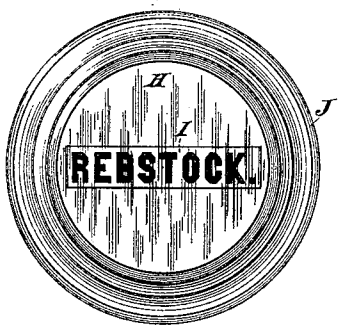

Fig. 2.

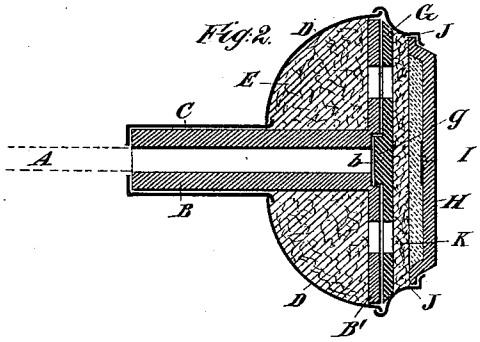

Fig. 4.

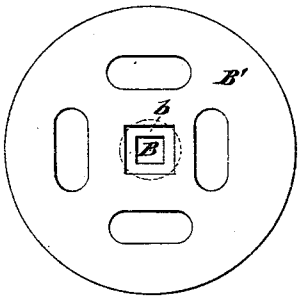

Fig. 3.

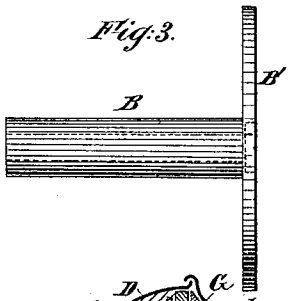

Fig. 5.

Fig. 6.

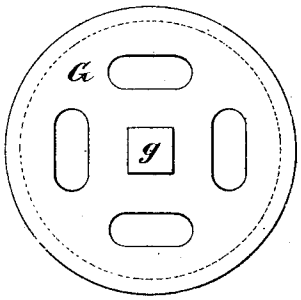

Fig. 7.

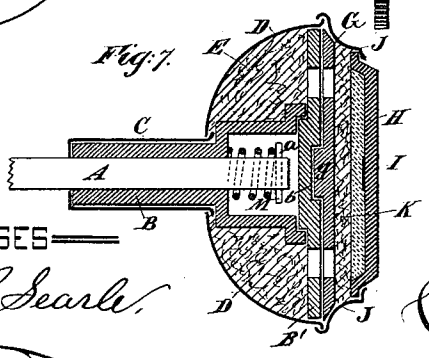

WITNESSES

Charles R. Searle

M. D. Gourtner

INVENTOR

Christian Rebstock

by his attorney

F. A. Seton

N. PETERS. Photo-Lithographer, Washington, D. C.

UNITED STATES PATENT OFFICE.

CHRISTIAN REBSTOCK, OF BRIDGEPORT, ASSIGNOR TO HIMSELF, AND CHARLES DIETTERLIN, OF NEW HAVEN, CONNECTICUT.

DOOR-KNOB.

SPECIFICATION forming part of Letters Patent No. 273,893, dated March 13, 1883.

Application filed July 22, 1882. (No model.)

To all whom it may concern:

Be it known that I, CHRISTIAN REBSTOCK, of Bridgeport, in the county of Fairfield and State of Connecticut, have invented certain new and useful Improvements relating to Door-Knobs, of which the following is a specification.

I make a highly-decorative knob at small cost. It has a transparent front with a metallic back and a strong metallic frame with suitable filling. Within the front, which is of glass or other transparent material, I place any desired decorative device or material. I give the preference to distinctly-printed matter, either a word, letter, or picture.

The following is a description of what I consider the best means of carrying out the invention.

The accompanying drawings form a part of this specification.

Figure 1 is a face view. Figs. 2, 3, &c., show a construction involving a portion of the invention. Fig. 2 is a central longitudinal section. Fig. 3 is a side elevation of the shank and the broad plate or flange formed thereon. Fig. 4 is a face view of the same. Fig. 5 is a side view of the separate front plate. Fig. 6 is a view of the back face thereof. Fig. 7 is a longitudinal section, showing the invention fully carried out.

Similar letters of reference indicate corresponding parts in all the figures.

Referring to Figs. 1 to 6, A (shown in dotted lines in Fig. 2) is the shank or spindle, the usual square rod of iron or steel extending loosely through the door and adapted to be turned to operate the catch by ordinary connections, (not shown) being provided with a knob at each end by which it may be turned.

B B′ is the shank and main skeleton frame, of malleable cast-iron or other suitable material. The part B fits upon the square spindle A. The part B′ is a broad and strong flange, provided with liberal openings through which a filling composition, E, may be introduced at the proper stage of the manufacture. The outer face of the casting B B′ has a square recess, *b*.

C is a tubular casing, of brass, German silver, or other suitable material, flanged inwardly at one end and outwardly at the other.

D is a semi-spheroidal casing, of brass or other suitable material, matching closely to the outwardly-flanged end of C. The opposite and larger edge of this casing D is flanged outwardly, and applies close to the periphery of the stout flange or skeleton B′. These parts are applied properly together and a firm filling of plaster or other suitable material is introduced through the holes in the skeleton flange B′.

G is what I term a "front skeleton plate." It extends over the whole or a great portion of the face of B′, and is formed with a square projection, *g*, which, matching in the recess *b*, locks the parts against turning one upon the other. There are liberal openings in the thin casting or front skeleton, G.

H is a face-piece of clear glass, having a hollowed back and a beveled and flanged periphery, as shown.

I is a slip of paper or brilliant metallic foil, on which has been previously produced, by printing or otherwise, any decorative or distinctive device. I have shown on Fig. 1 the word "Rebstock." Whatever the device desired, it is produced as clearly and sharply as practicable on the front face of the slip I. The slip I is reliably held in contact with the glass H by plaster or other suitable filling applied in the hollow back of the face H.

J is a nicely-finished rim, of brass or other suitable material, spun, stamped, or otherwise brought to the form shown. The parts G H I J are held in position and a filling, K, introduced through the apertures in G and allowed to harden. When the two portions thus separately completed are applied properly together the rim J is spun over or otherwise nicely and strongly engaged with the flanged-out edge of the back case, D. In this condition the rim J connects the flanged edge of the face-piece H with the flanged edge of the back case, D. It connects the entire front parts with the entire back parts of the knob and makes the whole a unit—a strongly and permanently united knob and shank. This may be fastened on the spindle A by ordinary means, (not represented)—as, for example, a short screw with a countersunk head inserted through the tubular casing C and shank B into a threaded hole in the spindle A.

In Fig. 7, which shows the complete form of the invention, the front skeleton plate, G *g*, and the parts H I J and filling K are identical in form and construction with the corresponding parts above described, and the attaching of these important front parts to the back and main parts of the knob is effected by spinning inward the back edge of the part J the same as above described; but here the shank B is enlarged and chambered at the front end to accommodate a spiral spring, M, encircling the spindle, and a transverse pin, *a*, inserted through the latter. The flange or main skeleton B′ is in this most complete form made separate from the shank B and locked therewith by a square projection or tenon on the skeleton B′, engaging in a corresponding square socket in the front of the shank B. There are thus two engagements of the parts together by square tenon and socket—the first that of the skeleton B′, with the parts in rear thereof, and the second that of the front skeleton plate, G, with the parts in rear thereof.

In each pair of knobs one is formed as in Fig. 7, and is permanently connected to the spindle A before the knob is completed. The other is formed as in Fig. 2, and is connected after the spindle is inserted through the door. The spring M, abutting against the cross-pin *a* and against the bottom of the cavity in the shank, draws the knobs strongly together and takes up all the looseness or lost motion and avoids rattling.

Modifications may be made in the forms and proportions. Parts of the invention may be used without the whole. I can dispense with the spring M and transverse pin *a*, and connect both knobs to the spindle by ordinary means. In such case both knobs may be constructed as in Fig. 2; or I can produce both knobs as shown in Fig. 7, except that the spring M and pin *a* are omitted from one, and that knob is caused to receive the end of the shaft and to confine it by a screw. The metallic surfaces, as also the glass, may be plain or decorated. Various subdued or brilliant effects may be produced by varying the size and form of the shielded piece of foil or paper I. Instead of white glass, transparent material of other colors may be used for the front plate, H. I esteem it important to the proper effect that the face be polished or finished to present a perfect surface. One modification to which I attach some importance is to make the knob as in Fig. 7, but with the flange B′ in one piece with the shank B. It is not essential to the successful use of the spring M and cross-pin *a*, or their equivalents, that the flange B′ shall be separate; but for general use I prefer to make the parts as shown.

I claim as my invention—

The front skeleton, G, transparent front plate, H, shielded device I, and rim J, in combination with each other and with the main skeleton B′, shank B, casings C and D, and with the spindle A, spring M, and abutting-pin *a*, all arranged for joint operation, as herein specified.

In testimony whereof I have hereunto set my hand, at Bridgeport, Connecticut, this 12th day of July, 1882, in the presence of two subscribing witnesses.

CHRISTIAN REBSTOCK.

Witnesses:

SAM. B. SUMNER,

ERNEST L. STAPLES.