T 5498 AUS

668923

SPRUSON & FERGUSON

AUSTRALIA

PATENTS ACT 1990

NOTICE OF ENTITLEMENT

I, Albertus Wilhelmus Joannes ZEESTRATEN, of Carel van Bylandtlaan 30, 2596 HR The Hague, the Netherlands, being authorised by the Applicant/ Nominated Person in respect of Application No. 37508/93 state the following:-

The Applicant/Nominated Person has entitlement from the actual inventor(s) as follows:-

The Applicant/Nominated Person is the assignee of the actual inventor(s).

The Applicant/Nominated Person is the applicant of the basic application(s) listed on the Patent Request.

The basic application(s) listed on the Patent Request is/are the application(s) first made in a Convention Country in respect of the invention.

DATED this first day of September, 1994

.....

Albertus Wilhelmus Joannes ZEESTRATEN

AUS

AU9337508

(12) PATENT ABRIDGMENT (11) Document No. AU-B-37508/93
(19) AUSTRALIAN PATENT OFFICE (10) Acceptance No. 668923

(54) Title
AUTOMATIC REFUELLING SYSTEM

International Patent Classification(s)
(51)[5] **B67D 005/08**

(21) Application No. : **37508/93** (22) Application Date : **17.03.93**

(87) PCT Publication Number : **WO93/19004**

(30) Priority Data

(31) Number	(32) Date	(33) Country
92200800	**19.03.92**	**EP EUROPEAN PATENT OFFICE (EPO)**

(43) Publication Date : **21.10.93**

(44) Publication Date of Accepted Application : **23.05.96**

(71) Applicant(s)
SHELL INTERNATIONALE RESEARCH MAATSCHAPPIJ B.V.

(72) Inventor(s)
SICCO DWARS; CASPAR VERHAAGEN; CORNELIS VAN OUWERKERK

(74) Attorney or Agent
SPRUSON & FERGUSON , GPO Box 3898, SYDNEY NSW 2001

(56) Prior Art Documents
AU 36479/93 B67D 5/08 5/14
AU 643063 82789/91 H04L 9/00 H04B 5/00 B67D 5/33 5/08
EP 418744

(57) Claim

1. A system for control of automatic refuelling an automotive vehicle parked alongside a fuel dispenser unit, which system comprises

(a) communication means which communication means include means for operating the communication means arranged in the automotive vehicle and an electromagnetic wave transmitter/receiver arranged on the automotive vehicle, and an electronic circuitry which is connected to the electromagnetic wave transmitter/receiver, which electronic circuitry holds data including fuel pipe and fuel cap position data; and

(b) at the fuel dispenser unit, a processing unit, an electromagnetic wave transmitter/receiver connected to the processing unit, operating control units connected to the processing unit for controlling fuel supply operating units and for vehicle position determination, fill pipe and fuel cap position determination, and a couple of electromagnetic wave receivers connected to the operating control unit for the vehicle position determination,

wherein when the communication means is activated the electromagnetic waves emitted by the electromagnetic wave

.../2

transmitter/receiver on the automotive vehicle are received by both the electromagnetic wave transmitter/receiver and the couple of electromagnetic wave receivers of the fuel dispenser unit.

OPI DATE 21/10/93 APPLN. ID 37508/93
AOJP DATE 23/12/93 PCT NUMBER PCT/EP93/00681

AU9337508

I.

(51) International Patent Classification 5 :
B67D 5/08

A1

(11) International Publication Number: WO 93/19004

(43) International Publication Date: 30 September 1993 (30.09.93)

(21) International Application Number: PCT/EP93/00681

(22) International Filing Date: 17 March 1993 (17.03.93)

(30) Priority data:
92200800.8 19 March 1992 (19.03.92) EP
(34) Countries for which the regional or international application was filed: AT et al.

(71) Applicant *(for CA only):* SHELL CANADA LIMITED [CA/CA]; 400 4th Avenue S.W., Calgary, Alberta T2P 2H5 (CA).

(71) Applicant *(for all designated States except CA):* SHELL INTERNATIONALE RESEARCH MAATSCHAPPIJ B.V. [NL/NL]; Carel van Bylandtlaan 30, NL-2596 HR The Hague (NL).

(72) Inventors: DWARS, Sicco ; VERHAAGEN, Caspar ; VAN OUWERKERK, Cornelis ; Badhuisweg 3, NL-1031 CM Amsterdam (NL).

(81) Designated States: AU, BR, CA, JP, NZ, European patent (AT, BE, CH, DE, DK, ES, FR, GB, GR, IE, IT, LU, MC, NL, PT, SE).

Published
With international search report.

668923

(54) Title: AUTOMATIC REFUELLING SYSTEM

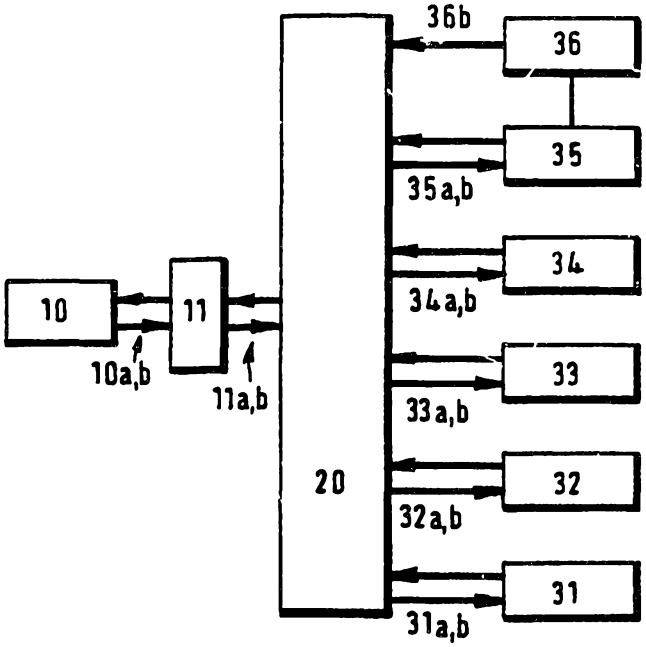

(57) Abstract

A system for control of automatic refuelling automotive vehicles parked alongside a fuel dispenser unit comprises a communication means (10), for starting, monitoring and finishing a refuelling procedure, operating control units (31, 32, 33, 34, 35, 36) for controlling a number of operating functions involved within said refuelling procedure and to be carried out by respective operating units; and a central processing unit (20) for processing and communicating data signals, the data signals processed being conducted to said operating control units. Said communication means is arranged within the vehicle to be refuelled. During said refuelling procedure, it is operated by the customer for transmitting data signals concerning the vehicle and the customer.

AUTOMATIC REFUELLING SYSTEM

The present invention relates to a system for control of automatic refuelling automotive vehicles.

European patent application publication No. 418 744 discloses a system for control of automatic refuelling an automotive vehicle, which system comprises a service panel for receiving data relating to the automotive vehicle to be refuelled, a fuel dispenser unit, a parking place located between the service panel and the fuel dispenser unit, and an induction loop arranged in the parking place to detect the presence of an automotive vehicle, which system further includes a device for coarsely determining the position of the automotive vehicle, means for moving the fill pistol, a near field sensor located near the fill pistol and adapted to co-operate with a signalling device located near the fill opening of the automotive vehicle, and a processing unit for operating the system.

Although in the above document an advanced automatic refuelling system is presented in that the driver or customer yet maintains full control as to the fuelling procedure, some shortcomings remain. Always panel handling, including the supply of a credit card, outside the vehicle is required. In view of the customer's or client's convenience as to safety, possible physical handicap, and state of the weather, the way of operating shown is less desirable.

Besides the safety aspects mentioned a further aspect has to be noticed. Although automatic refuelling simplifies the customer's efforts and his direct involvement and interference with respect to the refuelling procedure, simultaneously said automation substantially reduces the customers power to correct and to interrupt the procedure.

Furthermore, separate station units, arranged for operating the above said console-table and housing filling devices, making up the refuelling station as a whole, are necessary.

AUSTRALIAN PATENT OFFICE

As a further consequence several data providing and data communications links are employed, hereby complicating signal communication processing. Accordingly separate driver actions and respective detection operations need to be connected to unified data signals for being processed by the processing unit. Thus, separate signal pick up and signal link interruptions are possible failure sources.

It is therefore an object of the invention to obtain a fully integrated system for control of automatic refuelling automotive vehicles in that simultaneously full control on the refuelling procedure from inside the vehicle is maintained.

It is a further object of the invention to obtain a system wherein the way of operating, i.e. the way of starting, monitoring, and finishing a refuelling procedure, is simplified substantially.

It is yet a further object of the invention to obtain a system for automatic refuelling automotive vehicles wherein the active client's interaction can be reduced to a "single push on button" operation.

It is another object of the invention to obtain such a system wherein the number of communication links is reduced substantially.

To this end the system for control of automatic refuelling an automotive vehicle parked alongside a fuel dispenser unit according to the present invention comprises

(a) communication means which communication means include means for operating the communication means arranged in the automotive vehicle and an electromagnetic wave transmitter/receiver arranged on the automotive vehicle, and an electronic circuitry which is connected to the electromagnetic wave transmitter/receiver, which electronic circuitry holds data including fuel pipe and fuel cap position data; and

(b) at the fuel dispenser unit, a processing unit, an electromagnetic wave transmitter/receiver connected to the processing unit, operating control units connected to the processing unit for controlling fuel supply operating units and for vehicle position determination, fill pipe and fuel cap position

AUSTRALIAN PATENT OFFICE

determination, and a couple of electromagnetic wave receivers connected to the operating control unit for the vehicle position determination,

wherein when the communication means is activated the electromagnetic waves emitted by the electromagnetic wave transmitter/receiver on the automotive vehicle are received by both the electromagnetic wave transmitter/receiver and the couple of electromagnetic wave receivers of the fuel dispenser unit.

The fuel pipe and fuel cap position data comprise data on the position of the fuel pipe and the fuel cap relative to the electromagnetic wave transmitter/receiver on the automotive vehicle.

In a further embodiment of the invention said communication means is operated continuously thereby enabling advantageously unexpected situations, for example as to the customer's health, being monitored closely.

Advantageously said communication means is communicating refuelling procedure data, for example as to the amount of fuel to be supplied, or the money equivalent for which fuel is desired.

In accordance with the invention the means for operating the communication means is a vehicle control means. In a further embodiment of the invention the vehicle control means comprise at least one pedal operated for starting, respectively finishing, said refuelling procedure by pressing, respectively releasing, said pedal, or at least one key of an in-car terminal. Furthermore combinations of the above operating devices are comprised in the present invention.

Electromagnetic wave transmitter/receiver means arranged on the automotive vehicle and on said fuel dispenser unit are comprised. More in particular the transmitter/receiver means at the vehicle side are comprised in a rear light unit. In particular transmitters and receivers for infra-red light waves are employed.

In accordance with the invention the above data comprise first and second data signals concerning respectively fuel fill pipe data, cap position data, fuel type data, and cap lock data, and customer identification data and customer bank account data.

AUSTRALIAN PATENT OFFICE

The present invention will now be described by way of example in more detail by reference to the accompanying drawings wherein,

Figure 1 shows a block scheme of the system of the present invention only presented in most generalised form,

Figure 2 shows a block scheme of the system in accordance with the present invention presenting in more detail communication links between customer-operated communication means and control units for controlling fuel supply operating units,

Figure 3 shows in more detail an embodiment of the communication means in accordance with the invention, and

Figure 4 shows a flow chart of an embodiment of an operating sequence to be effected by the system of the invention.

Although the following description and appending claims are addressing refuelling vehicles or cars, clearly also other types of vehicles to be refuelled, refilled, or reloaded, are comprised, such as there are trucks, airplanes, ships and trains.

In Figure 1 a block scheme of the system of the present invention, only presented in most generalised form, is shown. In said Figure 1 a communication means 1 has signal links 1a, 1b, respectively to and from a processing unit 2, which has further communication links 2a, 2b, respectively to and from operating control units 3.

More in detail said communication means 1 comprises all the elements necessary for communication of data concerning a refuelling procedure to a processing unit. In accordance with the invention said communication means, which is arranged within the vehicle to be refuelled, comprise an in-car operation device, or a plurality of in-car operation devices, being the only car-side means for operating the communication means.

In an advantageous embodiment of the present invention said communication means comprise a vehicle control means as a means for operating the communication means, for example a vehicle pedal, while being operated, generating an electric signal to a rear light unit which houses electronic circuitry holding data concerning the vehicle to be refuelled and the customer requiring the refuelling

AUSTRALIAN PATENT OFFICE

procedure; the circuitry is connected to an electromagnetic wave transmitter/receiver in the form of a light emitting diode for transmission of electromagnetic waves in the form of infra-red light signals to an electromagnetic wave transmitter/receiver in the form of at least one transmitter and receiver for infra-red light waves at the computer side of said links. Conventionally said electronic circuitry comprises a "custom-integrated circuit", i.e. a chip which has been adapted for a specific sequence of operations. In the present case the circuitry is adapted for transmitting and receiving specifically coded data signals.

It will be clear that communication linkage can be effected also by other types of electromagnetic waves employing corresponding transmitter/receiver combinations, consequently necessitating suitable transmitter/receiver devices.

The processing unit 2, comprising well known memory units, and an arithmetic and logic unit, processes the above signals after having been converted to processing unit 2 matched signals. In particular said signals are directed via links 2a, 2b to respective operating control units 3 comprising units for vehicle position determination, fill pipe and fuel cap position determination, fuel type determination, and customer or client identification. Generally the processing unit 2 and operating control units 3 are comprised in one housing, for example arranged within the main refuelling station building and functioning as a central computer. From this computer, circuitry is connected to different operating units, such as there are robot arm devices, fuel supply devices, and communication means as far as the computer side is involved.

In further embodiments the car-side part of said communication means comprises more sophisticated operation devices like in-car terminals comprising key-board means and display means, thus capable to be employed for much more advanced use. Also combinations of the above-mentioned in-car communication means embodiments are comprised in the present invention.

In Figure 2 a block scheme of the system in accordance with the invention is shown, presenting in more detail communication links

AUSTRALIAN PATENT OFFICE

between customer operated communication means and specific control units for controlling corresponding fuel supply operating units.

Analogous to Figure 1 communication means 10, a processing unit 20, and operating control units 31 to 36 are shown, the operating control units 31 to 36 being linked either to said processing unit 20 or between each other by means of links 31a,b to 36a,b.

Further to the above units a communication link interface 11 is shown, respectively linked to said communication means 10 through communication links 10a,b and to the processing unit 20 through links 11a,b.

The communication links, both as shown as to Figure 1 and as to Figure 2 are employed for signals including data with respect to the refuelling procedure to be carried out. More in detail, said data signals comprise first data signals, concerning said vehicle, for example fill pipe and fuel cap position data, fuel type data, and cap lock data, and second data signals relating to the customer, for example customer identification data and customer bank account data. After having been received at the computer side of the control system said data signals are processed and converted to control data signals for the above said operating units which will be explained hereinafter for the respective data, in particular with respect to Figure 4.

With reference to Figure 3 the above said communication link interface 11 is represented in more detail for an embodiment of the present invention.

As mentioned above the customer in his vehicle, after having parked his vehicle alongside a fuel dispenser unit, shall request for a refuelling procedure by operating the car-side communication operating means, thereby energizing the electromagnetic wave transmitter/receiver in the form of a light emitting diode arranged within the rear light unit as mentioned above, the light emitting diode being represented in Figure 3 by reference number 12. The electromagnetic waves in the form of infra-red signals 12a comprising the first and second data, said signals being coded to a suitable form, are transmitted from said rear light and are received

AUSTRALIAN PATENT OFFICE

by an electromagnetic wave transmitter/receiver in the form of a transmitter and receiver 13 for infra-red light waves.

The transmitter and receiver for infra-red light waves 13 converts and forwards the first and second data signals in order to be processed in the processing unit 20.

Both determination of the position of the rear light unit and forwarding the data coded is enabled by the transmitter and receiver for infra-red light waves.

The electromagnetic waves from the rear light light emitting diode 12 as such are projected upon at least a couple of electromagnetic wave receivers in the form of imaging devices (not shown), in particular a couple of imaging devices, in order to obtain its three-dimensional position in a suitable coordinate frame. Conveniently a couple of well-known charge coupled devices cameras is employed. Thus a couple of image signals is generated.

Besides the infra-red signals comprising the data coded are received, converted and forwarded by means of suitable semi-conductor infra-red receiver devices such as there are Si-receiver devices well known in the art. For those skilled in the art it will be clear that said devices are matched to circuitry for conducting the signals to the processing unit.

More in detail as to the determination of the above three-dimensional position the couple of electromagnetic wave receivers in the form of the cameras mentioned watch an area nearby the fuel dispenser unit within which vehicle rear lights may be expected. The infra-red light transmitted by such rear light light emitting diodes is modulated in such a way that it coincides with camera scan frequencies. An image processing system which is coupled to said cameras distinguishes the blinking light emitting diode from the surroundings by using successively well-known optical filtering, image subtraction and centre of gravity calculation techniques.

In the next step the respective images, i.e. the centres of gravity, have to be combined to a three-dimensional position of the electromagnetic wave transmitter/receiver on the automotive vehicle in the form of the rear light light emitting diode a coordinate

AUSTRALIAN PATENT OFFICE ML

frame which includes the dispenser unit and which will be employed for the further refuelling procedure, in particular enabling a robot arm being moved to and being positioned adjacent to the fuel cap concerned.

Among the plurality of well-known position determination techniques the methods of triangulation (using the well-defined camera positions) or perspective transformation (using an image plane transfer matrix) have appeared advantageous. More in detail said transformation conventionally employs further reference points, for example reference light emitting diodes, which are also projected.

For those skilled in the art it will be clear that in the case of employing said two cameras at least one two-dimensional image has to be formed. As a consequence other combinations will be clear, for example three one-dimensional images generated correspondingly by means of three imaging devices.

In a further advantageous embodiment of the invention means are provided for generating gauge signals to be combined with the above image signals. For example an additional light emitting diode on said dispenser unit will enable continuous monitoring of the operation performance of the above cameras.

In yet a further embodiment, the colour and/or blinking frequency of existing visible rear light indicators are employed as the 3D position reference point or as a second reference point for car and fuel cap position measurement as explained above.

In Figure 2 a position determination means 31 receives the above said image signals 11a via the processing unit 20, and, after determination of the position, data signals generated are supplied via a signal link 31b to a memory unit of the processing unit 20 for being used in the further refuelling procedure.

In the following on the contrary the signal forms representing coded data as mentioned above are of interest as well. The data signals coded in digital form are received by well known receiver means and processed in operating control units to identification control data, bank account control data, fill pipe and fuel cap

AUSTRALIAN PATENT OFFICE

position relative to the electromagnetic wave transmitter/receiver on the automotive vehicle, cap lock control data and fuel type control data. In Figure 2 the respective blocks represent respective processing units for obtaining the above data signals, i.e. block 32 for the customer relating data, block 33 for the fuel type data and block 34 for cap relating data.

More in detail it will be clear that customer relating control data are generated as to identification and bank account to satisfy requirements imposed by the supplier. Consequently the processing unit will have connections with data banks concerning said customer data. So, if the requirements cannot be satisfied the procedure will be aborted.

The same can be said about the vehicle data. For example, if the fuel cap involved cannot be opened by means of the respective operating unit for unlocking the cap, the procedure will be aborted also.

After approval of the data in order to start the fuel supply step the generated control data are read from the respective memory units and combined to a combined data acceptance signal by means of the processing unit. Said signal includes combination of data on the position of the electromagnetic wave transmitter/receiver on the automotive vehicle in the form of the light emitting diode in the rear light and fuel cap position data in order to obtain cap position control data.

Said combined data acceptance signal is sent to a robot arm control unit 35 via a link 35a in order to enable a robot arm to carry out the fuel supply step.

Subsequently the robot arm will be moved to and connected with a fuel supply gate delivering the type of fuel requested. After having been connected the robot arm is moved to the fuel cap. The fuel cap is opened by means of an unlocking device built in the nozzle end of the robot arm.

In a further advantageous embodiment a two-step unlocking operating is carried out, a first step for opening an outer cap hinged and urged by a spring to its opened or closed position, and a

AUSTRALIAN PATENT OFFICE

second step for opening a mechanically or electromagnetically locked outer end of a vehicle tank fill pipe inlet. It will be clear that also said two-step arrangement data are comprised in the coded first data.

Thereafter a robot arm nozzle is inserted into said fill pipe, the position of which was also comprised in the coded data and fuel supply is started. In particular said fill pipe position data include the fill pipe position relative to the electromagnetic wave transmitter/receiver on the automotive vehicle, and fill pipe inlet direction relative to the cap position.

In a further embodiment of the present invention further light emitting diodes on the robot arm nozzle will enable robot arm position and orientation control. Thus accurate positioning of the robot arm is obtained; moreover mechanically flexible robot constructions such as advanced robot hands can be applied.

Furthermore, it is noticed that the light emitting diodes arranged upon the robot arm can be used as the reference points as discussed above with respect to the position determination method.

For finishing the fuel supply step some alternatives exist. Referring again to Figure 2, in the one a sensor 36 arranged upon said robot arm nozzle and activated during refuelling by a signal link 36a detects that the tank has been filled up, and generates a detection signal 36b which is directed to the processing unit 20 which in turn continues data processing in that said robot arm will be moved back to its starting position. In the other, dependent on the facilities arranged in the vehicle having been handled, an interruption signal for finishing the fuel supply step is generated by the customer, and subsequently transmitted to the processing unit, processed by the processing unit, and sent to the robot control unit 35 to stop the fuel supply step. According to said control signal the robot arm is moved back to its starting position. In both alternatives a reversed fuel cap handling procedure is followed.

As a last event in finishing said refuelling procedure the customer has to be informed that he is ready for departure. Again

AUSTRALIAN PATENT OFFICE

dependent on the facilities present in the vehicle, in the one on a display of the in-car terminal the above information is presented, whereas in the other for example a light signal or an acoustic signal is observed by the customer.

Now referring to Figure 4 a flow chart of an embodiment of an operating sequence to be effected by the system of the invention is shown.

In said Figure 4 steps (a) to (k) are distinguished. Said steps mainly correspond with the handlings carried out by the system as explained above.

In step (a) the start is presented. The customer has to start the procedure as mentioned above after having parked his vehicle alongside the fuel dispenser unit. Besides the above in a further embodiment a parking detecting and parking control procedure can be provided in order to park at the right place thereby assuring that the robot arm can reach the fuel cap.

In steps (b) and (c) respectively the above mentioned second and first data signals are processed in order to generate a combined data acceptance signal for further control of the robot arm and starting the fuel supply step of the refuelling procedure. In said blocks neither further indications are shown as to the 3D-position determination, nor further details for the case no acceptance signal can be generated. For said case only the possibility for finishing the procedure is shown but for those skilled in the art it will be clear that alternative steps after interruption may be chosen for such a flow chart.

In steps (d), (e) and (f) fuel is supplied by means of the robot arm operation as explained above.

In step (g) finishing or interruption of the refuelling procedure is presented whereas in step (h) a further check on said procedure is carried out.

In steps (i) and (j) finishing the refuelling procedure is carried out in accordance with the data supplied. Corrections or modifications can be carried out by going for step (k), being a restarting operation.

AUSTRALIAN PATENT OFFICE

In a further advantageous embodiment of the system of the present invention said communication means is communicating further refuelling procedure data. In particular data as to the amount of fuel to be supplied, or the money equivalent unto which fuel is desired can be transmitted as coded data also.

In the sequence and system shown above the refuelling procedure is carried out fully automatically. However, if certain facilities are not present, for example in the case of introduction of the fully automatic system, the system is capable to be used for the part already implemented. Correspondingly only part of the data is used then, for example only the first data signals for guiding the robot operations. Generally, for such cases system and sequence comprise slight modifications required for such conditions.

In accordance with the invention electronic circuitry for holding the above-mentioned data and to be used for communication to the above system is provided also.

The invention furthermore provides a fuel dispenser unit coupled to the above system.

Various modifications of the present invention will become apparent to those skilled in the art from the foregoing description and accompanying drawings. For example a combination of communication by means of the rear light light emitting diode and a freely movable and hand-operated service panel for infra-red communication is covered also. At least position determination has to be carried out with fixed points, i.e. for example said rear light light emitting diode. Such modifications are intended to fall within the scope of the appended claims.

AUSTRALIAN PATENT OFFICE ML

The claims defining the invention are as follows:-

1. A system for control of automatic refuelling an automotive vehicle parked alongside a fuel dispenser unit, which system comprises

(a) communication means which communication means include means for operating the communication means arranged in the automotive vehicle and an electromagnetic wave transmitter/receiver arranged on the automotive vehicle, and an electronic circuitry which is connected to the electromagnetic wave transmitter/receiver, which electronic circuitry holds data including fuel pipe and fuel cap position data; and

(b) at the fuel dispenser unit, a processing unit, an electromagnetic wave transmitter/receiver connected to the processing unit, operating control units connected to the processing unit for controlling fuel supply operating units and for vehicle position determination, fill pipe and fuel cap position determination, and a couple of electromagnetic wave receivers connected to the operating control unit for the vehicle position determination,

wherein when the communication means is activated the electromagnetic waves emitted by the electromagnetic wave transmitter/receiver on the automotive vehicle are received by both the electromagnetic wave transmitter/receiver and the couple of electromagnetic wave receivers of the fuel dispenser unit.

2. System as claimed in claim 1, wherein the electromagnetic wave transmitter/receiver on the automotive vehicle and the electromagnetic wave transmitter/receiver of the fuel dispenser unit are transmitters and receivers for infra-red light waves, and wherein the couple of electromagnetic wave receivers are receivers for infra-red light waves.

3. System as claimed in claim 1 or 2, wherein the system for operating the communication means is a vehicle control means.

AUSTRALIAN PATENT OFFICE

4. System as claimed in any one of the claims 1-3, wherein the electromagnetic wave transmitter/receiver of the automotive vehicle is arranged in a rear light.

5. System as claimed in any one of the claims 1-4, wherein the system for operating the communication means is the brake pedal.

6. A system for control of automatic refuelling an automotive vehicle parked alongside a fuel dispenser unit, which system is substantially as hereinbefore described with reference to the Figures.

Dated 8 March, 1996
Shell Internationale Research Maatschappij B.V.
Patent Attorneys for the Applicant/Nominated Person
SPRUSON & FERGUSON

AUSTRALIAN PATENT OFFICE

37508/93

FIG.1

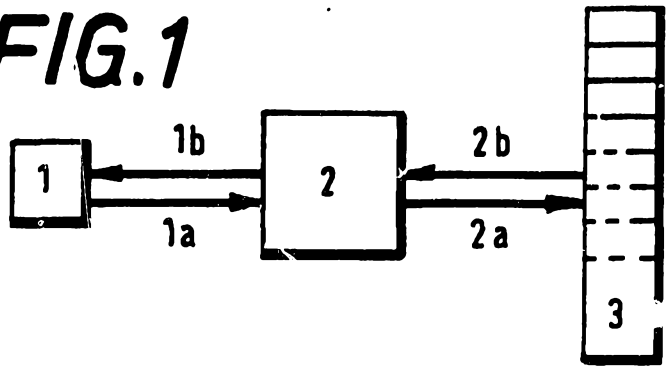

FIG.2

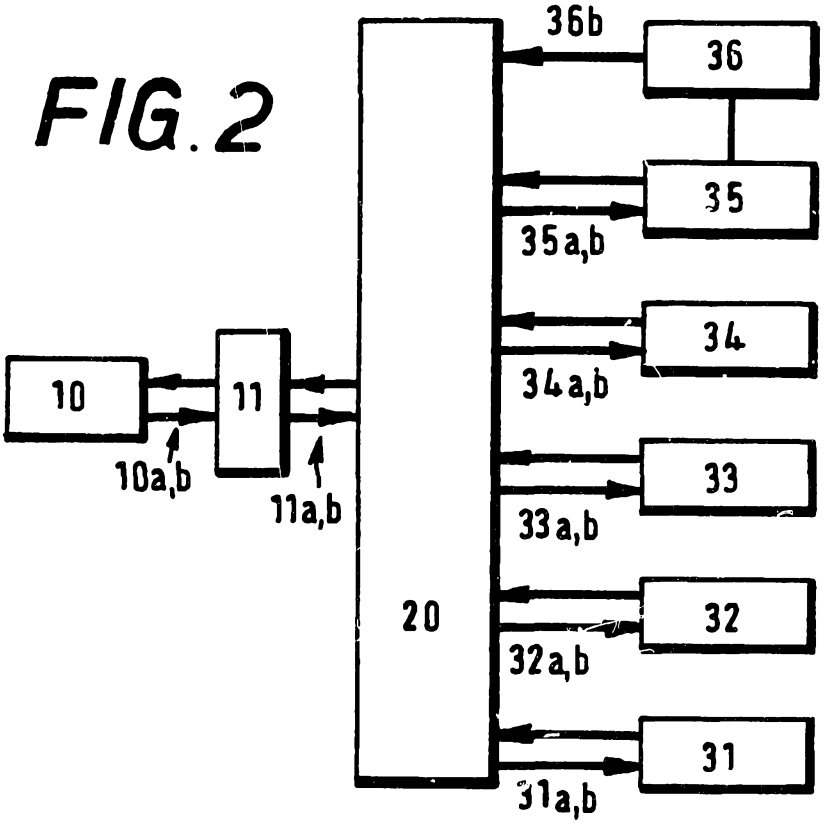

FIG.3

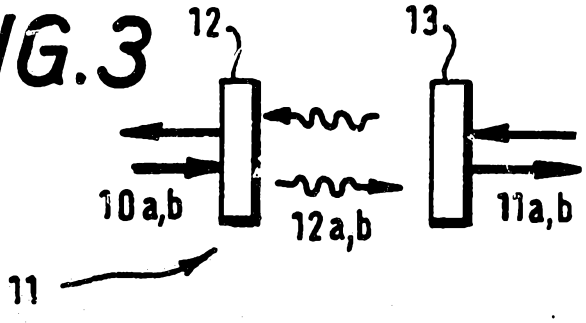

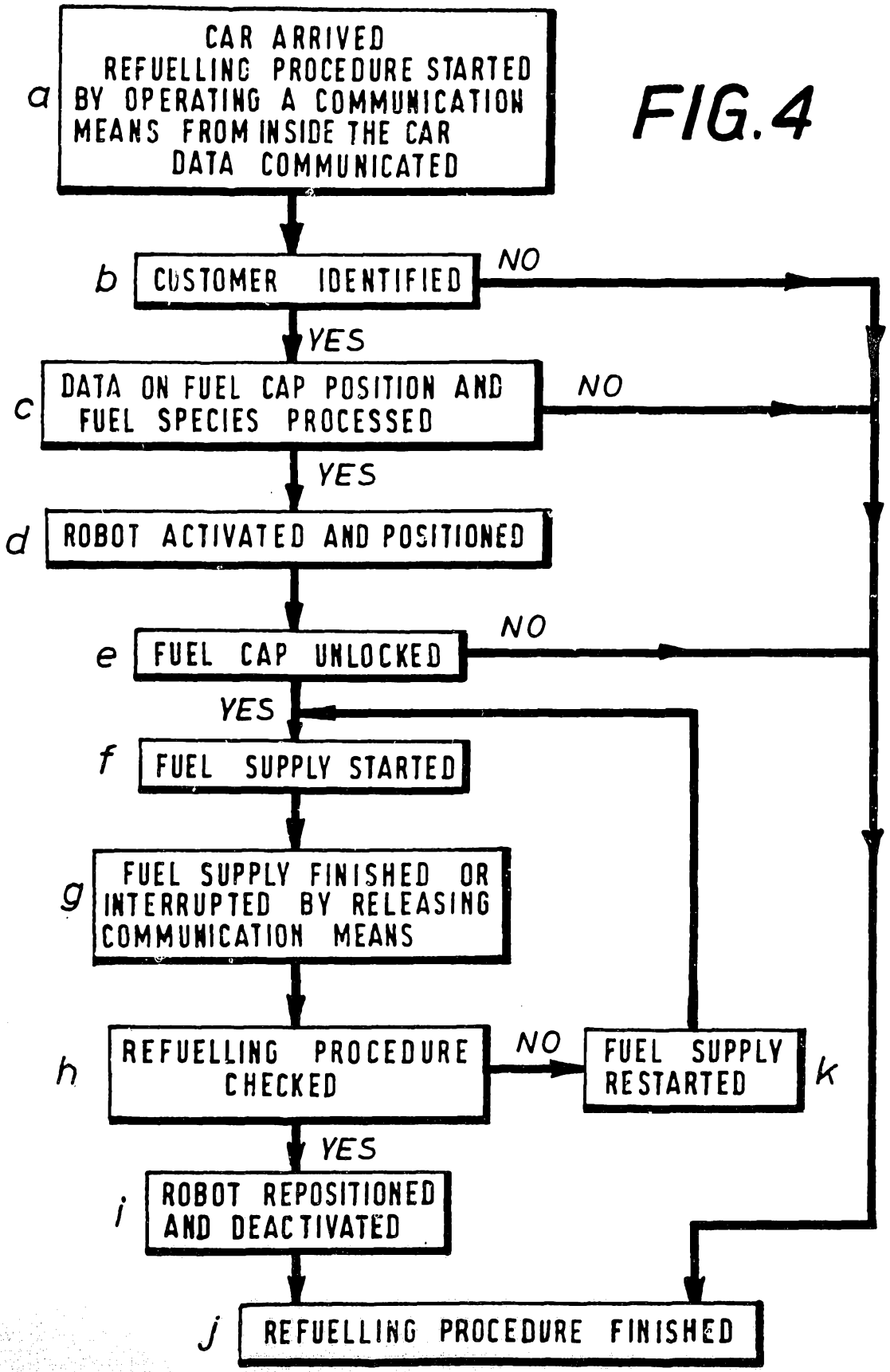
a
CAR ARRIVED
REFUELLING PROCEDURE STARTED
BY OPERATING A COMMUNICATION
MEANS FROM INSIDE THE CAR
DATA COMMUNICATED
b
CUSTOMER IDENTIFIED
NO
YES
c
DATA ON FUEL CAP POSITION AND
FUEL SPECIES PROCESSED
NO
YES
d
ROBOT ACTIVATED AND POSITIONED
e
FUEL CAP UNLOCKED
NO
YES
f
FUEL SUPPLY STARTED
g
FUEL SUPPLY FINISHED OR
INTERRUPTED BY RELEASING
COMMUNICATION MEANS
h
REFUELLING PROCEDURE
CHECKED
NO
k
FUEL SUPPLY
RESTARTED
YES
i
ROBOT REPOSITIONED
AND DEACTIVATED
j
REFUELLING PROCEDURE FINISHED

FIG.4

INTERNATIONAL SEARCH REPORT

International Application No PCT/EP 93/00681

I. CLASSIFICATION OF SUBJECT MATTER (if several classification symbols apply, indicate all)[6]

According to International Patent Classification (IPC) or to both National Classification and IPC

Int.Cl. 5 B67D5/08

II. FIELDS SEARCHED

Minimum Documentation Searched[7]

Classification System	Classification Symbols
Int.Cl. 5	B67D

Documentation Searched other than Minimum Documentation to the Extent that such Documents are Included in the Fields Searched[8]

III. DOCUMENTS CONSIDERED TO BE RELEVANT[9]

Category °	Citation of Document, [11] with indication, where appropriate, of the relevant passages [12]	Relevant to Claim No.[13]
A	EP,A,0 418 744 (ETS ELEKTRONIK) 27 March 1991 cited in the application see the whole document	1,2, 8-11,13, 14, 16-18, 20-22, 26,28

° Special categories of cited documents : [10]

"A" document defining the general state of the art which is not considered to be of particular relevance

"E" earlier document but published on or after the international filing date

"L" document which may throw doubts on priority claim(s) or which is cited to establish the publication date of another citation or other special reason (as specified)

"O" document referring to an oral disclosure, use, exhibition or other means

"P" document published prior to the international filing date but later than the priority date claimed

"T" later document published after the international filing date or priority date and not in conflict with the application but cited to understand the principle or theory underlying the invention

"X" document of particular relevance; the claimed invention cannot be considered novel or cannot be considered to involve an inventive step

"Y" document of particular relevance; the claimed invention cannot be considered to involve an inventive step when the document is combined with one or more other such documents, such combination being obvious to a person skilled in the art.

"&" document member of the same patent family

IV. CERTIFICATION

Date of the Actual Completion of the International Search	Date of Mailing of this International Search Report
18 JUNE 1993	0 8. 07. 93
International Searching Authority	**Signature of Authorized Officer**
EUROPEAN PATENT OFFICE	PFLUGFELDER G.F.

ANNEX TO THE INTERNATIONAL SEARCH REPORT ON INTERNATIONAL PATENT APPLICATION NO.

EP 9300681
SA 71553

This annex lists the patent family members relating to the patent documents cited in the above-mentioned international search report.
The members are as contained in the European Patent Office EDP file on
The European Patent Office is in no way liable for these particulars which are merely given for the purpose of information. 18/06/93

Patent document cited in search report	Publication date	Patent family member(s)	Publication date
EP-A-0418744	27-03-91	DE-A- 3930981	28-03-91

EPO FORM P079

For more details about this annex : see Official Journal of the European Patent Office, No. 12/82