United States Patent [19]

Neville et al.

[11] 3,900,062

[45] Aug. 19, 1975

[54] **ZERO DEGREE BELTED TIRES BUILT WITH HIGH SOFT STRETCH BELT-FORMING TAPES**

[75] Inventors: **James J. Neville**, Kinnelon; **Wesley Ferrell**, Wayne; **Daniel Shichman**, Cedar Grove, all of N.J.

[73] Assignee: **Uniroyal, Inc.**, New York, N.Y.

[22] Filed: **May 10, 1973**

[21] Appl. No.: **359,118**

Related U.S. Application Data

[62] Division of Ser. No. 160,675, July 8, 1971.

[52] **U.S. Cl.** ..... **152/361 FP**; 152/361 R; 161/57; 161/77

[51] **Int. Cl.** **B60c 9/16**

[58] **Field of Search** ..... 152/356, 361 R, 361 FP, 152/361 DM, 362 CS; 161/57, 60, 77, 82, 88, 90, 92, 101, 142

[56] **References Cited**

UNITED STATES PATENTS

2,982,328	5/1961	Emanueli et al.	152/361 FP
3,244,215	4/1966	Bridge, Jr. et al.	152/362 CS
3,252,833	5/1966	Skobel	273/72
3,283,389	11/1966	Nisbet et al.	161/89
3,422,874	1/1969	Weitzel	152/361 R
3,565,740	2/1971	Lazar et al.	161/57
3,607,497	9/1971	Chrobak	152/361 R

Primary Examiner—M. Henson Wood, Jr.
Assistant Examiner—Reinhard J. Eisenzopf
Attorney, Agent, or Firm—Norbert P. Holler, Esq.

[57] **ABSTRACT**

The single-stage building of 0° belted pneumatic tires completely in flat band form on standard building drums, is disclosed. The feasibility of the process rests on the provision of the substantially inextensible metallic or non-metallic belt cords in the form of longitudinally extensible high "soft stretch" tapes. In a preferred version of the invention, the tape is composed of a plurality of cords each having formed therein a multiplicity of undulations which in any given straight length of the tape are substantially planar, the cords being disposed in side by side relation so that the planes of the undulations of each cord are generally parallel to the planes of the undulations of each adjacent cord, and the cords together with a relatively weak and frangible but only minimally undulated stabilizing yarn for the tape being secured to each other and held in their undulating state by a relative weak, chain stitch knitted, frangible stitching yarn or thread. The belt-forming structure is built by helically winding such tape circumferentially of the building drum in the medial region of the still cylindrical or flat band carcass at an angle of substantially 90° to a plane including the common axis of the carcass and the building drum, with the undulations of the cords "on end", i.e., in planes generally normal to the surface of the building drum.

69 Claims, 35 Drawing Figures

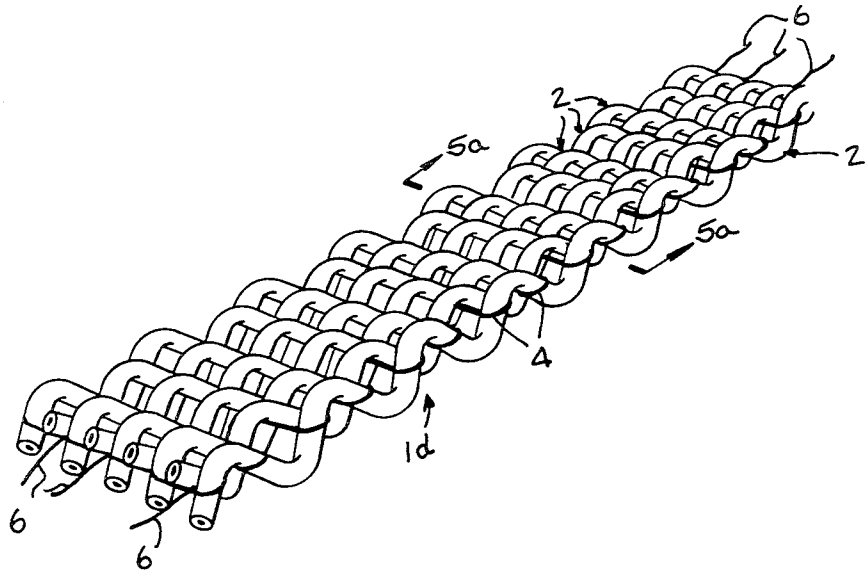

Fig. 1.

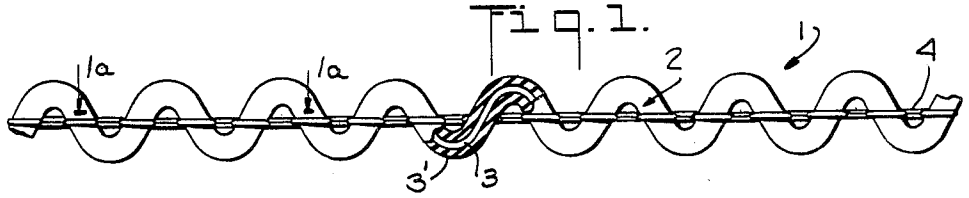

Fig. 2.

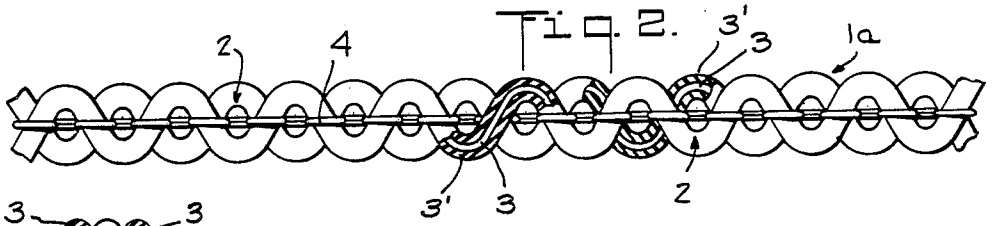

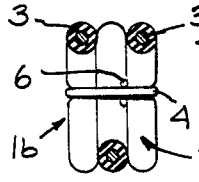

Fig. 3a.

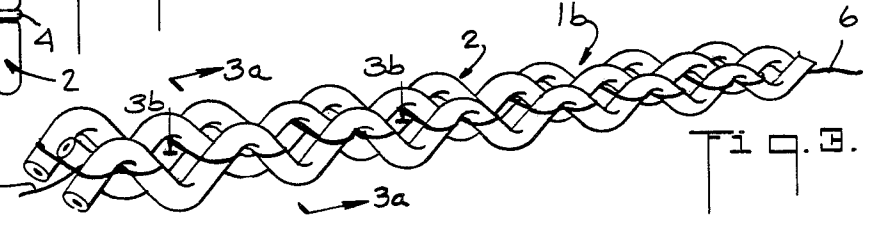

Fig. 3.

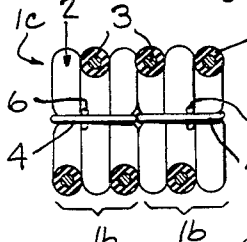

Fig. 4a.

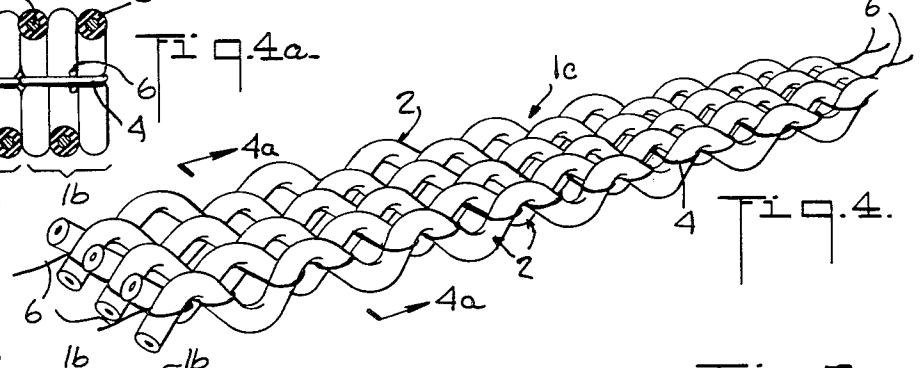

Fig. 4.

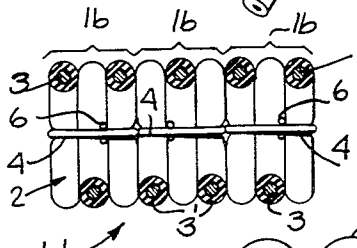

Fig. 5a.

Fig. 5.

Fig. 1a.

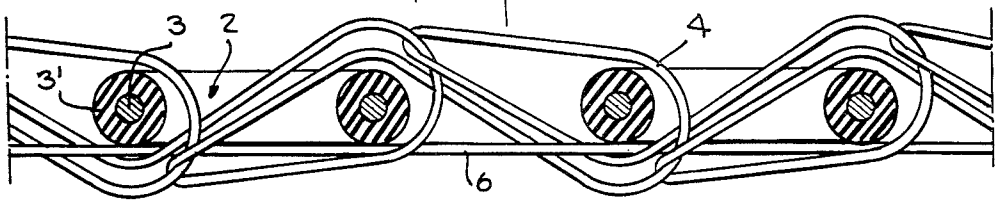

Fig. 3b.

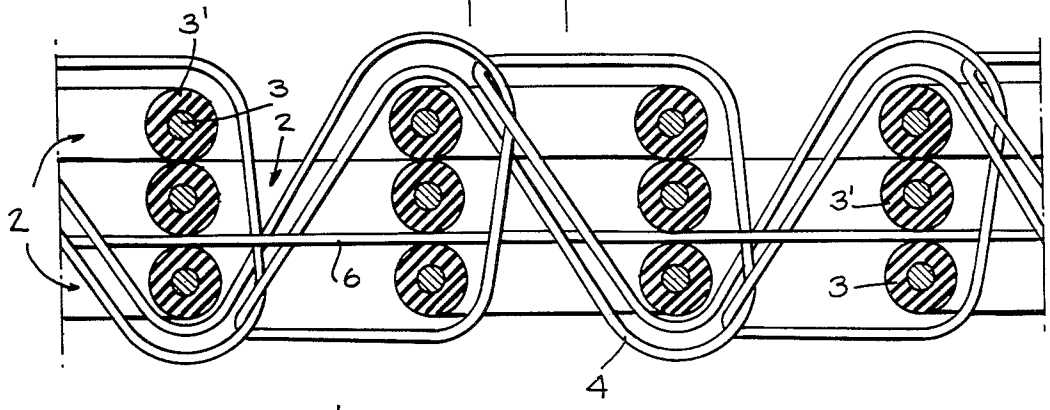

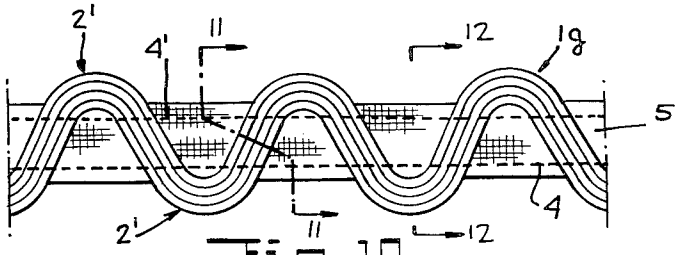

Fig. 10.

Fig. 11.

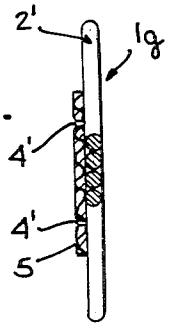

Fig. 12.

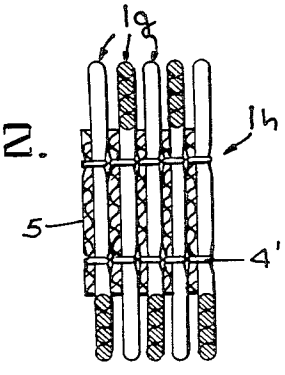

Fig. 6.

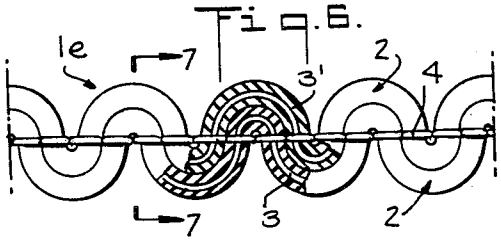

Fig. 7.

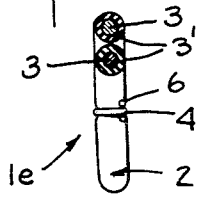

Fig. 8.

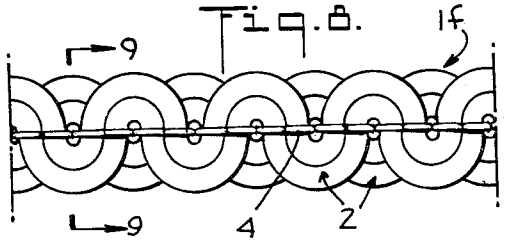

Fig. 8.

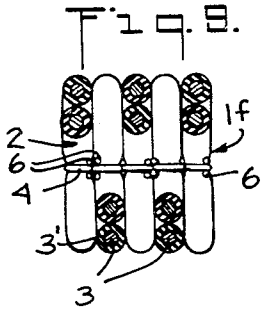

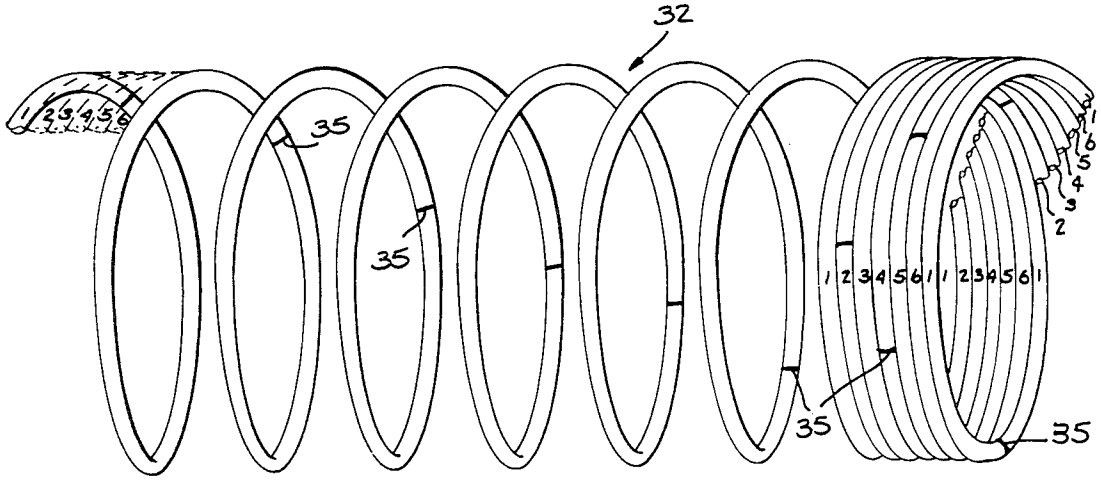

Fig. 18.

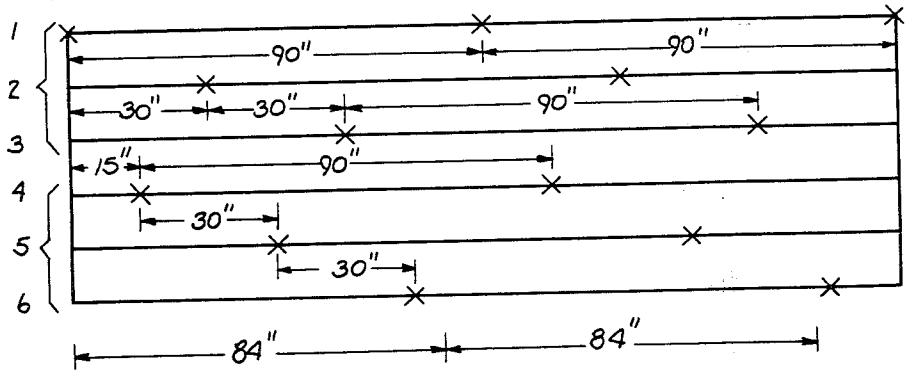

Fig. 18a.

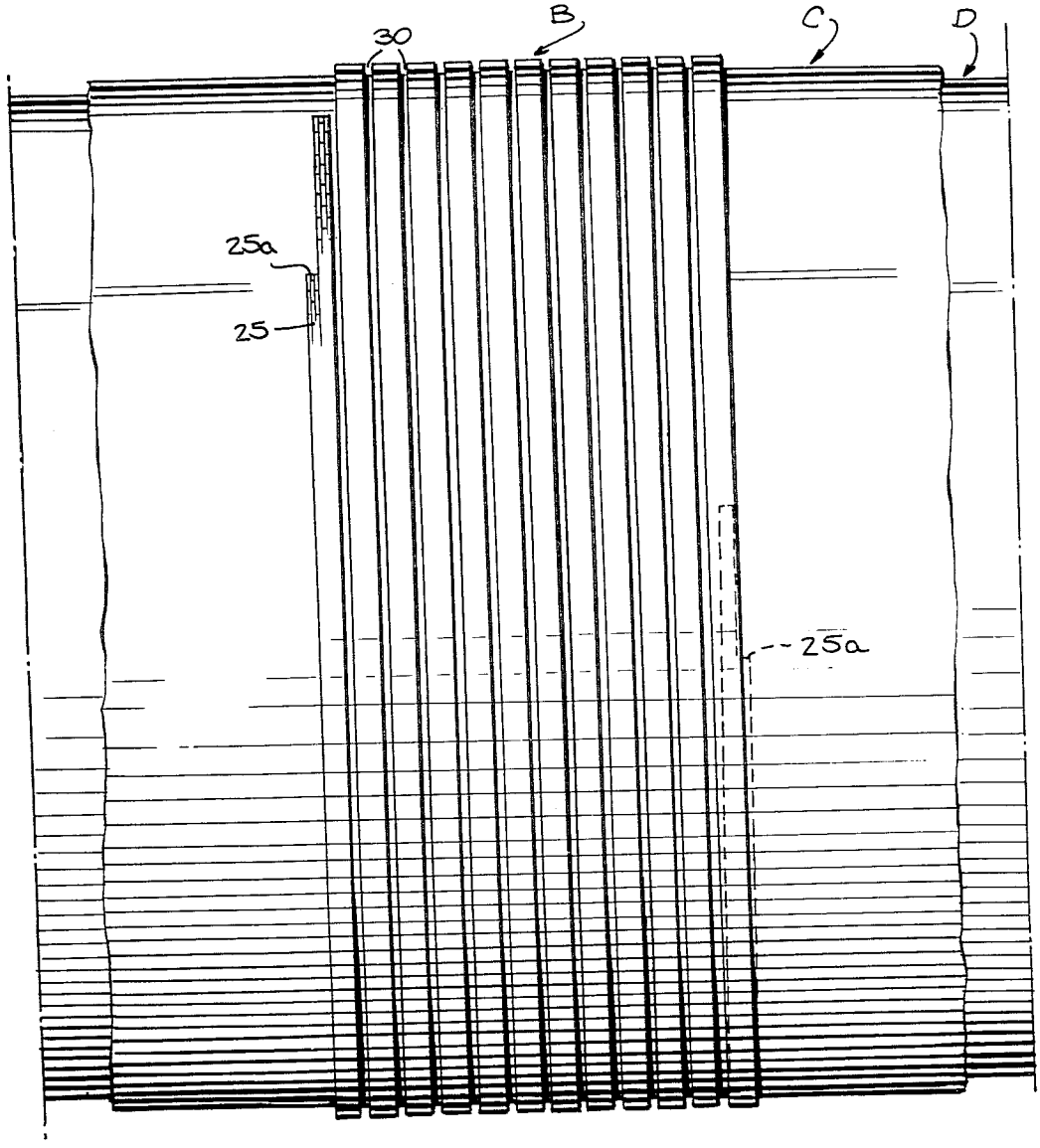

Fig. 13.

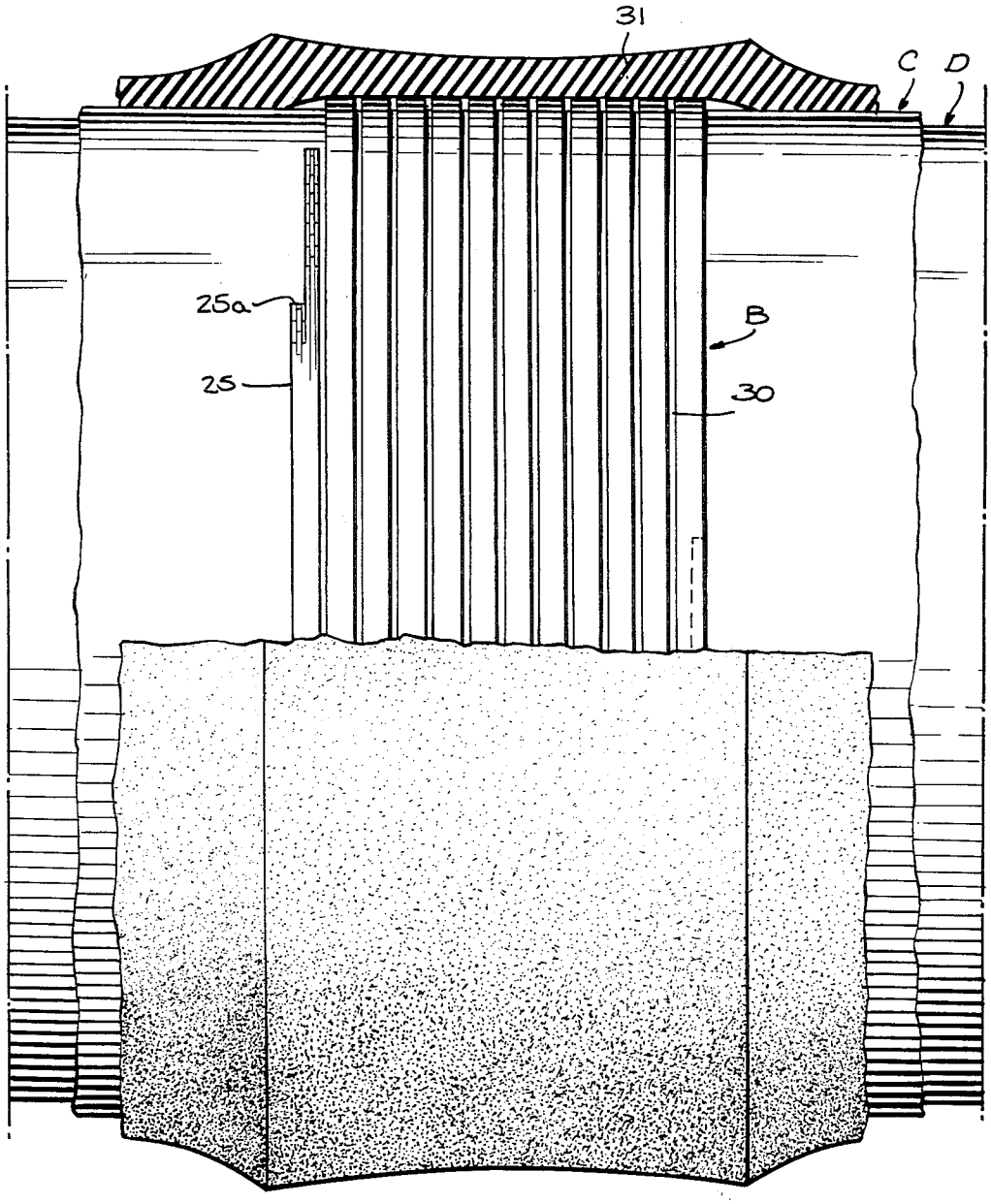

Fig. 14.

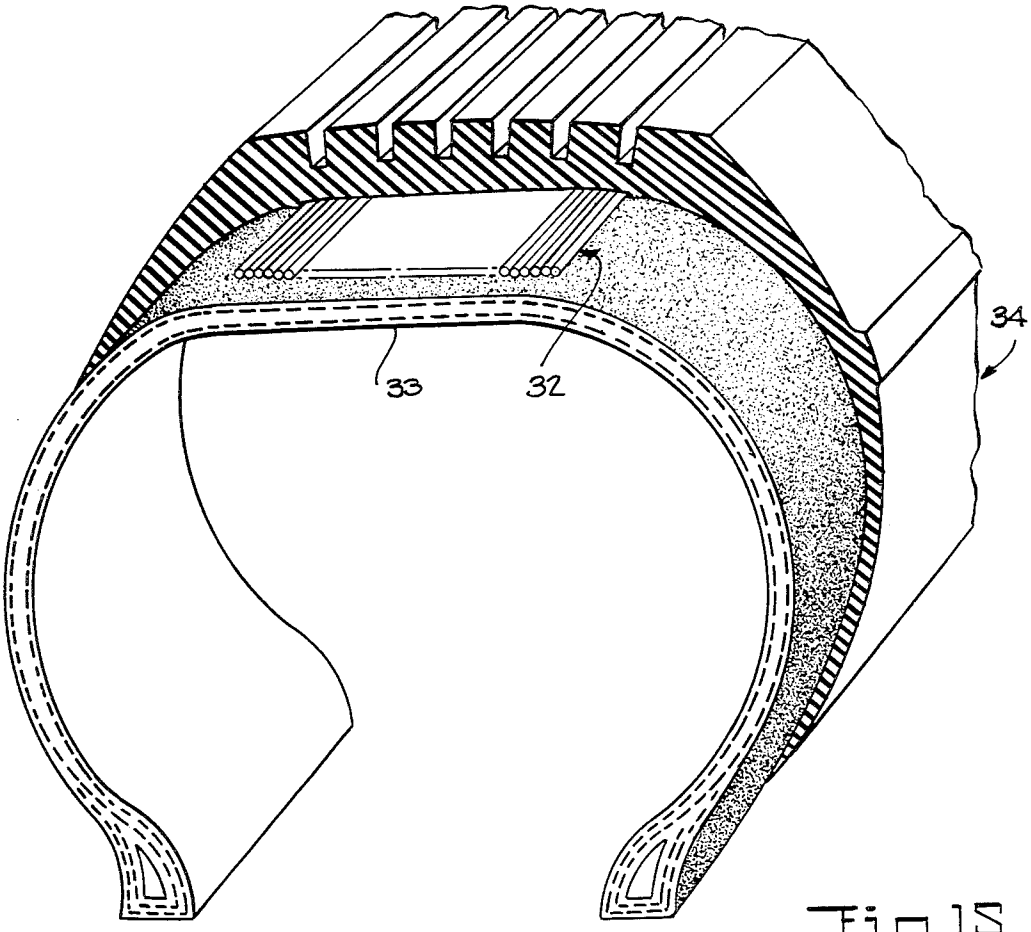

Fig. 15.

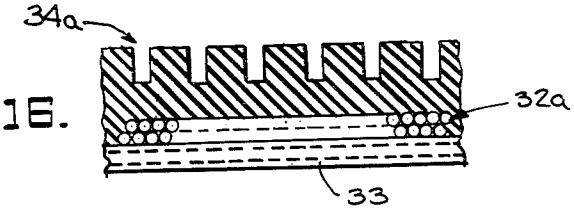

Fig. 16.

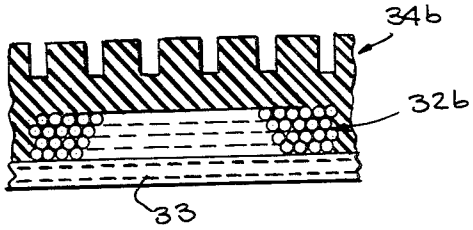

Fig. 17.

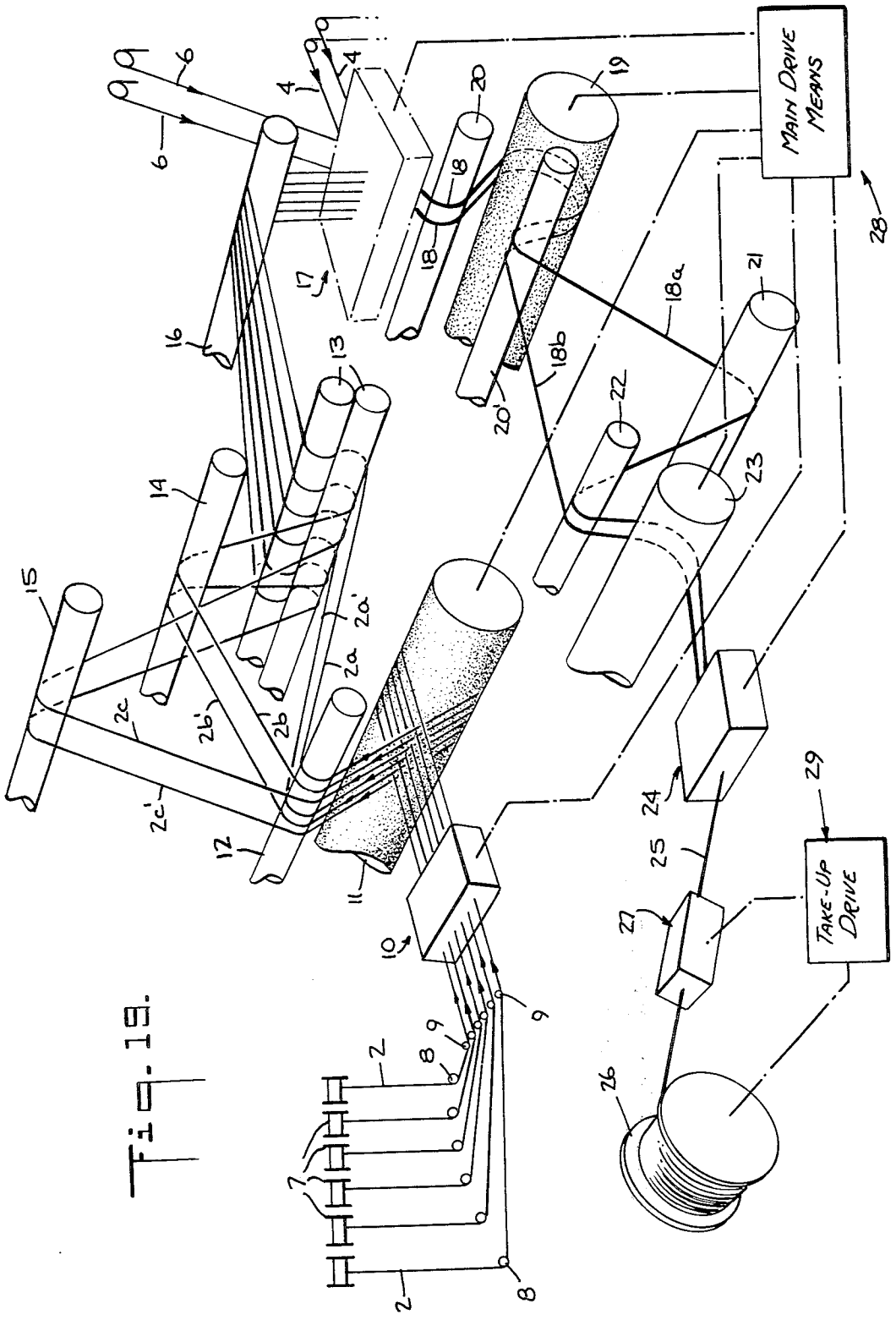

Fig. 19.

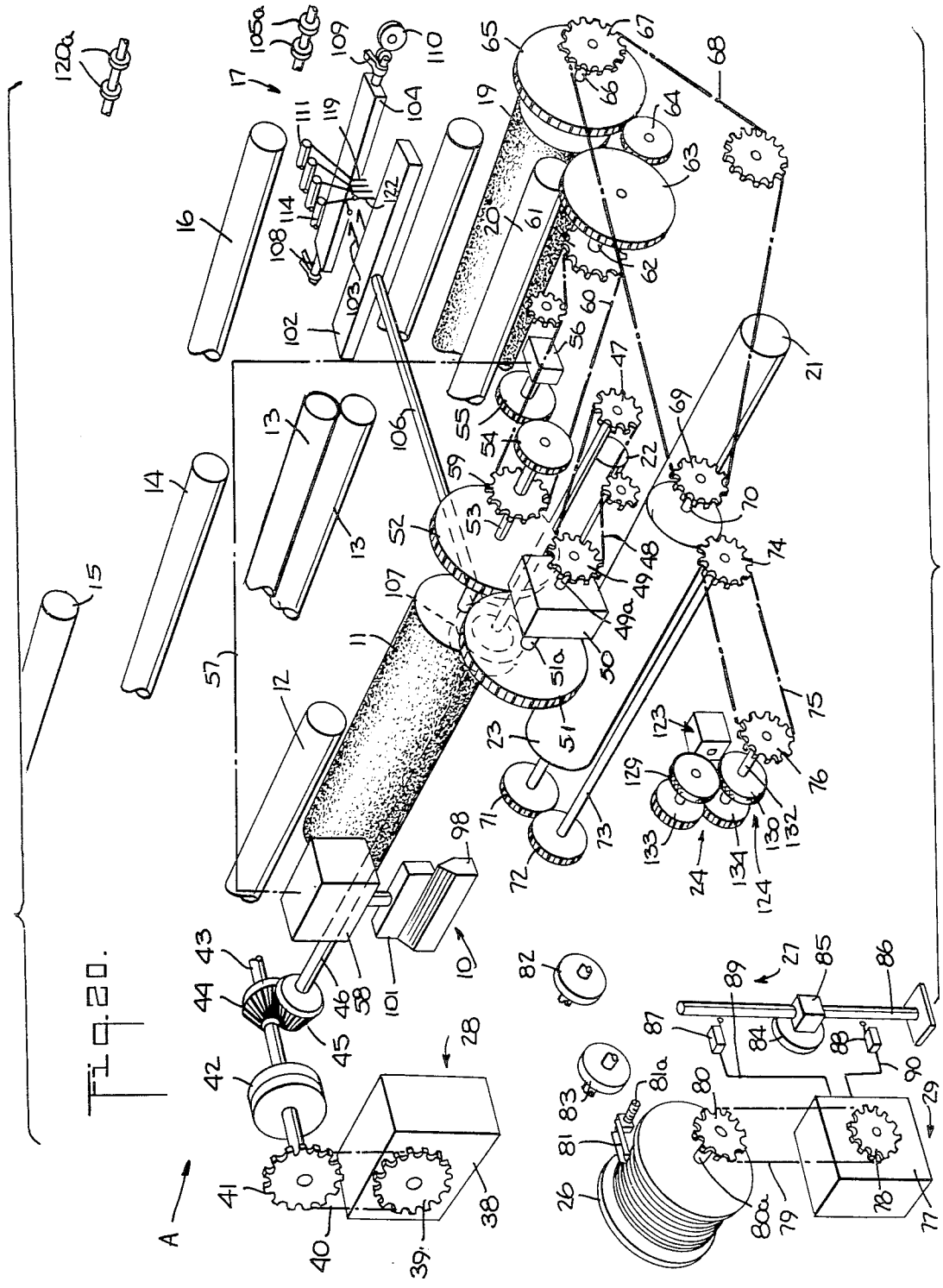

FIG. 20.

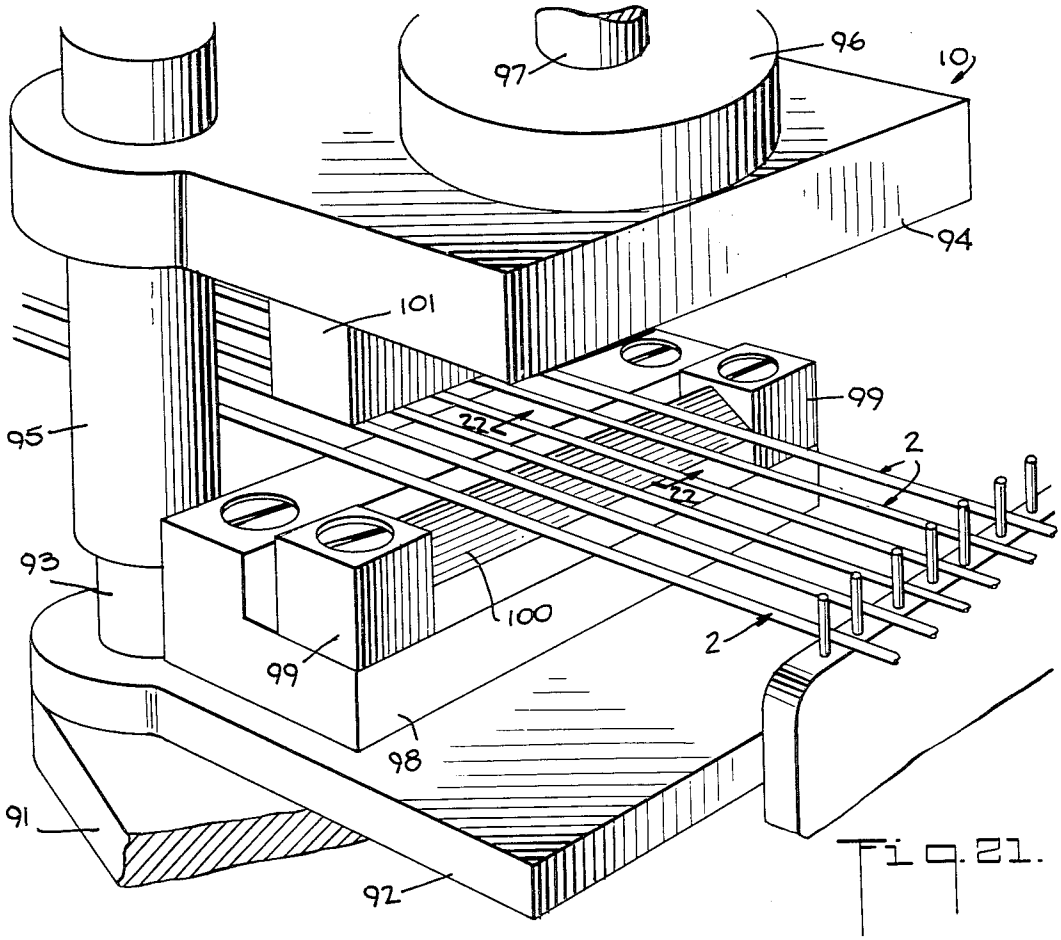

Fig. 21.

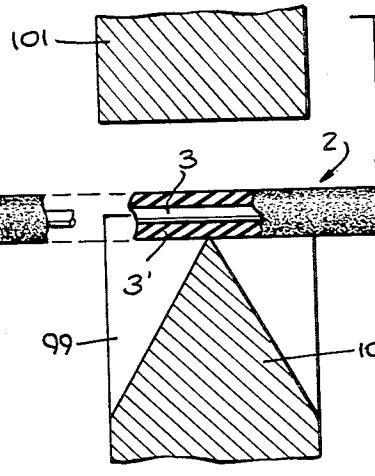

Fig. 22.

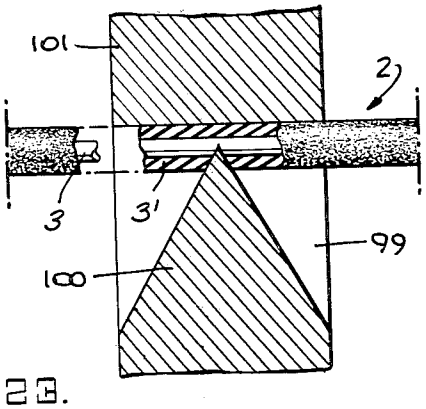

Fig. 22a.

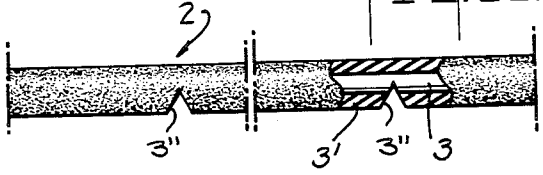

Fig. 22b.

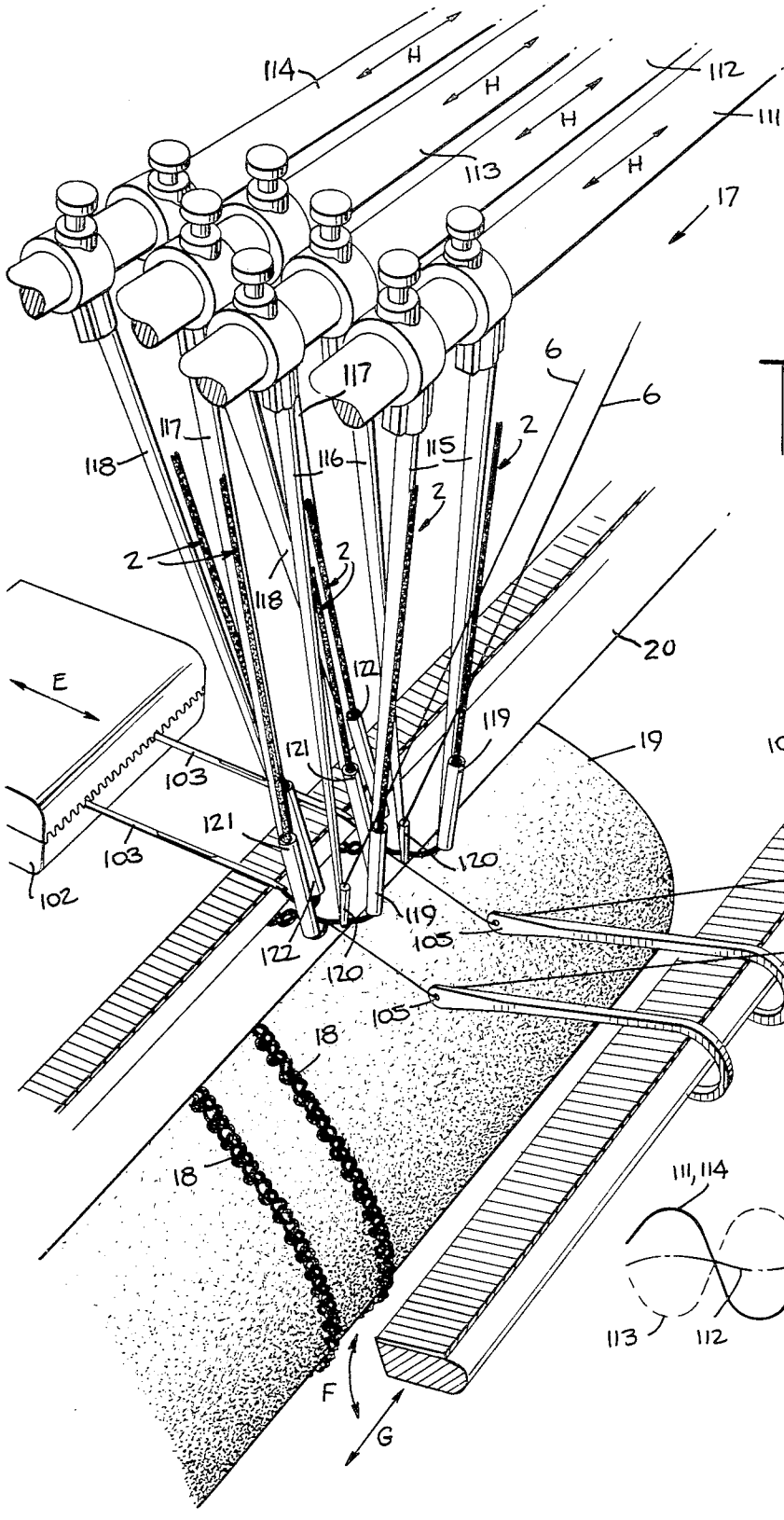

Fig. 24.

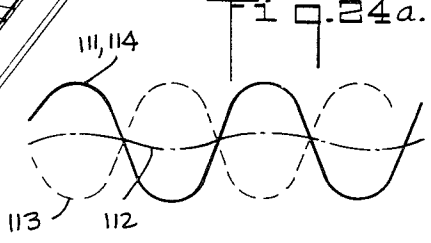

Fig. 24a.

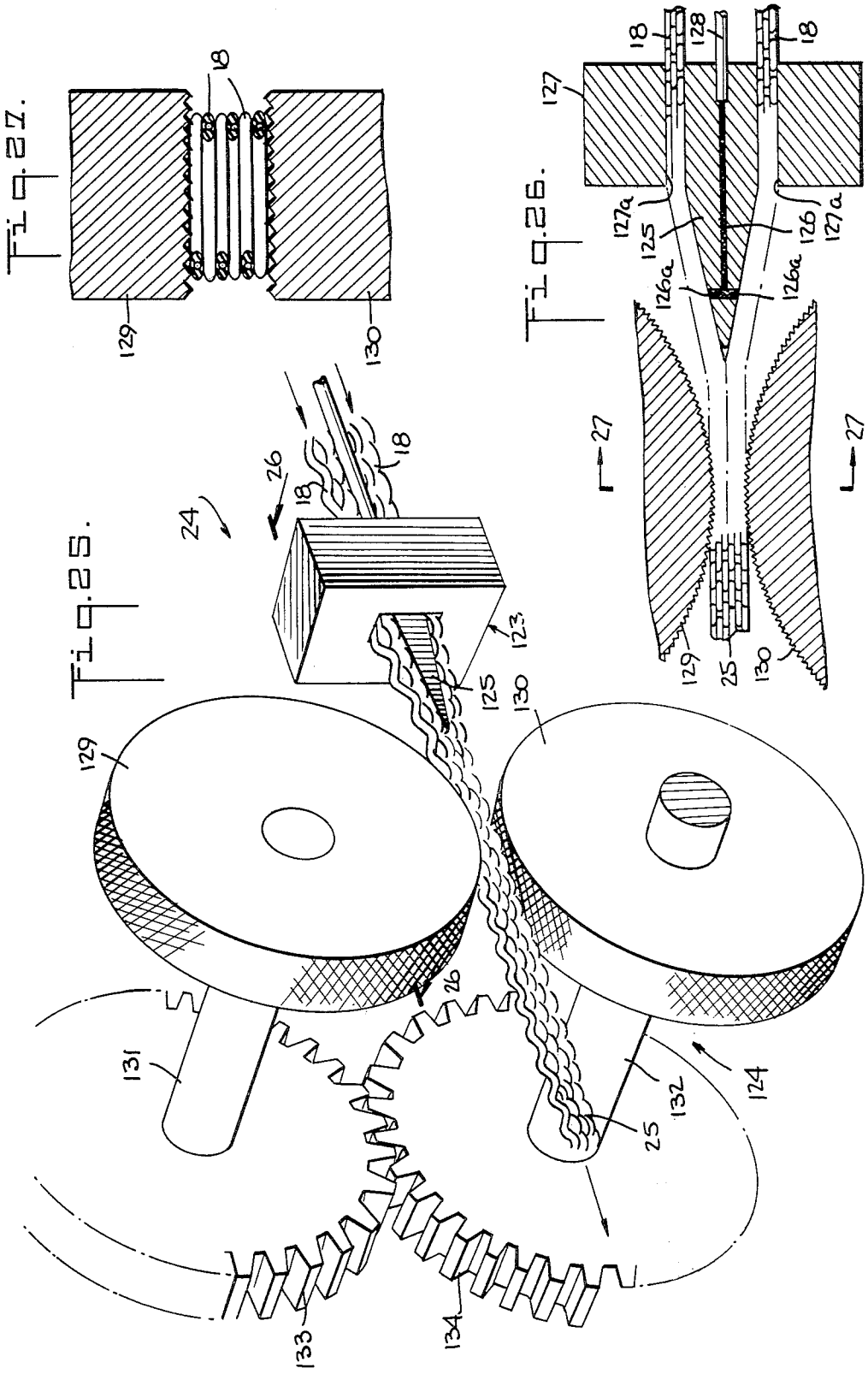
Fig. 27.
18
129
130
Fig. 26.
18
128
18
127
127a
125
126
127a
126a
126a
27
27
129
25
130
Fig. 25.
24
26
18
18
123
125
130
129
26
131
132
124
25
133
134

ZERO DEGREE BELTED TIRES BUILT WITH HIGH SOFT STRETCH BELT-FORMING TAPES

This is a division of application Ser. No. 160,675, filed July 8, 1971.

This invention relates to 0° belted pneumatic rubber tires, as well as to high soft stretch tapes made of substantially inextensible reinforcing cords and adapted for use in the building and protection of 0° belted tires and in particular for use in the formation of the belts of such tires.

Improving both the safety and the service life of pneumatic vehicle tires has been a goal of the tire industry for many years, with much attention being focused on such tire characteristics as tread wear, handling and road-holding ability, especially during cornering. In this regard, the desirability of producing tires with a broadened "footprint" (the portin of a tire tread in contact with the road surface when the tire is under load on a moving vehicle) has long been recognized.

A major step in this direction has been the advent of the belted tire, wherein a circumferentially extending belt or belt-like structure is incorporated under the tread in the crown region of the tire carcass so as to introduce a degree of restraint into the deformability of the tread. In such tires, as is well known, the belt is made of one or more pieces of generally inextensible reinforcing cord which, in any given ply, are parallel to each other and confined between ply-wide skim coats of rubber and may be oriented at a predetermined angle of up to about 35° or so to the mediam equatorial of mid-circumferential plane of the tire. Such plies are generally provided in pairs, with the cords in paired plies being oriented at equal but opposite angles to said plane.

It should be noted, by way of definition, that in this specification and the appended claims, the terms "0° belt" and "0° belted" are used to describe tire constructions in which the belt cords are oriented either truly circumferentially of the tire or at an angle of substantially 0°, i.e. preferably less than 1° but in any event no more than about 2°, to that direction. The terms "bias belt" and "bias belted" are used to describe tire construction in which the belt cords are oriented at angles greater than 2° relative to the circumferential direction. The term "low angle" is used to designate bias belts having a cord angle of up to about 25° to the circumferential direction, while the term "high angle" is used to designate bias belts having a cord angle above about 25° to the circumferential direction. The term "rubber" as used herein is intended to denote both natural and synthetic rubbes or rubberlike materials, and blends thereof, specific formulations of which for a wide variety of different tire applications are well known and need not be explicitly set forth herein. The term "substantially inextensible" is used herein to designate the essential characteristics of filamentary reinforcing cords, which may be made of metalic materials such as steel wire or the like or of non-metallic materials such as cotton, rayon, nylon, polyester, polyvinyl alcohol, glass fiber, or the like, of being able to withstand, without substantial elongation, the tensile stresses in the belt normally encountered in service.

In the United States, at least, as far as we are aware, the production of 0° belted tires has not been entered into by the industy on a major scale, especially in the areas of passenger, truck and other on-the-road tires, because of certain manufacturing drawbacks and disadvantages which have been encountered. Principally, this has been due to the fact that, by virtue of the inextensibility of the belt cords, the production of 0° belted tires has generally required a two-stage building operation, in which the beltless carcasses are built on relatively low diameter cylindrical drums and are then, either at the carcass building station or at a different station, first shaped into toroidal form on specially constructed radially expansible and axially collapsible drums before the belt and tread are applied. Representative ilustrations of the prior art 0° belted tire technology are set forth in U.S. Pat. Nos. 2,939,502 and No. 2,982,328. Two-stage tire building installations, however, are both complex and expensive, and their being put into general use would have entailed the intolerable economic burden of not only discarding single-stage building installations such as have heretofore been used for building beltless conventional tires completely in flat band or cylindrical form, but of effecting major modifications of the associated tire molds and presses as well.

As is known, methods of single-stage building (as herein defined) of belted tires have of late been proposed, but these have been directed toward the production of bias belted tires characterized by oblique orientations of the belt cords relative to the mid-circumferential plane. Representative illustrations of this technology are set forth in U.S. Pat. Nos. 3,486,546 and No. 3,558,389. In such methods, the belt cords are arranged in calendered cord fabric ply systems which are bias cut, and these are so applied to the carcass that the belt cords are oriented at relatively high angles to the mid-circumferential plane during the building operation and then, during the shaping of the tires in the press, pantograph down to somewhat lower angles to the mid-circumferential plane. Any such plies must, however, be spliced at their abutting or overlapped ends, which introduces a source of possible errors and defects into the tire structures. In the said U.S. Pat. No. 3,486,546, further, it has also been suggested that strechable cords be used in the belt plies in lieu of the conventional cords, each such cord being composed of one or more reinforcing yarns helically wrapped at a wide pitch about an elongated, precured, rubber core. In such a system, the ply splicing problem nevertheless remains, and the use of stretchable cords in the plies does not eliminate the pantographing thereof during the shaping operation. The elongation of such stretchable cords, of course, gives rise to yet another problem, in that a high degree of twist is imparted to the cords and the core is not only eliminated but remains confined between the cord turns. Moreover, in any bias belted tire, by virtue of the oblique belt cord orientations, the hoop modules of the tire in the circumferential direction is necessarily less than the maximum hoop modulus attainable with the cords oriented in the 0° direction, while at the same time the stress transfer in the shoulder regions of the tire is through rubber shear and falls off appreciably at the edges of the belt because of the cut ends of the belt cords. Thus, the performance of bias belted tires in such matters as broadened footprint, tread wear and road-holding ability tends not to be as good as that of 0° belted tires in these same areas.

It is an important object of the present invention, therefore, to provide novel and improved methods and means of building 0° belted tires entirely and economically on conventional single-stage building equipment.

More specifically, it is an important object of the present invention ot provide a novel high soft stretch reinforcing cord tape construction designed for use in building the belt-forming structures of 0° belted tires and capable of rendering feasible the single-stage building of such tires, i.e. the building of the belt-forming structure of a 0° belted tire while the carcass of the tire is still in its original or "as built" state.

It is also an important object of the present invention to provide a novel and improved 0° belted tire constructions in both the raw or as built and the shaped and cured states thereof.

Generally speaking, a high soft stretch tape according to the basic aspects of the present invention comprises a continuous, longitudinally extensible strand of one or more substantially inextensible cords each having formed therein a multiplicity of undulations which in any given straight length of the tape are substantially planar, the undulations preferably being of a generally sinusoidal nature. The term soft stretch is used herein to denote the ability of the tape to be longitudinally considerably extended by the straightening of its component cord or cords without the latter being stretched. The tape is made by passing the required number of individual cords, each of which may be untreated or may have a coating of rubber or latex or other rubber-adhesion promoting material pre-applied thereto, through an apparatus including an undulating and tying device by which they are both undulated and secured to each other in the desired relation, and means for controlling and synchronizing the cord feed rate into, and the tape feed rate out of, said device so as to ensure that the final tape has the desired stretch ratio (the ratio of straightened cord length to unextended tape length). The undulating and tying device preferably is a warp knitting mechanism or the like and is operated to knit a relatively weak and frangible cotton or like yarn or thread into a chain-stitch form while simultaneously therewith each cord to be included in the tape is being shuttled reciprocally across the needle path and laid into the stitches or loops of the yarn. The latter thus hold each cord in its undulating state, and where the tape includes a plurality of cords, more than one of these may also be tied to each other by the stitches. In a particularly preferred version of such a plural-cord tape, the cords are disposed side by side and laid into the stitches with the undulations of laterally adjacent cords in parallel planes and out of phase with each other. At the same time, to enhance the stability and integrity of the tape for purposes of handling, another relatively weak and frangible cotton or like thread or yarn is preferably also laid into and held by the stitches but in almost straight condition with only minimal undulation.

In accordance with a refinement of the present invention, each cord may also be provided with a multiplicity of longitudinally spaced locally weakened portions to enhance its ability to be stretched and elongated somewhat after being fully straightened out. The weakening of the cords, which may be effected mechanically, chemically, or otherwise, is preferably effected by a weakening device included in the apparatus so as to be traversed by the cords before they reach the undulating and tying device, and is carried out in such a manner as to leave them with a relatively low residual tensile strength, generally on the order of about 5 to 20% of their full tensile strength but nevertheless sufficient to permit the cords to be fed and processed through the undulating and tying device. For any given tire to be produced, the weakening interval, i.e. the cord length betwen successive weakened portions, is selected and preset to be different than, but not equal to a regular fraction or multiple of, the ultimately intended circumferential length of a full turn of the belt cord in the finished tire.

The apparatus, in addition to the components so far described, also includes, when a weakening device is present, means for phasing the cords entering the undulating and tying device in such a manner that when they have been fashioned into a tape, the weakened portions of each cord of that tape are out of lateral alignment with the respective weakened portions of each next adjacent cord. Where a final higher cord number tape is to be made of a plurality of lower cord number tapes, the apparatus further includes, in addition to the facilities for making as many low cord number tapes as are required, means for bringing the low cord number tapes together into side by side relation after they leave the undulating and tying device, and means for causing the tapes to adhere firmly to each other so as to create the final high cord number tape. If the cords are weakened, the apparatus will also include means for phasing the respective low cord number tapes as they leave the undulating and tying device in such a manner that when they are brought together, the weakened portions of the respective proximate or facing side cords of the tapes are out of lateral alignment with each other.

The specific nature, amplitudes and frequencies or pitch lengths of the undulations of the cords will, of course, be predetermined and controlled during the tape-forming operation to impart to the ultimate tape the required high soft stretch. In general, the degree of soft stretch, i.e. the stretch ratio, of the tape will depend on the extent to which, for any given tire, the belt-forming structure built up of such tape will have to expand radially from its building diameter to the final belt diameter. More particularly, the stretch ratio will then be no greater than,substantially equal to the expansion ratio of the tire, defined as the ratio of the diameter of the final belt in the shaped tire to the mean diameter of the belt-forming structure on the building drum (or, in other words, as the ratio of the circumferential length of one full turn of the belt cord in the shaped tire to the circumferential length of one full turn of the starting tape on the building drum). Nevertheless, although the stretch ratio may be less than the expansion ratio, it is contemplated by the present invention that it will be no smaller than the expansion ratio less the elastic strain capability of the cord in the case of an unweakened cord tape, and in the case of a weakened cord tape no smaller than the expansion ratio less approximately the capability of the cord to elongate by strain, by partial untwisting, and by ultimate rupture at the weakened positions. Merely by way of example, it is found that for most standard rim size belted passenger tires which are completely built in flat band form in a single-stage building operation prior to being shaped, a tape having a stretch ratio of between about 1.5 and 1.9 (50% and 90%) gives satisfactory results, but it will be understood that for certain types of tires the building operation may dictate the use of tape with a stretch ratio in the neighborhood of as little as about 1.2 (20%) , while for other types the stretch ratio may

have to be in the neighborhood of as much as about 4 (400%).

In the building of a raw or uncured 0° belted tire according to the present invention, after the necessary beads, carcass plies and other conventional tire components have been assembled on the usual low diameter drum, the belt-forming structure is built up (either on the same drum or on another one of the same diameter and either at the same station or at a different one if the carcass is being built at one place and the belt and tread rubber are to be added another) by winding an appropriate amount of high soft stretch tape helically about the medial region of the still as built, e.g. cylindrical or flat band, carcass at an angle of substantially 90° to a plane including the axis of the carcass, i.e. at an angle of substantially 0° to a plane perpendicular to the said axis. The tape is preferably wound so as to dispose the undualtions thereof on end relative to the carcass, i.e., in plane generally normal to the surface of the carcass or the drum surface. It will be understood that the tape, once properly deposited on the carcass, will not twist or shift out of its wound-on position, and the use of a tape or plural-cord width will enable a relatively large number of cords to be applied with each turn of the tape.

The winding operation may be either unidirectional or bidirectional with reference to the axis of the building drum and is continued until the tape-constituted belt-forming structure extends over the desired width of the medial region of the carcass. The rubber tread and sidewall stocks as well as any other still missing tire components are then applied to the carcass, with any tread splices being stitched under conditions ensuring that no undesired bunching of the belt cord tape turns will occur. Thereupon, the raw or "green" tire in its as built form is removed from the building drum and is ready to be subjected to the final shaping and curing operations.

When a so-built 0° raw tire is radially expanded and axially contracted into its final toroidal shape (either in the press or prior to its being put thereinto), the belt-forming structure defined by the wound-on tape is subjected to the same type of radial expansion. This almost at once causes the weak stabilizing and stitching threads or yarns to be broken, which then, insofar as is presently discernible, play no further part in the process or the tire (albeit remaining in the latter). Thereupon, as the expansion of the tire continues, the cords lose their undulations and are ultimately completely straightened out to define the belt.

In this combination it should be noted that whether the tire is to be cured in a segmented mold, in which case the belt expansion will be substantially completed before the mold is closed, or whether the tire is to be cured in a standard, unsegmented mold, in which case a small further expansion may take place after the mold is closed, the tape used may have a soft stretch or stretch ratio as nearly as possible exactly equal to that actually required for the full expansion. Preferably, however, the tape used will normally have a stretch ratio somewhat less than the full expansion ratio, say between about 1 and 3 percent less, so that the cords become fully straigtened and the undulations disappear therefrom shortly before the shaping operation is completed. In such a case, of course, during the final expansion of the tire, e.g. upon the forcing of the tire against the mold surfaces under high internal pressure after the mold is closed, the belt cords will be subjected to fairly high tensile stresses and will stretch and elongate to the extent required. Where the cords, by virtue of their construction and the stress-strain characteristics of the cord material, can accommodate the resultant strain and elongation without exceeding their elastic limit, the fact that they are weakened will not lead to any problems. Where the cords are locally weakened, on the other hand, they will additionally have an increased ability to undergo a "hard stretch" without adverse effect, i.e., they will be able to elongate either by the strain of the cord material, or by being able to untwist somewhat between the weakened portions, or by actually breaking at one or more of the locations of the various weakened portions thereof, or by a combination of these characteristics. The weakening of the cords of the tape at a multiplicity of longitudinally spaced points as described thus can be seen to provide a margin of safety, due to the presence of which a possible choice of a tape stretch ratio lower than ordinary relative to the tire expansion ratio can be tolerated and compensated for.

When a tape of multiple side by side cords wound "on end" is used to build the 0° belt-forming structure, the latter can be built with appreciably reduced expenditures of time and labor and the resultant belt is a plural-wind structure with the various cords in a multiple lead screw thread-like arrangement. The formation of the ultimate 0° belt is, furthermore, effected without the kind of pantographing cord movement which characterizes the known bias belted tire manufacturing operations, even though the final belt diameter in the mold is considerably greater than the starting mean diameter of the beltforming structure on the drum. At the same time, the final belt is devoid of splices, the absence of which leads to a greater degree of uniformity and dynamic balance in the finished tire. The belt is also devoid of circumferentially contiguous, obliquely laterally directed, cut cord ends in the shoulder regions of the tire, which would be inevitably present in any tire utilizing bias belts constituted by one or more biascut fabric plies circumferentially laid about the carcass and could become a source of weakness, e.g. ply separation. Moreover, the 0° belt leads to another advantage, i.e. a maximized hoop modulus of the tire in the circumferential direction relative to the hoop modulus which a tire utilizing a bias belt would have.

It is also to be noted that where the cords of the tape constituting the belt-forming structure are locally weakened, the strength and function of the final belt in the tire are nevertheless not impaired, since the weakened portions (and breaks, if any) in adjacent cords are staggered around the circumference of the tire and are not disposed laterally adjacent one another due to their having been phased relative to each other when the tape was made. Each weakened cord portion in the belt is, in fact, laterally confined between a relatively large number of fullstrength cord sections, so that there is no continuous line of weakness created in the belt in the axial direction of the tire, i.e. transversely of the tread, and there is no appreciable diminution of stress transfer between the rubber of the tread and the belt cords. This will be true whether or not any of the cords are broken and even if all the cords are broken at all the weakened portions thereof.

The foregoing and other objects, characteristics and advantages of the present invention will be more

clearly understood from the following detailed description of various aspects and facets thereof when read in conjunction with the accompanying drawings, in which:

FIG. 1 is a fragmentary elevational view, partly in section, of a high soft stretch tape according to the basic principles of the present invention and composed of a single rubber-coated cord with planar undulations, the cord being held in the undulating state by a frangible chain stitch knitted yarn;

FIG. 1*a* is a sectional view, on an enlarged scale, taken along the line 1a—1a in FIG. 1;

FIG. 2 is a fragmentary elevational view, partly in section, of a similar but two-cord high soft stretch tape, with the respective sets of undulations being disposed in parallel, side by side planes and out of phase with each other;

FIG. 3 is a fragmentary, diagrammatic, perspective view of a three-cord high soft stretch tape similar to that shown in FIG. 2;

FIGS. 3*a* and 3*b* are sectional views, on enlarged scales, taken along the lines 3*a*—3*a* and 3*b*—3*b*, respectively, in FIG. 3;

FIGS. 4 and 5 are fragmentary, diagrammatic, perspective views, respectively, of six-cord and ninecord high soft stretch tapes each made of an appropriate number of laterally joined three-cord tapes of the type shown in FIG. 3;

FIGS. 4*a* and 5*a* are sectional views, on an enlarged scale, taken along the lines 4*a*—4*a* and 5*a*—5*a*, respectively, in FIGS. 4 and 5;

FIG. 6 is a fragmentary elevational view, partly in section, of a one-cord wide high soft stretch tape formed of two cords having their respective undulations disposed in a single common plane and in nesting relation to each other;

FIG. 7 is a sectional view, on an enlarged scale, taken along the line 7—7 in FIG. 6;

FIG. 8 is a fragmentary elevational view of a five-cord wide high soft stretch tape formed of five side by side nested-cord tapes of the type shown in FIGS. 6 and 7;

FIG. 9 is a sectional view, on an enlarged scale, taken along the line 9—9 in FIG. 8;

FIG. 10 is a fragmentary, diagrammatic, elevational view of a one-cord wide high soft stretch tape formed of four mutually nested coplanar cords held in their undulating state by a strip of frangible sheet material;

FIG. 11 is a sectional view, on an enlarged scale, taken along the line 11—11 in FIG. 10;

FIG. 12 is a sectional view, on an enlarged scale, taken along the line 12—12 in FIG. 10 but shows a five-cord wide tape of nested-cord tapes of the type shown in FIG. 11;

FIGS. 13 and 14 are fragmentary, diagrammatic, plan views, the latter partly broken away, of a raw 0° belted tire according to the present invention in an intermediate state and in the final state of the building thereof, respectively, the 0° belt-forming structure being illustrated as constituted by a helically on end wound six-cord tape of the type shown in FIGS. 4 and 4*a*;

FIG. 15 is a fragmentary, partly sectional, perspective view of a 0° belted tire having a monoply belt and produced from a single-stage built raw tire including a belt-forming structure made of on end wound tape such as those shown in FIGS. 1 to 5;

FIGS. 16 and 17 are fragmentary axial sectional views of the crown regions of single-stage built 0° belted tires similar to that shown in FIG. 15 but including, respectively, a two-ply belt resulting from a belt-forming structure made of one end wound tape such as those shown in FIGS. 6 to 9, and a four-ply belt resulting from a belt-forming structure made of on end wound tape such as those shown in FIGS. 10 and 12;

FIG. 18 is a fragmentary, diagrammatic illustration, in perspective but not drawn to scale, of a monoply six-cord plural-wind 0° belt the starting high soft stretch tape of which utilized locally weakened cords according to one of the embodiments of the present invention, the belt being shown in full circumferential extent and as it would be after the radial expansion of the raw tire to illustrate a preferred distribution of the weakened portions of the various cords;

FIG. 18*a* is a graphic representation of a developed plan view of slightly more than two full turns of the belt shown in FIG. 18 and illustrates the staggering of the weakened cord portions across the width of the six-cord winding entity;

FIG. 19 is a schematic illustration of the basic methods of making high soft stretch tapes according to the present invention;

FIG. 20 is a fragmentary, partly diagrammatic, perspective illustration of an apparatus designed for the practice of one variant of the tape-forming methods represented in FIG. 19;

FIG. 21 is a fragmentary perspective illustration, on an enlarged scale, of one type of weakening device which can be utilized in the apparatus shown in FIG. 20 for locally deteriorating and weakening the cords being formed into tape;

FIGS. 22 and 22*a* are fragmentary sectional views, on an enlarged scale, taken along the line 22—22 in FIG. 21 and illustrate the weakening device in different stages of operation;

FIG. 23 is a fragmentary elevational view, partly in section, of a weakened cord emanating from the device shown in FIG. 21;

FIG. 24 is a fragmentary perspective view, on an enlarged scale, of an undulating and tying device which can be utilized in the apparatus shown in FIG. 20 for undulating the starting code and securing them to each other in that state to form the desired tapes;

FIG. 24*a* is a graphic representation of the relative motions of the various tape-forming cords and the stabilizing yarn in the device shown in FIG. 24;

FIG. 25 is a fragmentary perspective view, on an enlarged scale, of a joining device utilized in the apparatus shown in FIG. 20 for combining two lower cord number tapes into one higher cord number tape;

FIG. 26 is a sectional view, on an enlarged scale, taken along line 26—26 of FIG. 25; and

FIG. 27 is a sectional view, on an enlarged scale, taken along the line 27—27 in FIG. 26.

Referring now to the drawings in greater detail, FIG. 1 shows a high soft stretch tape 1 according to one aspect of the present invention, the tape being constituted by a single, undulating cord 2 shown, merely by way of example, as being composed of a substantially inextensible filamentary cord member 3 encased in an outer covering or sheath 3′ of rubber. Most advantageously, the cord is held in its undulating state by a series of loops or stitches of a relatively weak thread or yarn 4, hereinafter referred to as the stitching yarn or

thread, with the line of stitches extending along the longitudinal center line or axis of symmetry of the series of undulations. Preferably, the loops of the stitching yarn, which are illustrated in greatly exaggerated fashion in FIG. 1*a*, are shown as being parts of a single chain of stitches one wale wide formed by warp knitting the yarn with a single needle and guide bar in a 1-0/0-1 movement, the yarn being continuously lapped around the needle and the cord being laid into the loops by being shuttled back and forth across the needle path. In actuality, of course, the loops of the stitching yarn will be tighter than as shown in FIG. 1*a*, to such an extent as to bite somewhat into the rubber coating 3'.

It should be noted that the term "relatively weak" as used in the foregoing context is intended to denote any thread or yarn which is made to have the strength to withstand moderate tensile forces such as might be encountered in normal handling of the tape, and yet is made to be easily frangible so as not to interfere with the straightening of the cord when the tape is subjected to relatively high forces such as might be encountered during the radial expansion and shaping of a new tire in which the tape, helically wound circumferentially about the medial region of the tire carcass, constitutes the belt-forming structure. Ordinarily, therefore, the stitching yarn will be a conventional spun staple fiber yarn or thread of cotton, rayon or the like.

The undulations of the cord 2, as shown in FIGS. 1 and 1*a*, which are substantially planar in any given straight length of the tape, are generally sinusoidal, i.e. they have a configuration approximating that of a regular sine wave, but within the ambit of the present invention they may have any other type of analogously repeating substantially planar configuration, e.g. that of a square wave, a series of loops, etc., if desired. The soft stretch of stretch ratio of the tape is, of course, determined by the magnitude of the undulations imparted to the cord, and for any given case the particular magnitude selected will, subject to the hereinbefore described variations, depend on the degree of radial expansion or increase in circumferential dimension which the helical belt-forming structure in the tire will undergo when the latter is transformed from its as built shape to its toroidal shape. Merely by way of example, to impart a stretch ratio in the range of about 1.5 to 1.9 to a tape composed of rubber-coated rayon cord about one-sixteenth inch in diameter, the cord may be undulated to a peak to peak amplitude of about three-sixteenth inch and a pitch length of about five-sixteenth inch.

FIG. 2 shows a similar high soft stretch tape 1*a* which is composed of two generally sinusoidally undulating, individually rubber-coated cords 2. The respective sets of undulations of the cords are shown as being parallel to and out of phase with each other, and the cords are held in their undulating states and tied to each other by a relatively weak stitching yarn 4 knitted in the same manner as described above in connection with the one-cord tape 1, with the two cords being laid into the yarn stitches so that each loop embraces both cords at their region of intersection. (The actual arrangement in cross-section is not explicitly shown but can be readily visualized from the one-cord arrangement illustrated in FIG. 1*a*.)

In like manner, a three-cord tape 1*b* is shown in FIGS. 3, 3*a* and 3*b*, with the two outer cords 2 having their undulations out of phase with those of the middle cord, and all cords being laid into the stitches of the yarn 4 during the knitting thereof as previously described, so that each loop embraces all three cords at their region of intersection. It should again be kept in mind that the exaggerated representation of the tape 1*b* in FIG. 3*b* is rather idealized for the sake of clarity. In actuality, as in the case of the tape 1*a*, the stitching yarn loops will be tight enough to bite into the rubber coatings 3' of the two outer cords, as indicated in FIG. 3*a*, and to exert sufficient lateral forces on the portions of the cords embraced in and tied together by each stitch to squash or compact the cords somewhat. This, of course, will not effect any material change in the general parallelism and side by side relationship between the cords.

For ease of manufacture, it is preferred that the undulations of the side by side adjacent cords in any such plural-cord tape be longitudinally offset with respect to each other, most preferably in a 180° out of phase relationship as shown for the sine wave undulations in FIGS. 2 and 3 (FIG. 2 thus may be considered in effect as being a representation of all plural-cord tapes with 180° out of phase generally sinusoidal undulations when viewed in side elevation). Nevertheless, the undulations of such side by side adjacent cords in any given plural-cord type may just as well be in lateral alignment, i.e. in phase, with each other (any such tape when viewed in side elevation would have the same appearance as the tape 1 in FIG. 1), inasmuch as the disposition and functional interrelationships of the cords once they have been straightened out are entirely independent of the original locations of the undulations. In tapes of plural side by side cords with in phase undulations, the joining of the cords to each other may be achieved by other types of relatively weak means than stitching yarns or threads, such as by suitable rubber cements, thermoplastic rubber compositions, etc.

The constructions of plural-cord tapes including even greater numbers of side by side cords (not shown), i.e. four, five, six, etc., tied together into a single matrix by one stitching yarn will be readily apparent to those skilled in the art from the foregoing description. It has been found, however, that tape production and handling requirements tend to place a practical upper limit of about four or five cords on such tapes. To this end, it is contemplated by the present invention that high soft-stretch plural-cord tapes of relatively higher numbers of component cords may be made of a plurality of tapes of lesser cord numbers, with the latter tapes being cemented or otherwise adhered to each other in side by side relation. Merely by way of example, there is shown in FIGS. 4 and 4*a* a six-cord tape 1*c* composed of two three-cord tapes 1*b* (FIGS. 3, 3*a* and 3*b*) cemented to one another in side by side relation, with both the lower number tapes being longitudinally so offset relative to each other as to cause the undulations of the respective adjoining side cords to be out of phase with each other. Similarly, FIGS. 5 and 5*a* show a nine-cord tape 1*d* built up in a similar manner of three three-cord tapes 1*b*. The possible variants of this type of construction will, of course, also be readily apparent; thus, the six-cord tape 1*c* could, for example, be made of three two-cord tapes 1*a*, and, for that matter, any plural-cord tape could be made of any appropriate number of tapes having lower numbers of cords, even, for example, of one-cord tapes 1.

In accordance with yet another aspect of the present invention, it is further found advantageous to incorporate in any high soft stretch tape utilizing a relatively weak stitching yarn as the tying means, an additional relatively weak thread or yarn, such as is indicated schematically at **6** in FIG. **1***a* for the one-cord tape **1** and in FIGS. **3**, **3***a* and **3***b* for the three-cord tape **1***b*. For the sake of clarity, no such yarn **6** has been shown in FIGS. **1** and **2**. The yarn **6** is preferably of the same type and physical properties as the stitching yarn **4** but is laid into the stitches or loops of the latter in the same manner as the cords **2** themselves except with only a very small degree of waviness (in a plane parallel to those of the undulations of the cords) and while being maintained under a relatively high tension equal to about 70–80 percent of its full tensile strength. The yarn **6** thus enhances the integrity of the tape and serves as a means for stablizing the tape against premature stretching thereof and a consequent undesired straightening of the cords during handling, thereby enabling the tape to be kept under the proper degree of tension without any risk of the stitching yarn opening up or breaking either while the tape is being drawn onto a take-up roll from the tape-forming apparatus or while the tape is being drawn from such a roll for the belt-building operation. By virtue of the method of its formation, therefore, the six-cord tape **1***c* (FIGS. **4** and **4***a*) has two stabilizing yarns **6** incorporated therein, while for the same reason the nine-cord tape **1***d* (FIGS. **5** and **5***a*) has three stabilizing yarns **6** incorporated therein.

The present invention also contemplates the provision of high soft stretch plural-cord tapes characterized by the presence of generally sinusoidally undulating cords arranged in nesting relation with each other and secured together by a relatively weak tying means. Merely by way of example, FIGS. **6** and **7** show a tape **1***e* composed of two cords **2** each composed of a cord member **3** and a rubber coating **3'**, the two cords being arranged in nesting relation, i.e. with each two interfitted undulations disposed in a single plane. In this embodiment, the cords are again shown as being held together in their undulating state by a relatively weak stitching yarn **4** the loops of which (not shown in plan) are formed in the same manner as described hereinbefore in connection with FIGS. **1***a* and **3***b*. (The tape **1***e* thus, although a two-cord tape, is only one cord wide, and the actual arrangement can be visualized by imagining the presence of two longitudinally, i.e. right/left, adjacent sectioned cord portions confined in each loop shown in FIG. **1***a*.) Similarly, FIGS. **8** and **9** show a five cord wide tape **1***f* composed of five such one cord wide dual-cord components **1***e* cemented to each other in side by side relation and arranged with their undulations out of phase with each other. It will be understood, of course, that any nested-cord tape more than one cord wide can also be formed as a unit, by jointly undulating the respective pairs of cords and so laying them into the loops of a common stitching yarn in the same manner as described above for the cords of the tape **1***b* (for example, the actual arrangement for a three cord wide nested-cord tape, not shown, can be visualized by imagining the presence of three pairs of longitudinally, i.e. right/left, adjacent sectioned cord portions confined in each loop shown in FIG. **3***b*).

The nested-cord principles outlined above may also be applied to greater numbers of cords than two. Thus, FIGS. **10** and **11** show a one cord wide high soft-stretch tape **1***g* composed of four generally sinusoidally undulating cords **2'** arranged in nesting relation, i.e. with each four interfitted undulations disposed in a single plane. In this embodiment, the cords are illustrated as being devoid of a rubber covering (they may, for example, be either untreated or treated in any of the ways hereinbefore referred to) and are shown as being held in their undulating state by means of a relatively weak and easily frangible strip **5** of a thin gauzelike fabric or like sheet material to which they are secured by means of parallel rows of sewn stitches **4'** of a relatively weak cotton or like thread or yarn. The width of the strip **5** preferably will be appreciably less than the outside peak to outside peak dimension of the tape, as shown. The cords may, of course, be adhered to the strip in other ways than by sewing, as by means of a suitable cement or adhesive. This latter approach is actually to be preferred where rubber-covered cords **2** are used in the tape, since the rubber would normally tend to foul the sewing needles in short order and prevent the stitching operation from being properly carried out. As illustrated by FIG. **12**, furthermore, a nested-cord tape **1***h* more than one cord wide and composed of a number of the tapes **1***g* of FIGS. **10** and **11** can be readily constructed simply by adhering a plurality of such tapes to each other in side by side relation and with the planes of the respective laterally adjacent sets of undulations substantially parallel to one another (it should be kept in mind, in this connection, that FIG. **12** is a somewhat idealized representation of the tape **1***h*, but although in actual practice its form may not be as precise as shown, the indicated basic relationships between the tape components will be present at all times). The undulations of each cord may, concomitantly, be either out of phase with the undulations of each next adjacent cord, as shown, or in phase therewith (not shown).

It will, of course, be readily appreciated by those skilled in the art that when tape such as those illustrated in FIGS. **1** to **5** is used in an on end wound system to build a belt-forming structure of a raw tire, it will ordinarily produce a monoply belt in the finished tire. On the other hand, when a tape such as those illustrated in FIGS. **6** to **12** is used in an on end wound system, it will produce a multiply belt in the finished tire, without, however, requiring more than one layer of tape. More detailed reference to these aspects of the invention will be had hereinafter as the description proceeds.

All of the foregoing high soft stretch tape constructions, it will further be appreciated, may utilize either cords which are unweakened or cords which are locally weakened or deteriorated in any suitable manner at a multiplicity of longitudinally spaced locations, as indicated schematically at **3''** in FIG. **23** for a cord **2**, to a residual tensile strength between about 5 and 20 percent of their starting tensile strength. Wherever weakened cords are used, however, the cords of any given tape will be combined so that the weakened portions of each cord are laterally out of alignment with the weakened portions of at least each next adjacent cord and preferably also with the weakened portions of all the cords of the same tape across the entire width thereof. Further reference to these and related aspects of the present invention will also be had hereinafter as the description proceeds.

To illustrate the basic and presently considered best method of forming high soft stretch tapes of plural cords in side by side, parallel plane relation according to the present invention, there will now be described the formation of one such tape construction, to wit a six-cord tape such as 1*c* (FIGS. 4 and 4*a*) from two three-cord tapes such as 1*b* (FIGS. 3, 3*a* and 3*b*) of locally weakened rubber-covered cords 2 (the description will, of course, apply to otherwise treated cords and even untreated cords as well). It is to be noted that although the methods and apparatus for making such tape are herein disclosed in full for purposes of completeness, they actually are the invention of J. J. Neville and D. Shichman and are disclosed and claimed in a copending application Ser. No. 160,669 filed July 8, 1971, now U.S. Pat. No. 3,774,662 issued Nov. 27, 1973, entitled "Production of High Soft Stretch Tapes of Reinforcing Cords for Molded Elastomeric Articles" filed of even date herewith and assigned to the same assignee as the instant application.

Referring now in particular to FIG. 19, in the tape-forming operation for this construction, the starting six cords 2, which may be considered as being in two sets of three cords each, are taken from a creel-mounted set of supply spools 7. The cords are brought into parallel side by side relation by suitable guides 8 and 9, and then moved along parallel paths of travel straddled by and extending through an intermittently activated weakening device 10 where they are periodically jointly subjected to an appropriate deterioration or weakening action. The weakening of the cords may be achieved either by physical means (omechanical, electrical, thermal, etc.) or by chemical means (acid treatment, saponification, plasticization, etc.). It will be understood, of course, that not all types of cords, depending in general on the cord construction and/or the nature of the cord material, will be able to be weakened in the same manner. Basically, however, the weakening interval, i.e. the cord length between successive weakened portions for each cord of any intended tape construction, is selected to be different than, and in particular to be either an irregular fraction or an irregular multiple of, the circumferential length of one full turn of the cord in the final belt of the ultimate tire. This will ensure a non-alignment of the weakened cord portions of the belt in the axial direction of the tire, i.e. transversely of the tread, at least in successive turns of the cord.

From the device 10, the cord paths lead coextensively around a continuously driven metering roll 11 to an idler roll 12. The metering roll 11, the operation of which is synchronized with that of the weakening device 10, has a roughened or otherwise high friction exterior surface and provides the force for drawing the cords at the desired feed rate and in a slip-free manner from the supply spools 7. The paths of the three cords of each set then diverge, in the manner indicated by the reference characters 2*a*–2*b*–2*c* and 2*a*'–2*b*'–2*c*', so that the first cords travel from the roll 12 directly to a pair of guide rolls 13, while the second and third cords travel over respective phasing rolls 14 and 15 from which they converge again to come together with the first cords at the guide rolls 13. From the latter, all the cords travel jointly to an idler roll 16 located at the entrance to an undulating and tying device 17. In this way, it will be understood, the length of the path of travel of each cord of each set of three from the roll 12 to the roll 16 is varied and adjusted relative to the length of the corresponding path traveled by each of the other cords of the same set, so that when each respective three cords reach the device 17, their originally simultaneously formed and laterally aligned weakened portions are no longer in lateral alignment with each other but are longitudinally displaced or offset with respect to each other. Concurrently therewith, two stitching yarns 4 and two stabilizing yarns 6, each of the latter tensioned to about 70–80 percent of its tensile strength, are fed to the device 17 from respective supply spools thereof (not shown).

In the device 17, which for this tape construction includes a warp knitting mechanism to be described in greater detail hereinafter, while two knitting needles and a pair of associated threaders are operated to knit the respective relatively weak stitching yarns 4 into two separate one wale wide chains of loops such as are shown in FIG. 3*b*, the three cords of each set and the associated stabilizing yarn 6 are fed individually to the location of a respective knitting needle and are jointly shuttled reciprocally thereacross, i.e. transversely of the direction of needle movement, in predetermined phased relationship to each other. With the rate of feed of the cords properly controlled, therefore, in a manner which will become clear presently, each three cords and the stabilizing yarn therefor are laid in a generally sinusoidally undulating form, of appropriately large amplitude in the case of the cords, and in side by side relation with each other across the path of movement of the associated needle and into the respective loops formed thereby, so as to be embraced at their cross-over portions by the stitching yarn and thus secured and locked together into a three cord tape 18. The amplitude of the shuttling movement of the stabilizing yarn is, at the same time, very limited, so that in the final tape the stabilizing yarn is almost straight and provides the integrity, i.e. resistance to premature elongation, needed to permit further handling and processing of the tape without any diminution of its prescribed stretch ratio. Preferably, the cord shuttling is so carried out that the undulations of each cord of each tape are 180° out of phase or lateral alignment with the undulations of each next adjacent cord.

The two three-cord tapes 18 so formed are drawn away from the undulating and tying device 17 by a second continuously driven metering roll 19 disposed intermediate a pair of idler rolls 20 and 20' over which the tape is passed. The metering roll 19, like the roll 11, has a high friction exterior surface to provide for a slip-free drawing of the tapes 18 from the device 17, and its operation is synchronized with that of the metering roll 11 and the device 17. The system thus enables the amplitudes of the undulations and thereby the stretch ratio or soft stretch of each of the three-cord tapes 18 to be accurately controlled. From the idler roll 20', the paths of travel of the two three-cord tapes first diverge and then reconverge, in the manner indicated by the reference characters 18*a* and 18*b*, one tape traveling over a phasing roll 21 and thence to an idler roll 22, and the other tape traveling directly to the roll 22. In this way, the length of the path of travel of one of the three-cord tapes is varied and adjusted relative to the length of the path of travel of the other, so that when the tapes come together again at the roll 22, the two sets of staggered weakened portions are no longer in lateral alignment

with each other but are longitudinally displaced or offset with respect to each other.

From the roll **22**, the paths of travel of the two tapes **18** go under a guide roll **23** and then are straddled by and extend through a joining device **24** where a liquid cement or adhesive compatible with the rubber covering **3'** of the cords is applied to the facing sides of the tapes and the latter are squeezed together and caused to adhere to each other to form a six-cord tape **25**. The latter is then wound onto a suitable driven take-up spool or roll **26**, its path of travel extending through and being straddled by a tensioning device **27** which is operable to control the driving of the take-up roll **26** so as to maintain the tape under a controlled tension.

A representative form of an apparatus A designed for the practice of the method of making such a six-cord tape is illustrated in FIG. **20**. The apparatus, which for the sake of clarity is shown without its framework and without any indication of the passage of the cords, yarns and tapes therethrough, includes (see also FIG. **19**) a common drive means **28** for all the synchronized components thereof, i.e. the weakening device **10**, the metering rolls **11** and **19**, the undulating and tying device **17** and the joining device **24**, and a secondary drive means **29** for the take-up roll **26**. The main drive means comprises an electric motor **38** driving a sprocket **39** which is connected by a chain **40** to a sprocket **41**. The latter is connected via a clutch **42** to a main drive shaft **43** which carries a bevel gear **44** that is in meshing engagement with a bevel gear **45** mounted on a transverse auxiliary drive shaft **46**.

The shaft **46** carries a sprocket **47** which is connected by a chain **48** to a sprocket **49** mounted on a shaft **49a** connected via an adjustable reducing mechanism **50** to a shaft **51***a* carrying a large spur gear **51**. The latter is in mesh with another spur gear **52** mounted on the shaft **53** of the metering roll **11**. The shaft **53** further carries a smaller spur gear **54** which is in mesh with another spur gear **55** drivingly connected to an intermittently actuatable control switch mechanism **56**, e.g. a cam-actuatable solenoid switch, operatively connected, as indicated schematically by the line **57**, to the control or operating system **58** of the weakening device **10**. It will be apparent, therefore, that the drive train so far described is operable to rotate the metering roll **11** at any desired preselected speed for the purpose of controlling the feed rate of the starting cords through the weakening device and into the undulating and tying device, and concurrently to cause the weakening device to be repeatedly activated at time intervals corresponding to the passage of predetermined lengths of the cords through said device.

The shaft **53** still further carries a sprocket **59** connected by a chain **60** to a sprocket **61** mounted on a shaft **62**. Also mounted on the latter is a spur gear **63** which is drivingly connected via a pinion **64** with another spur gear **65** mounted on the shaft **66** of the metering roll **19**. The shaft **66** further carries a sprocket **67** connected by a chain **68** to a sprocket **69** mounted on the shaft **70** of the guide roll **23**. A spur gear **71** also carried by the shaft **70** is in mesh with another spur gear **72** mounted on a shaft **73** coaxially with a sprocket **74** which is connected by a chain **75** with a sprocket **76** constituting the driving element of the joining device **24**. It will be apparent, therefore, that the drive train just described is operable to rotate the metering roll **19** at any desired preselected speed for the purpose of controlling the feed rate of the finished three-cord tapes out of the undulating and tying device **17**, and that the setting of the speed of the roll **19** relative to that of the metering roll **11** controls the stretch ratio or soft stretch imparted to the three-cord tapes. Concurrently, the said drive train serves to operate certain rotary elements of the joining device **24** during the uniting of the two tapes into the final six-cord tape form.

The secondary drive means **29** comprises an electric motor **77** driving a sprocket **78** which is connected by a chain **79** to a sprocket **80** secured to a shaft **80a** adapted to support the take-up roll or spool **26**. The motor **77**, which also drives (in a manner not shown) a reciprocating traversing guide **81** through the intermediary of a ratchet shaft **81***a*, is electrically tied in (in a manner not shown) with the motor **38** so as to be de-energized and bring the take-up operation to a halt whenever the operation of the motor **38**, and thus the tape formation, is interrupted for any reason. The motor **77** is, however, also arranged to be independently stopped and started by the operation of the tension control device **27**. Merely by way of example, the latter is shown as comprising a pair of upper, coplanar idler rollers **82** and **83** journaled on spaced, parallel axes, and an intermediate, lower gravity or floating tensioning roller **84** coplanar with the rollers **82** and **83** and journaled in a bushing **85** mounted for vertical sliding movement along an upright rod **86**. The arrangement is such that the finished tape leaving the joining device **24** is passed in sequence over the roller **82**, under the roller **84** and over the roller **83**. The roller **84** thus is effectively supported by the festooned tape. At a pair of vertically spaced points along the path of travel of, and in position to be activated by, the roller **84** or an adjunct thereof are provided two limit switches **87** and **88** which are connected into the circuit of the motor **77** in a manner not explicitly shown but indicated schematically by the lines **89** and **90**, the switch **87** being operable to stop the motor **77** when the roller **84** reaches the upper limit of its travel, and the switch **88** being operable to start the motor **77** when the roller **84** reaches the bottom limit of its travel.

It will be understood, therefore, that before the winding of a finished tape **25** onto the take-up roll **26** can be begun, the festoon of the tape will have to be long enough to dispose the tensioning roller **84** at the bottom end of its vertical travel path. With the motor **77** thus started, the tape is drawn out of the tension control device **27** at a slightly faster linear speed than the speed at which it is being fed thereinto from the joining device **24**. Consequently, as the tape is wound onto the roll **26**, the festoon of the tape between the rollers **82** and **83** starts to become shorter. If this were to continue unchecked, the tension on the tape would begin to vary significantly, i.e. to increase rapidly and continuously, as soon as the festoon had completely disappeared, which would be highly inimical to the ultimate production of uniform tires. This potential defect is avoided by the fact that well before the festoon of the tape can disappear, the tensioning roller **84** riding up in the rising bottom end of the festoon reaches the switch **87** and activates the same to stop the motor **77** and the take-up operation. Since more tape is continually being produced, however, the festoon then again begins to lengthen, which continues until the now downwardly traveling tensioning roller reaches the switch **88** and activates the same to restart the motor

77. In this manner, the tension in the tape at all times is accurately controlled to remain between prescribed acceptable limits.

Referring now to FIG. 21, the weakening device 10 of the apparatus A is shown as being a nicking mechanism which is constructed in the form of a press-like structure comprising a rigid base or framework 91 supporting a stationary lower platen 92 and a plurality of vertical guide rods 93 (only one is shown) which slidably support an upper platen 94 through the intermediary of sleeves 95 fixed to the latter. The upper platen is connected with the head 96 of a push rod 97 of a pressing mechanism (not shown) which is operated by the control system 58 (FIG. 20) under the action of the switch 56 to move the platen 94 up or down as required. The lower or base platen 92 rigidly supports an anvil structure 98 including a pair of abutment blocks 99 of identical height disposed on opposite sides of the path of movement of the cords 2, and a cutting block 100 vertically adjustably disposed between the abutment blocks, the cutting block being tapered to provide an uppermost relatively narrow edge (see also FIG. 22) which is disposed at a level somewhat below the top plane of the abutment blocks, the difference in height necessarily being less, of course, than the thickness of the cords to be weakened. Correspondingly, the upper platen 94 rigidly supports a striker member 101 the downwardly facing surface of which is entirely flat and parallel to the common plane of the upper surfaces of the abutment blocks 99.

It will be clear, therefore, that in operation, when the press is closed by the upper platen being moved down to bring the striker 101 against the abutment blocks 99, the cords will be forced against the cutting block 100 (see FIG. 22*a*) and will be bruised or nicked thereby, to the extent determined by the adjusted setting of the cutting block, to produce desired local deteriorations or weakenings 3'' (FIG. 23). As already mentioned, this setting should preferably be such as to leave the cords with a residual tensile strength sufficient, i.e. not less than on the order of about 5 to 20 percent of their full tensile strength, to enable the cords to be drawn into and processed in the undulating and tying device 17.

Referring now to FIG. 24, the undulating and tying device 17 of the apparatus A is a warp knitting mechanism adapted to knit a pair of stitching yarns 4 into two disconnected chains of loops each one wale wide, with the cords 2 and the stabilizing yarns 6 laid into the stitches. This mechanism includes (see also FIG. 20) a needle bar 102 carrying a pair of bearded knitting needles 103, one for each of the three-cord tapes to be formed, and an opposed single front guide bar 104 carrying a corresponding pair of threaders 105 to which the stitching yarns 4 are fed via suitable guide rollers 105a. The needle bar is connected at its rear edge with one end of a pusher rod 106 (FIG. 20) which in turn is connected at its other end with an eccentric 107 mounted on the auxiliary drive shaft 46, whereby the needle bar 102 is reciprocated toward and away from the front guide bar 104, as indicated by the double-headed arrow E (FIG. 24), whenever the motor 38 is running and the clutch 42 engaged. The front guide bar 104 is mounted on a rocker shaft 108 adapted to be reciprocally moved angularly about its axis and laterally linearly along its axis, as indicated by the doubleheaded arrows F and G (FIG. 24), thereby to enable the threaders 105 to perform their lapping movements relative to the needles 103. The rocking movements of the front guide bar are effected by means of a pair of link arms (not shown) each articulated at one end to a respective adjunct 109 of the rocker shaft 108 and at its other end to a corresponding eccentric (not shown) mounted on the drive shaft 46, while the lateral movements of the front guide bar are effected by means of an eccentric 110 also driven (in a manner not explicitly illustrated) by the shaft 46.

The undulating means of the knitting mechanism includes four transverse back guide bars 111, 112, 113 and 114 which are mounted for axial reciprocal movements, as indicated by the double-headed arrows H. Adjustably fixed to the back guide bars 111 to 114 are respective pairs of downwardly depending rods 115, 116, 117 and 118 to the bottom ends of which are secured two sets of threading tubes 119, 120, 121 and 122, respectively, the two sets of these tubes being juxtaposed to the paths of movement of the respective needles 103. The tubes 119, 121 and 122 of each set are the guide elements for the respective group of three cords 2, while the tube 120 of each set is the guide element for the respective stabilizing yarn 6 which may be fed thereto via an associated guide roller 120*a* (FIG. 20).

It will be understood, therefore, that the indicated movements of the back guide bars will shuttle the cords and the stabilizing yarns back and forth across the respective needle paths. To this end, the required movements of the back guide bars 111 to 114 are effected, in conventional manner, by means of a pattern drum and chain combination (not shown), or the like, driven by the main drive shaft 43 of the apparatus. The height of the pattern chain links acting on the stabilizing yarn guide bar 112 is, or course, chosen to be very small, so as to ensure that the stabilizing yarn is laid into the loops of the stitching yarn in almost straight condition, as previously indicated. At the same time, for the purposes of the illustrated tape forming operation, the links acting on the cord guide bars 111, 113 and 114 are so arranged that the guide bars 111 and 114 move in phase with each other and 180° out of phase with the guide bar 113. The links for the stabilizing yarn guide bar 112, as will be clear, may be arranged so as to cause that bar to be moved in phase either with the bars 111/114 or with the bar 113. Merely by way of example, for the formation of the two three-cord tapes 18 (which, as stated, are of the type designated 1b in FIGS. 3, 3*a* and 3*b*), the phase and amplitude scheme for the back guide bar set-up is graphically represented in FIG. 24*a*. The manner in which each yarn 4 is continuously knitted on the same needle 103 into a separate chain of loops or stitches each with three cords and the associated stabilizing yarn laid thereinto will be readily apparent to those skilled in the art.

Referring now to FIGS. 25 to 27, the joining device 24 of the apparatus A includes (see also FIG. 20) means 123 for applying a liquid cement or adhesive to each of the three-cord tapes, and means 124 for bringing and pressing the tapes together. The cement applicator means 123 (FIGS. 25 and 26) is shown as comprising a tapering nozzle-like member 125 provided with an internal bore 126 terminating near the tip of the member 125 in a pair of oppositely facing branch ports 126*a*. The nozzle member is retained in a housing 127 which also defines a pair of through passageways

127*a* for the two tapes **18** at the opposite faces of the member **125.** A duct or tube **128** is connected to the rear end of the bore **126** to enable the cement or adhesive to be fed to the nozzle from any suitable source (not shown), preferably by a pump and under pressure. In this manner, the facing surfaces of both three-cord tapes are coated with the cement to maximize the ultimate adhesion. It will be understood, however, that only coating one of the tapes or coating one to a greater extent than the other, may suffice as well.

The pressing means **124** is shown as comprising a pair of knurled or otherwise surface-roughened rollers **129** and **130** mounted on respective parallel shafts **131** and **132** and located in coplanar relation on opposite sides of the path of travel of the two three-cord tapes coming from the applicator **123,** with their closest peripheral portions spaced by slightly less than the combined thickness of the two three-cord tapes which are to pass therebetween (see FIG. **26**). The pressing rollers thus bring the tapes into intimate adhesion-promoting contact with each other. At the same time, the rollers exert a gripping force on the tapes and act to feed the finished six-cord tape **25** (which, as stated, is of the type designated **1**c in FIGS. **4** and **4***a*) through the joining device **24** and toward the tensioning device **27** by virtue of the sprocket **76** being mounted on the shaft **132.** To ensure that both rollers will rotate so as to engage the two three-cord tapes without any slippage, respective pinions or spur gears **133** and **134** in mesh with each other are also mounted on the shafts **131** and **132.** The synchronization of the feeding action of the pressing rollers **129** and **130** with that of the guide roller **23** through the drive train **71** to **76** also ensures that no slack is permitted to occur in the three-cord tapes while they are being brought together.

It will be understood, of course, that in a mass production environment, the apparatus A would be provided with as large a number of sets of one knitting needle **103,** one front guide bar threader **105,** and four back guide bar threaders **119** to **122,** as the number of three-cord tapes **18** to be formed, and with as large a number of joining devices **24,** take-up rolls **26,** and tension control devices **27** as the number of finished six-cord tapes to be produced.

The applicability of the so far described representative tape forming apparatus and method to the formation of some of the other high soft stretch tape constructions herein disclosed will be clear to those skilled in the art and need be commented on but briefly. Thus, the weakening step, the device **10** and the cord phasing step would simply be omitted or bypassed if tapes made of unweakened cords were the desired end products; if one-cord tapes were the desired end products, each starting cord would simply be fed to the undulating and typing device for individual processing therein and thence directly to the take-up roll, and neither cord to cord phasing nor tape to tape phasing and joining would be required; if unitarily formed tapes of plural side by side cords were the desired end products, the tape-phasing and cementing steps would simply be omitted; if a nine-cord tape or a twelve-cord tape made of three-cord sub-tapes were the desired end product, the corresponding number of three-cord tapes would first have to be formed from an appropriate number of starting cords and then brought together, with the cementing step being expanded accordingly; and so forth.

By the same token, if a tape made of a plurality of nested cords be the desired end product, each associated set of cords to be nested would have to be undulated as a unit and so fed to the tying mechanism, being first phased, of course, if weakened. If the tying means of the tape is to be a knitted stitching yarn, the undulating and tying device may be an appropriately modified version of the device **17** as so far described. Alternatively, however, if the tying means for the tape is to be a strip **5** of weak fabric or other sheet material (FIGS. **10** to **12**), the knitting mechanism part of the device **10** would have to be replaced by a laminating type mechanism (not shown) equipped with means for advancing the strip longitudinally over a table or the like disposed below the tubes **119, 121** and **122** (not stabilizing yarn **6** and guide tube **120** therefor would be required), so that the cords would be shuttled across and deposited onto the strip while the same is being advanced, thereby to achieve the desired generally sinusoidal configuration, the assembly then immediately being passed through a mechanism for securing the cords to the strip, e.g. a twin-needle sewing arrangement for a tape **1**g such as is illustrated in FIG. **10.**

The method of producing a 0° belted tire according to the present invention will now be described, in the first instance in a representative form as practiced with a six-cord high soft stretch belt-forming tape **25** (i.e. the type of tape designated **1***c* in FIGS. **4** and **4***a*) made by the method and apparatus illustrated in FIGS. **19** to **27.**

In the initial stages of the building operation, the procedure is generally conventional, as the various liner and body plies of the carcass, generally designated C in FIG. **13,** as well as any associated carcass components such as beads, chafer and filler strips, etc. (not shown), are first assembled on a standard low diameter building drum D, which may be either a flat drum or a shoulder drum. The term "low diameter" is here used to signify that the diameter of the drum, and thus also that of the generally cylindrical carcass built thereon, is appreciably smaller than the final diameter to which the tire will be radially expanded when being shaped into its desired toroidal form as an adjunct of the curing operation in the mold. It will also be understood that the body ply portion of the carcass C may be constituted by any desired number of plies of tire cord fabric in each of which the cords are disposed parallel to each other and oriented at such a starting angle relative to a plane perpendicular to the axis of the carcass as to be capable of ensuring that after the shaping operation the cords in such ply in the crown region of the tire will assume a prescribed angle lying between about 25° and 90° to the mid-circumferential plane of the tire.

The 0° belt-forming structure, generally designated B in FIG. **13,** is then built up by helically winding the tape **25,** constructed in accordance with the principles of the present invention of either unweakened or weakened cords and having the requisite degree of soft stretch, e.g. between about 50 and 90 percent in the case of most standard rim size passenger tires, for the required number of turns circumferentially about the medial region of the carcass at an angle of substantially 90° to a plane including the axis of the carcass, with the undulations of the cords disposed on end, i.e. in planes generally normal to the carcass surface and the surface of the building drum. Moreover, as shown in FIG. **13,** the tape is preferably wound with the turns of the belt-

forming structure spaced slightly from each other by a gap 30 of predetermined width, the reason for which will become clear as the description proceeds.

It will be understood, of course, that in order to achieve the stated orientation of the tape turns, i.e. in a direction as nearly perpendicular to a plane including the axis of the drum and the carcass as feasible and thus as close to the truly circumferential or 0° direction (with respect to a plane perpendicular to the aforesaid plane) as physically possible, it is necessary to ensure that the hexlix or winding angle of the tape be as small as possible. As previously indicated, within the ambit of the present inention this means having the helix angle be not greater than about 2° and preferably less than 1°. Since, for the illustrated belt-forming structure B, the magnitude of the helix angle will basically be a function of, on the one hand, the width of the tape (its dimension axially of the drum) plus the width of the gap between two adjacent turns of the tape, and of, on the other hand, the diameter of the drum, which parameters define, respectively, the lead of the helix and the length of one turn of the tape around the circumference of the drum, in the case of a passenger tire, for example, built on a 15 inch diameter drum and including a belt-forming structure utilizing a rubber-coated rayon cord six-cord tape, the width of which is about 0.3 inch, wound on end with a gap of about 0.1 inch, the winding angle is approximately ½° (actually about 0°29′). The angle is found by determining its tangent which is the quotient of the lead as above defined (tape width plus gap width) divided by the drum circumference, i.e. approximately 0.0085. The larger the drum diameter, of course, the wider a tape can be used without materially increasing the helix angle. Even in the case of a 15 inch diameter drum, however, the use of a nine-cord tape about 0.45 inch wide and wound with a 0.1 inch gap would only make the winding angle approximately ¾° (actually about 0°40′), and the use of a 0.6 inch wide twelve-cord tape wound with a 0.1 inch gap would only make the winding angle a shade more than ¾° (actually about 0°51′), both well within the preferred range of helix angles set forth above.

It is to be noted that in the raw tire construction shown in FIG. 13, a single tape is wound continuously over a desired width portion of the carcass, to constitute the belt-forming structure. The latter, the width of which may be less than, equal to or greater than the ultimately to be applied tread, could also be built up in other ways, however, as in two or more sections. This might entail, for example, winding up two tapes codirectionally at substantially equal helix angles, one from one lateral edge of the belt region toward the center thereof and one from the center toward the other lateral edge, or winding two tapes in opposite directions, either toward each other starting from the opposite lateral edges of the belt region or away from each other starting from the center of the belt region and in either case at substantially equal helix or winding angles oriented either in the same or in opposite senses relative to a plane perpendicular to the axis of the carcass and the drum. Moreover, it is also deemed advisable to effectively skive the tape at the opposite lateral edges of the belt-forming structure so as to minimize any possible discontinuity in the rubber to cord stress transfer in the ultimate finished tire. Ideally, this would be achieved by making a bias cut across the width of the tape at the end extremities thereof at an angle of, say, about 3 to 30°, and preferably about 5 to 15° or so, to the longitudinal dimension of the tape. Cutting the tape in this manner is not a practical expedient, however, and we approximate the same result, therefore, by simply peeling away and cutting off at each end of the tape, a predetermined length of the end region of the laterally outwardly facing three-cord tape component. In the case of the illustrated six-cord tape **25**, a length of about 2.5 inches is cut away, as indicated at 25*a* in FIG. **13**. In the case of a ninecord tape of the same basic construction, the simulated skiving would be effected by cutting a length of about 5 inches off the laterally outermost three-cord tape component, and a length of about 2.5 inches off the middle three-cord component; etc.

Reverting now to the actual tire building operation, once the belted carcass is in the condition shown in FIG. **13**, the building operation is completed, first by the application of any still missing interior tire components, e.g. additional filler strips, rubber plies or cushions, etc. (not shown), and finally by the addition of the exterior covering of tread rubber **31** (FIG. **14**) to form the tread and sidewalls of the tire, with the tread-forming portion of the tread rubber being properly centered on the carcass C and overlying the belt-forming structure B. The tread and sidewalls may, in known fashion, be formed by fitting and appropriately butt-jointing or splicing a single full-width slab or somewhat narrower individual slabs of tread rubber about the carcass, or by continuously winding the tread rubber in relatively narrow continuous strip form for a plurality of turns around the carcass until the desired configuration has been attained. Any seam in the tread rubber should, of course, be firmly stitched and adhered to the carcass before the cylindrical raw or green tire is removed from the drum preparatory to being subjected to the shaping operation.

It will be understood that, although the complete tire building operation has so far been described and illustrated as being performed at one and the same station, parts of it may be performed in different locations and/or at different times. Thus, if considerations of manufacturing techniques, factory space, productivity requirements or the like so dictate, the drum D carrying the belted carcass may be transferred from the carcass building station to a remote tread applying station, or the belted carcass may be removed from the drum without any tread rubber applied thereto and then, still in cylindrical or flat band form, may be remounted at a later time onto a different drum at another station to enable the tread rubber to be applied at the latter station, or a still unbelted carcass may be transferred either on or off the building drum and then, still in its cylindrical or flat band form, be remounted for the belt building and tread rubber applying operations at another station. All of these are nevertheless deemed single-stage tire building operations as that term has been defined herein.

The single-stage built, raw 0° belted tire according to the present invention is then subjected to a shaping operation, which may be performed either preliminary to or concurrently with the start of the molding operation, as previously explained herein. During the shaping operation, the beads of the tire are displaced toward one another, and concurrently therewith the body of the tire is ballooned or radially expanded into its desired toroidal shape.

In the course of this radial expansion, the tape as an entity is subjected to substantial tensile forces which are far in excess of the tensile strengths of the stabilizing yarns **6** and stitching yarns **4** incorporated in the tape. These yarns offer no more than a very low resistance to the extension of the tape and the straightening of the cords and actually rupture almost right at the beginning of the radial expansion of the tire. Moreover, as the shaping operation takes place and the cords straighten out, the belt-forming structure concomitantly becomes somewhat narrower. It will be apparent, therefore, that it is to facilitate this narrowing and at the same time to prevent the cords from bunching up at indeterminate locations across the width of the belt, that the winding gap **30** between the turns of the tape **25** in the belt-forming structure B is provided. The width of the gap is, or course, predetermined and selected to yield the desired cord density in the final belt without unduly increasing the helix or winding angle. Nevertheless, it should be understood that the gap may be either omitted entirely or not specifically controlled to be uniform throughout, if some bunching of the cords and a resultant non-uniformity of the belt can be tolerated.

As previously indicated, furthermore, in accordance with the present invention the soft stretch built into the tape may either be as nearly as possible equal to, or may be deliberately made somewhat less than, say on the order of about 1 to 3 percent, the ultimate full expansion or stretch ratio required. In the latter case, of course, the cords lose their undulations fully just before the radial expansion of the tire is completed, and the final part of the expansion (in the mold this would be during the forcing of the tire against the mold surfaces under the action of the high fluid pressure in the curing bladder) is accommodated by an elastic elongation of the cords, i.e. a hard stretch. It is to guard against the possibility of excessive strain in the cords during this stage that the individual cords would normally also be locally deteriorated or weakened, preferably by being nicked or partially out through, at a multiplicity of longitudinally spaced intervals as described.

At the end of the shaping operation, therefore, once the individual component cords of the tape **25** constituting the belt-forming structure B are straightened out and their undulations removed, the belt **32** (FIG. **15**) is a monoply structure in which the cords extend about the crown region of the carcass **33** of the tire **34** (the carcass may have fewer or more plies than the two shown) in a plural-wind or six-lead screw thread-like arrangement. Moreover, since, as previously stated, the expansion occurs without any pantographing movement of the belt cords, in the final belt all cords are disposed parallel to each other and oriented at the desired 0°-approximating angle to the mid-circumferential plane of the tire, i.e. at approximately the same angle as the originally wound turns of the tape. Where the belt-forming structure is built of helically wound tape of nested cord systems, it will be clear, the final belt is a multiply structure having otherwise the same characteristics as those set forth above for the monoply belt; thus, the use of a tape if such as shown in FIG. **9** wound on end would produce a tire **34***a* (FIG. **16**) in which the belt **32**a is a two-ply structure of parallel cords oriented in the 0° or circumferential direction and in a five-lead screw thread-like arrangement; the use of a tape **1***h* such as shown in FIG. **12** wound on end would produce a tire **34***b* (FIG. **17**) in which the belt **32***b* is a four-ply structure of parallel cords oriented in the 0° direction and in a five-lead screw thread-like arrangement; and so forth. It will further be clear that although the representative belts **32, 32***a* and **32***b* are shown in FIGS. **15,** 16 and **17** as embodied in finished tires, the arrangements obviously would be the same in shaped but as yet uncured tires.

To illustrate the monoply belt construction somewhat better, the same (and except for modification dictated by the number of plies, the following description will apply to the multiply belts as well) is shown in a purely diagrammatic way in FIG. **18,** where a series of weakened cord portions **35** (which will not be present, of course, in a belt made of unweakened cords) is also indicated. It should be noted that even in a weakened cord belt, however, not all of the weakened portions **35** will necessarily be ruptured or even identically strained, due to the fact that ordinarily not all the cords will be stressed equally or uniformly in the last part of the radial expansion of the tire.

It is also contemplated by the present invention that in a weakened cord belt any alignment of the weakened cord portions (or breaks, if any) in a direction parallel to the belt axis be avoided as far as possible, in order to avoid creation of a continuous line of weakness of the belt in the direction transversely to the tread. The most preferred arrangement in one in which, as shown in FIG. **18,** each weakened cord portion is laterally succeeded in one direction or the other parallel to the axis of the tire by at least two unweakened cord portions. To this end, the spacing of the weakened portions is selected preferably to be in irregular fraction or multiple of the circumferential length of one turn of the belt cord.

This will best be comprehended by reference to FIG. **18**a, in which the illustrated diagram is a schematic representation of a developed plan of somewhat more than two full turns of the weakened cord belt **32** of FIG. **18** for a **70** series, 15 inch rim diameter tire. The diagram thus equivalently is a schematic representation of the straightened, locally weakened cords in a section of corresponding length of the six-cord tape **25** (or **1***c*) used to form the belt. The crosses in the six lines of the diagram represent the locations of the weakened cord portions **35.** The dimension value of **84''**, indicated twice at the bottom of FIG. **18,** represents the approximate circumferential dimension of the belt for the tire under discussion at full belt diameter. Correspondingly, the dimension value of **90''**, indicated twice at the top of FIG. **18** as well as twice more elsewhere, represents the weakening interval or spacing, i.e. the cord length between successive weakened portions formed by the device **10** (FIG. **19**) in any given cord, which for this tire is seen to be more than the length of one full turn of the belt cord. Concomitantly, the dimension value of **30''**, indicated twice in each of the upper and lower halves of the diagram, represents the longitudinal offsetting or phasing of the weakened portions of each cord in each group of three relative to those of each next adjacent cord in the same group for the tire under discussion, while the dimension value of **15''**, indicated only once in the middle region of the diagram, represents the longitudinal offsetting or phasing of the entire set of weakened portions of each group of three cords relative to the corresponding set of weakened portions of the other group of three cords.

It will be understood that the illustrated relative dispositions of the various weakened cord portions, i.e. their non-alignment across the entire grouping of six cords in a direction at right angles to the longitudinal dimensions of the cords (corresponding to the axial direction of the tire), is the end result of the combination of phasing steps performed, respectively, on the starting two groups of three cords **2** and on the subsequently formed two three-cord tapes **18** (or **1***b*) during the formation of the six-cord tape **25** (or **1***c*) by the method illustrated in FIG. **19**. In each group of three cords, of course, the phasing of the weakened portions thereof relative to each other, once established, does not undergo any change thereafter either while the cords are being undulated during the forming of the respective three-cord tape, or while the latter is being combined with the other three-cord tape, or while the belt-forming structure B shown in FIGS. **13** ans **14** is being extended to its final circumferential length during the radial expansion of the tire.

By virtue of the 0° orientation of the cords in the belt **32**, therefore, in combination with the weakened interval being an irregular multiple of the length of one full turn of each cord, the various weakened portions of any given cord in the belt are circumferentially staggered relative to each other about the axis of the tire, as shown, by way of example, only for the No. **1** cord in FIG. **18**, i.e. they are disposed somewhat more than one full turn (360°) apart and thus are nonaligned in the axial direction. At the same time, by virtue of the relative phasing of the cords as described, none of the weakened portions of any given cord is in side by side juxtaposition to or axial alignment with a weakened portion of an immediately adjacent cord, as shown, by way of example, for one full turn of the entire series of No. **1** to No. **6** cords at the right-hand side of FIG. **18**, so that each weakened cord portion is ordinarily laterally bounded by or confined between a relatively large number of unweakened cord portions. The belt thus does not have any uninterrupted line of weakness across its width, such as would inevitably be represented by a transverse splice, despite the presence of the weakened cords which also engender no appreciable loss of either circumferential or transverse modulus of the belt vis-a-vis a 0° belt having no weakened cords therein.

It should be understood that although the representative weakened cord belt construction which has so far been described is characterized by the cord length between successive weakened portions of any given cord being greater than the circumferential length of the belt, i.e. of one full turn of the belt cord, the cord weakening interval may also be less than, and in particular an irregular fraction of, the circumferential belt length. Subject to the restriction of axial non-alignment of the weakened cord portions and breaks, if any, as outlined above, therefore, the general rule to be applied in determining the weakening interval is that the spacing of the weakened portions in each cord should be equal to at least the stress transfer length, i.e. that length of the cord over which the adhesion thereof to the surrounding rubber is equal to the breaking strength of the cord, and preferably the spacing should be such that in the finished tire successive weakened portions in each cord will be a distance of more than 360°, i.e. the full belt circumference plus the stress transfer length, apart. Merely by way of example, the spacing may range from about 365° to about 385° or so.

It will furthermore be apparent that, subject to the same restriction, the cords included in and making up a high soft stretch tape according to the present invention may be completely severed or cut through, rather than being nicked or otherwise weakened, prior to the radial expansion of the tire. Where cords fully severed prior to the tire shaping operation are to be used, however, a slight change in the tape manufacturing method is required, in that the cutting of the cords will, as a practical matter, have to be effected after the cords have been processed through the undulating and tying device.

The basic advantage of the present invention, of course, as already pointed out, is that the provision and use of the herein disclosed high soft stretch tapes of cords with substantially planar and preferably generally sinusoidal undulations make possible the single-stage building of 0° belted tires, i.e. even though the belt cords are substantially inextensible and are helically wound circumferentially about the carcass at an angle of substantially 90° to a plane including the axis of the carcass. Moreover, the belt cords reach their 0° orientation without having to undergo any pantographing movements, whereby the lack of precision inherent in any change of cord angle during the tire shaping operation is effectively overcome. At the same time, the need for calendering belt cords into ply formation and for then properly bias cutting such plies to the correct starting cord angle is avoided, as is the need for subsequently splicing each such ply on the building drum, whereby any resultant dynamic unbalance and weakness in the finished tire due to the presence of such a splice is also avoided. Yet other advantages will readily suggest themselves to those skilled in the art.

It will be understood that the foregoing description of a number of representative embodiments of the present invention is for purposes of illustration only, and that the diverse structural and operational features and relationships herein disclosed are susceptible to various modifications and changes none of which entails any departure from the spirit and scope of the present invention as defined in the hereto appended claims. Thus, merely by way of example, although the belt-forming structure preferably is built by winding the tape on with its undulations on end, as herein described, it is contemplated by the present invention that under certain circumstances a belt-forming structure may be built of tape wound with the undulations "flat", i.e. generally lying along a substantially cylindrical locus concentric with the building drum. Also, the tying means for holding the cord or cords making up the tape in the undulating state may be a stretchable yarn or a strip of stretchable sheet material in lieu of being frangible, but in such a case, whereas the use of a frangible tying means need not be accompanied by the incorporation of a stabilizing yarn in the tape (although it preferably is), a stretchable tying means must be accompanied by a stabilizing yarn of sufficient strength to give the tape the required integrity, i.e. to provide resistance to premature elongation of the tape and thereby to compensate for the yieldability of the tying means which otherwise would permit a loss of stretch ratio of the tape during the building of the belt-forming structure. Where the tying means is a yarn, furthermore, in lieu of a series of loops disposed, as shown herein, in a

single line substantially along the longitudinal midline of the tape and each embracing and confining a respective one, or a respective laterally adjacent group, of the transitional portions of the cord or cords, the tying means may be in the form of more than one series of loops, e.g. two parallel, one wale wide, disconnected chains of loops warp knitted of separate stitching yarns by two separate needles, with the cord or cords laid into both chains of loops by being shuttled back and forth across both needle paths. In a tape of this type using frangible stitching yarns, the use of a stabilizing yarn may, if desired, actually be dispensed with, since its function will probably be effectively achieved by the concerted action of the several stitching yarns.

Having thus described the invention, what we claim and desire to protect by Letters Patent is:

1. A 0° belted tire, comprising:

A. a toroidal carcass;

B. a rubber tread extending from one shoulder of the tire to the other in surrounding relation to the crown region of said carcass; and

C. a 0° belt disposed beneath said tread and circumferentially of said carcass;

D. said belt being constituted of

1. a plurality of reinforcing cords
2. extending as a unit in a substantially straight condition helically circumferentially of said carcass
3. for at least a plurality of full turns
4. at an angle of substantially 0° to the mid-circumferential plane of said carcass,
5. at least two of said plurality of said cords in each turn thereof in said belt being disposed in side by side relation to one another widthwise of said belt and thereby being arranged in a multiple lead screw thread-like formation over the width of said belt, and

E. each of said cords being locally weakened at a multiplicity of longitudinally spaced portions thereof,

1. said weakened portions of each cord being out of lateral alignment with the weakened portions of at least each next adjacent cord, and
2. the extent of weakening of each cord being sufficient to reduce the tensile strength thereof at each of said weakened portions to between about 5 percent and about 20 percent of its full tensile strength.

2. A tire according to claim **1**, wherein all of said plurality of said cords in each turn thereof in said belt are disposed in side by side relation to one another widthwise of said belt.

3. A tire according to claim **1**, wherein at least two additional ones of said plurality of said cords in each turn thereof in said belt are disposed in side by side relation to one another widthwise of said belt and are thereby arranged in a respective multiple lead screw thread-like formation over the width of said belt, the locus of said additional cords with reference to the axis of said carcass being radially outwardly relative to the locus of said first-named cords to provide a second ply of helically circumferentially extending 0° oriented cords in said belt.

4. A tire according to claim **1**, wherein said plurality of said cords includes a plurality of sets of at least two cords each, the respective cords of each set being disposed in side by side relation to one another widthwise of said belt and thereby being arranged in a respective multiple lead screw thread-like formation over the width of said belt, and the respective loci of said sets of cords with reference to the axis of said carcass being radially outwardly of each other to provide a like numbered plurality of plies of helically circumferentially extending 0° oriented cords in said belt.

5. A tire according to claim **1**, wherein the spacing of successive weakened portions in each cord is greater than the circumferential length of one full turn of that cord in said belt.

6. A tire according to claim **5**, wherein said spacing of successive weakened portions in each cord exceeds said circumferential length of said one full turn thereof by an amount to an arc length of about 5° to about 25° of said belt.

7. A tire according to claim **1**, wherein the spacing of successive weakened portions in each cord is an irregular fraction of the circumferential length of one full turn of that cord in said belt.

8. A tire according to claim **1**, wherein the spacing of successive weakened portions in each cord is an irregular multiple of the circumferential length of one full turn of that cord in said belt.

9. A tire according to claim **1**, wherein at least one of said cords is broken at at least one of said weakened portions thereof.

10. A tire according to claim **1**, wherein said carcass comprises at least one ply of tire cords, the individual tire cords in at least said one ply being substantially parallel to each other and within the confines of said crown region of said carcass being oriented at an angle of between about 25° and 90° to the midcircumferential plane of said carcass.

11. A tire according to claim **10**, wherein the carcass cord angle is between about 25° and about 45°.

12. A tire according to claim **11**, wherein the carcass cord angle is between about 30° and about 35°.

13. A tire according to claim **10**, wherein the carcass cord angle is between about 50° and about 75°.

14. A tire according to claim **13**, wherein the carcass cord angle is between about 65° and about 70°.

15. A tire according to claim **10**, wherein the carcass cord angle is between about 80° and 90°.

16. A tire according to claim **15**, wherein the carcass cord angle is between about 83° and about 87°.

17. A tire according to claim **15**, wherein the carcass cord angle is 90°.

18. A tire according to claim **1**, the respective end region of said plurality of said cords in the outermost turn thereof at at least one lateral edge of said belt being effectively skived across its width at an angle of between about 3° and about 30° to the longitudinal dimension of said plurality of said cords, the direction of the skive being such as to provide the shortest cord length closest to the respective proximate shoulder of the tire.

19. A tire according to claim **18**, wherein said skive is approximated by a step-off formation of said plurality of said cords at said end region thereof.

20. A tire according to claim **1**, wherein the spacing of said weakened portions from one another along each cord in said belt is equal to at least the stress transfer length of that cord defined as the length thereof over which the adhesion of the surrounding rubber to the cord in the fully molded tire is equal to the breaking strength of the cord.

21. A tire according to claim **20**, wherein said spacing of said weakened portions in each cord is greater

than the circumferential length of one full turn of that cord in said belt.

22. A tire according to claim 21, wherein said spacing of said weakened portions in each cord exceeds circumferential length of said one full turn thereof by an amount equal to an arc length of about 5° to about 25° of said belt.

23. A tire according to claim 1, wherein the tension component of each of said cords is made of a material selected from the group consisting of metallic and non-metallic fibers.

24. A tire according to claim 23, wherein said cord tension component material is rayon.

25. A tape according to claim 23, wherein said cord tension component material is glass.

26. A tape according to claim 23, wherein said cord tension component material is metal wire.

27. A tape according to claim 23, wherein said cord tension component material is nylon.

28. A tape according to claim 23, wherein said cord tension component material is polyester.

29. A raw 0° belted tire, comprising:

A. a carcass in the as built form thereof, said as built carcass

1. being constructed to enable the same to be transformed into a toroidal carcass by a shaping operation, and

2. having in the medial region thereof a diameter which is substantially smaller than the corresponding diameter of said toroidal carcass in the crown region thereof; and

B. a 0° belt-forming structure disposed within the confines of said medial region of said as built carcass;

C. said belt-forming structure being constituted of

1. high soft stretch reinforcing cord tape

2. helically wound circumferentially of said as built carcass

3. for at least a plurality of full turns

4. at an angle of substantially 90° to a plane including the axis of said as built carcass;

5. said tape being constituted of

a. a plurality of reinforcing cords arranged in side by side relation to one another widthwise of said belt-forming structure and each

i. having a multiplicity of undulations therein

ii. which in any given straight length of said tape are substantially planar

iii. and enable said tape to be elongated, without any stretching of said cords, by straightening of the latter to remove said undulations therefrom,

iv. the plane of each undulation of each such cord being substantially parallel to the plane of the corresponding undulation of each next adjacent cord, and

v. said undulations of each cord being out of lateral alignment with the undulations of each next adjacent cord; and

b. relatively weak tying means acting on said cords and releasably holding the same in the undulating state thereof, said tying means being constructed

i. to hold said cords against straightening under moderate forces such as are applied to said tape during normal handling thereof and the building of said belt-forming structure,

ii. but to yield and permit said cords to straighten out under appreciably higher forces such as are applied to said tape when said belt-forming structure composed thereof and said as built carcass undergo a radial expansion during shaping;

c. the magnitude of said undulations of said cords being predetermined to provide a tape stretch ratio, defined as the ratio of the length of each of said cords when fully straight to the length of said tape when said cords are undulated, which is no greater than substantially equal to the expansion ratio of the tire, defined as the ratio of said diameter of said toroidal carcass to said diameter of said as built carcass.

30. A raw tire according to claim 29, wherein said stretch ratio of said tape is between about 1.2 and about 4.

31. A raw tire according to claim 29, wherein said stretch ratio of said tape is between about 1.5 and about 1.9.

32. A raw tire according to claim 29, said tape constituting said belt-forming structure being wound so as to dispose said cords with said undulations thereof standing on end with reference to the surface of said as built carcass.

33. A raw tire according to claim 29, said tape constituting said belt-forming structure being wound so as to dispose said cords with said undulations thereof lying flat with reference to the surface of said as built carcass.

34. A raw tire according to claim 29, wherein the respective end region of said tape in the outermost turn thereof at at least one lateral edge of said beltforming structure is effectively skived across its width at an angle of between about 3° and about 30° to the longitudinal dimension of said tape, the direction of the skive being such as to provide the shortest cord length closest to the proximate axial end or bead region of said as built carcass.

35. A raw tire according to claim 34, wherein said skive is approximated by a step-off formation of said tape at said end region thereof.

36. A raw tire according to claim 29, wherein said tying means is secured to all of said cords for holding them in their respective undulating states and binding them to each other.

37. A raw tire according to claim 36, said tying means comprising a frangible stitching yarn defining a series of loops coextensive with the length of said tape, each of said loops embracing a respective set of laterally adjacent portions of said cords at said undulations.

38. A raw tire according to claim 36, wherein said undulations of said cords constituting said tape are generally sinusoidal, said tying means comprising a frangible stitching yarn warp-knitted in a 1-0/0-1 pattern into a chain stitch formation of loops coextensive with the length of said tape, each of said loops embracing a respective laid-in set of laterally adjacent portions of said cords at said undulations, and said tape further comprising a frangible stabilizing yarn extending londitudinally of said tape in an almost straight condition, respective portions of said stabilizing yarn being embraced by said loops jointly with the laterally adjacent portions of said cords, the strength of said stabilizing yarn being sufficient to prevent a premature opening of

said loops under said moderate forces but insufficient to withstand said higher forces.

39. A raw tire according to claim **38**, wherein said undulations of each cord are out of phase with the undulations of each next adjacent cord.

40. A raw tire according to claim **29**, wherein said plurality of said cords includes a plurality of sets of at least two side by side undulating cords each, and said tape comprises a respective tying means for each of said sets of cords and additional tying means securing said sets of cords to each other in side by side relation.

41. A raw tire according to claim **40**, wherein each of said respective tying means comprises a frangible stitching yarn defining a series of loops coextensive with the length of said tape, each of said loops embracing a respective set of laterally adjacent portions of the respective set of said cords at said undulations thereof, and at least one of each two adjacent sets of said cords being provided on the abutting side cord thereof with a coating of a tacky substance, constituting said additional tying means, to enable said sets of said cords to adhere to each other.

42. A raw tire according to claim **40**, wherein said undulations of said cords constituting said tape are generally sinusoidal, each of said respective tying means comprising a frangible stitching yarn warp-knitted in a 1-0/0-1 pattern into a chain stitch formation of loops coextensive with the length of said tape, each of said loops embracing a respective laid-in set of laterally adjacent portions of the respective set of said cords at said undulations thereof, and said tape further comprising a plurality of frangible stabilizing yarns extending londitudinally of said tape in an almost straight condition and each associated with a respective one of said sets of said cords, respective portions of each of said stabilizing yarns being embraced by said loops of the associated stitching yarn jointly with the laterally adjacent portions of said cords of the respective set thereof, the strength of said stabilizing yarns being sufficient to prevent a premature opening of said loops under said moderate forces but insufficient to withstand said higher forces, and at least one of each two adjacent sets of said cords being provided on the abutting side cord thereof with a coating of a tacky substance, constituting said additional tying means, to enable said sets of said cords to adhere to each other.

43. A raw tire according to claim **42**, said undulations of each cord of each of said sets thereof being out of phase with the undulations of each next adjacent cord of the same set, and said undulations of the two abutting side cords of each two adjacent sets of said cords being out of phase with each other.

44. A raw tire according to claim **43**, each of said cords being at full strength throughout its length, and said stretch ratio of said tape additionally being no smaller than said expansion ratio less the elastic strain capability of said cords.

45. A raw tire according to claim **43**, each of said cords being locally weakened at a multiplicity of longitudinally spaced portions thereof, said weakened portions of each cord being out of lateral alignment with the weakened portions of at least each next adjacent cord, and said stretch ratio of said tape additionally being no smaller than said expansion ratio less approximately the capability of said cords to elongate by strain, by partial untwisting, and by rupture at said weakened portions.

46. A raw tire according to claim **45**, wherein the extent of weakening of each cord is sufficient to reduce the tensile strength thereof at each of said weakened portions to between about 5% and about 20% of its full tensile strength.

47. A raw tire according to claim **45**, each of said cords being provided with a plurality of nicks spaced from each other along the respective cord, each of said nicks in each cord constituting a respective one of said weakened portions thereof.

48. A raw tire according to claim **47**, wherein the depths of said nicks are sufficient to reduce the tensile strength of each cord at each of the nicked portions thereof to between about 5 percent and about 20 percent of its full tensile strength.

49. A raw tire according to claim **47**, wherein the spacing of adjacent nicks from one another in each cord is equal to at least the stress transfer length of the respective cord, defined as the length thereof over which the adhesion of the surrounding elastomer material to the cord in the fully molded tire is equal to the breaking strength of the cord.

50. A raw tire according to claim **47**, wherein the spacing of successive nicks from one another in each cord is greater than will be the circumferential length of one full turn of that cord in the ultimate belt to be formed when said as built carcass is shaped into said toroidal carcass.

51. A raw tire according to claim **50**, wherein said spacing of successive nicks in each cord exceeds said circumferential length of said one full turn thereof in the ultimate belt by an amount equal to an arc length of about 5° to about 25° of said ultimate belt.

52. A raw tire according to claim **47**, wherein the spacing of successive nicks from one another in each cord is an irregular fraction of what will be the circumferential length of one full turn of that cord in the ultimate belt to be formed when said as built carcass is shaped into said toroidal carcass.

53. A raw tire according to claim **47**, wherein the spacing of successive nicks from one another in each cord is an irregular multiple of what will be the circumferential length of one full turn of that cord in the ultimate belt to be formed when said as built carcass is shaped into said toroidal carcass.

54. A raw tire according to claim **29**, wherein each of said side by side cords is further disposed in nesting relation with at least one additional identically undulating cord.

55. A single-stage built raw 0° belted tire, comprising:

A. a generally cylindrical, flat band carcass;

B. said flat carcass including

1. a pair of coaxial, spaced, parallel bead rings, and
2. a generally cylindrical body portion of at least one ply of rubberized tire cord fabric
   a. anchored at the opposite marginal regions thereof to said bead rings, respectively, and
   b. having a relatively low diameter intermediate said bead rings,
3. said body portion being constructed to enable said flat band carcass to be shaped into a toroidal carcass by a radial expansion of the medial region of said flat band carcass to a relatively high diameter and by a concurrent axial contraction of said bead rings toward one another;

C. an outer covering of tread rubber circumferentially surrounding said flat band carcass and overlying said medial region of the latter; and

D. a belt-forming structure disposed beneath said tread rubber and within the confines of said medial region of said flat band carcass;

E. said belt-forming structure being constituted of

1. high soft stretch reinforcing cord tape
2. helically wound circumferentially of said flat band carcass
3. for at least a plurality of full turns
4. at an angle of substantially 90° to a plane including the axis of said flat band carcass;
5. said tape being constituted of
   a. a plurality of reinforcing cords
      i. each having a multiplicity of generally sinusoidal undulations therein
      ii. which in any given straight length of said tape are substantially planar
      iii. and enable said tape to be elongated, without any stretching of said cords, by straightening of the latter to remove said undulations therefrom,
      iv. said cords being located in side by side relation to one another with the plane of each undulation of each cord substantially parallel to the plane of the laterally adjacent undulation of each next adjacent cord and substantially perpendicular to the surface of said flat band carcass, and
      v. said undulations of each cord being out of phase with the undulations of each next adjacent cord;
   b. a relatively weak, frangible stitching yarn warp-knitted in a 1-0/0-1 pattern into a chain stitch formation of loops coextensive with the length of said tape, each of said loops embracing at said undulations a respective laid-in set of intersecting cord portions of said tape, said stitching yarn being operable
      i. to hold said cords in the undulating state thereof and against straightening under moderate forces such as are applied to said tape during normal handling thereof and the building of said belt-forming structure,
      ii. but to yield and permit such cords to straighten out under appreciably higher forces such as are applied to said tape when said belt-forming structure composed thereof and said flat band carcass undergo a radial expansion during shaping; and
   c. at least one frangible stabilizing yarn extending longitudinally of the tape in an almost straight condition, respective portions of said stabilizing yarn being embraced by said loops jointly with the adjacent ones of said intersecting cord portions, the strength of said stabilizing yarn being sufficient to prevent a premature opening of said loops under said moderate forces but insufficient to withstand said higher forces;
   d. the magnitude of said undulations of said cord being predetermined to provide a tape stretch ratio, defined as the ratio of the length of a given one of said cords when fully straight to the length of said tape when said cords are undulated, which is no greater than substantially equal to the expansion ratio of the tire, defined as the ratio of said high diameter to said low diameter.

56. A raw tire according to claim 55, wherein said plurality of said cords includes a plurality of sets of at least two side by side undulating cords each, a respective frangible stitching yarn and a respective frangible stabilizing yarn for each of said sets of cords, and a coating of a tacky substance on the abutting side cord of at least one of each two adjacent sets of said cords, to enable said sets of said cords to adhere to each other.

57. A raw tire according to claim 56, each of said cords being at full strength throughout its length, and said stretch ratio of said tape additionally being no smaller than said expansion ratio less the elastic strain capability of said cords.

58. A raw tire according to claim 56, each of said cords being locally weakened at a multiplicity of longitudinally spaced portions thereof, said weakened portions of each cord being out of lateral alignment with the weakened portions of at least each next adjacent cord, and said stretch ratio of said tape additionally being no smaller than said expansion ratio less approximately the capability of said cords to elongate by strain, by partial untwisting, and by rupture at said weakened portions.

59. A raw tire according to claim 58, wherein the extent of weakening of each cord is sufficient to reduce the tensile strength thereof at each of said weakened portions to between about 5 percent and about 20 percent of its full tensile strength.

60. A raw tire according to claim 58, wherein each of said cords is provided with a multiplicity of nicks each constituting a respective one of said weakened portions.

61. A raw tire according to claim 60, wherein the depths of said nicks are sufficient to reduce the tensile strength of each of said cords at each of the nicked portions thereof to between about 5 percent and about 20 percent of its full tensile strength.

62. A raw tire according to claim 56, wherein the tension component of each of said cords is made of a material selected from the group consisting of metallic and non-metallic fibers.

63. A raw tire according to claim 62, wherein said cord tension component material is rayon.

64. A raw tire according to claim 62, wherein said cord tension component material is glass.

65. A raw tire according to claim 62, wherein said cord tension component material is metal wire.

66. A raw tire according to claim 62, wherein said cord tension component material is nylon.

67. A raw tire according to claim 62, wherein said cord tension component material is polyester.

68. a raw tire according to claim 55, wherein the respective end regions of the two laterally outermost turns of said tape constituting said belt-forming structure at the lateral edges of the latter are effectively skived across the width of said tape at an angle of between about 3° and about 30° to the longitudinal dimension of said tape.

69. A tire according to claim 68, wherein said skive is approximated in said belt-forming structure by a step-off formation of said tape such that the laterally outermost cords terminate before the laterally inwardmost cords at each end of said tape.

* * * * *

UNITED STATES PATENT AND TRADEMARK OFFICE

CERTIFICATE OF CORRECTION

PATENT NO. : 3,900,062

DATED : August 19, 1975

INVENTOR(S) : James J. Neville et al.

It is certified that error appears in the above-identified patent and that said Letters Patent are hereby corrected as shown below:

Column 1, line 8, for "protection" read --production--; line 17, for "portin" read --portion--; line 26, for "pieces" read --plies--; line 30, for "mediam" read --median--; line 31, for "of" (first occurrence) read --or--; line 51, for "rubbes" read --rubbers--; line 57, for "metalic" read --metallic--. Column 2, line 54, for "modules" read --modulus--. Column 3, line 10, delete "a". Column 5, line 11, after "added" read --at--; line 19, for "plane" read --planes--; line 23, for "or" read --of--; line 39, after "0°" read --belted--; line 51, for "combination" read --connection--; line 63, for "straigtened" read --straightened--. Column 8, line 5, for "one" read --on--; line 45, for "code" read --cords--. Column 9, line 36, for "of" (first occurrence) read --or--. Column 13, line 19, delete "filed of even date herewith"; line 32, for "omechanical" read --mechanical--. Column 19, line 56, for "typing" read --tying--. Column 20, line 15, for "not" read --no--. Column 24, line 33, for "in" read --an--. Column 28, line 14, after "amount" read --equal--. Column 29, line 4, after "exceeds" read --said--.

Signed and Sealed this

thirteenth Day of *April 1976*

[SEAL]

Attest:

RUTH C. MASON
Attesting Officer

C. MARSHALL DANN
Commissioner of Patents and Trademarks

UNITED STATES PATENT AND TRADEMARK OFFICE

CERTIFICATE OF CORRECTION

PATENT NO. : 3,900,062

DATED : August 19, 1975

INVENTOR(S) : James J. Neville et al.

It is certified that error appears in the above-identified patent and that said Letters Patent are hereby corrected as shown below:

Column 1, line 8, for "protection" read --production--; line 17, for "portin" read --portion--; line 26, for "pieces" read --plies--; line 30, for "mediam" read --median--; line 31, for "of" (first occurrence) read --or--; line 51, for "rubbes" read --rubbers--; line 57, for "metalic" read --metallic--. Column 2, line 54, for "modules" read --modulus--. Column 3, line 10, delete "a". Column 5, line 11, after "added" read --at--; line 19, for "plane" read --planes--; line 23, for "or" read --of--; line 39, after "0°" read --belted--; line 51, for "combination" read --connection--; line 63, for "straigtened" read --straightened--. Column 8, line 5, for "one" read --on--; line 45, for "code" read --cords--. Column 9, line 36, for "of" (first occurrence) read --or--. Column 13, line 19, delete "filed of even date herewith"; line 32, for "omechanical" read --mechanical--. Column 19, line 56, for "typing" read --tying--. Column 20, line 15, for "not" read --no--. Column 24, line 33, for "in" read --an--. Column 28, line 14, after "amount" read --equal--. Column 29, line 4, after "exceeds" read --said--.

Signed and Sealed this

thirteenth Day of *April 1976*

[SEAL]

Attest:

RUTH C. MASON
Attesting Officer

C. MARSHALL DANN
Commissioner of Patents and Trademarks