United States Patent [19]

Freeman et al.

[11] **Patent Number: Des. 308,664**

[45] **Date of Patent: ** Jun. 19, 1990**

[54] **MODULAR TELEPHONE JACK**

[75] Inventors: **Michael Freeman,** Marlboro, Mass.; **Sally A. Hattle,** Oxford, Conn.; **Stanley Jaskiel,** Salem, Mass.; **Stephen Fidrych,** Boxborough, Mass.; **Michael Romm,** Brighton, Mass.

[73] Assignee: **Digital Equipment Corporation,** Maynard, Mass.

[**] Term: **14 Years**

[21] Appl. No.: **923,073**

[22] Filed: **Oct. 24, 1986**

[52] **U.S. Cl.** **D14/256;** D8/353

[58] **Field of Search** D13/24, 27–30, D13/40, 41, 11; D8/350, 353; 439/534, 535, 536, 577, 650, 652, 653; 174/52, 53, 66; 361/331, 334, 394, 395

[56] **References Cited**

U.S. PATENT DOCUMENTS

D. 299,422	1/1989	Williamson	D8/353
4,249,789	2/1981	Lee	439/650
4,411,485	10/1983	Wiseheart et al.	439/536 X
4,494,815	1/1985	Brzostek et al.	439/536

OTHER PUBLICATIONS

Suttle Apparatus Corp. "Guide to Telephone Wiring", 1985, p. 10, SE-468A Adapter.

Primary Examiner—Susan J. Lucas
Attorney, Agent, or Firm—Kenyon & Kenyon

[57] **CLAIM**

The ornamental design for a modular telephone jack, as shown and described.

DESCRIPTION

FIG. **1** is a top, front perspective view of a modular telephone jack showing our new design;
FIG. **2** is a bottom, rear perspective view thereof;
FIG. **3** is a front, elevational view thereof;
FIG. **4** is a rear elevational view thereof;
FIG. **5** is a top plan view thereof;
FIG. **6** is a bottom plan view thereof;
FIG. **7** is a right side elevational view thereof;
FIG. **8** is a left-side elevational view thereof;
FIG. **9** is a bottom rear perspective view of a second embodiment of our new design, the top, front, and opposite side of the second embodiment being identical to those of the first embodiment.

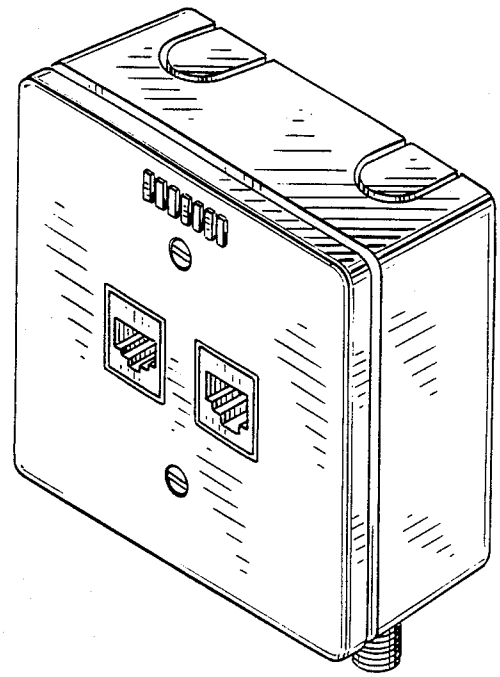

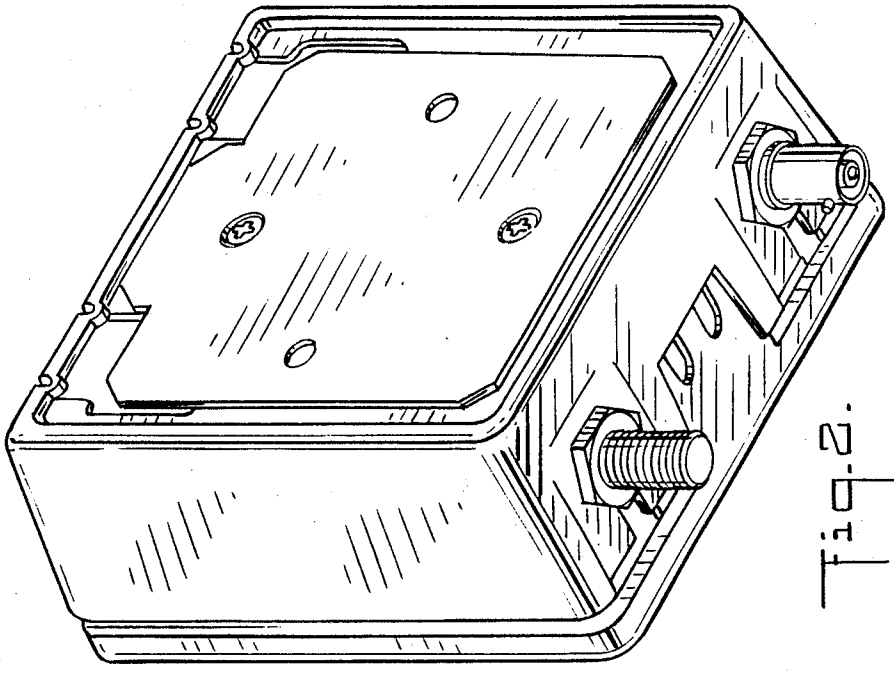

Fig.2.

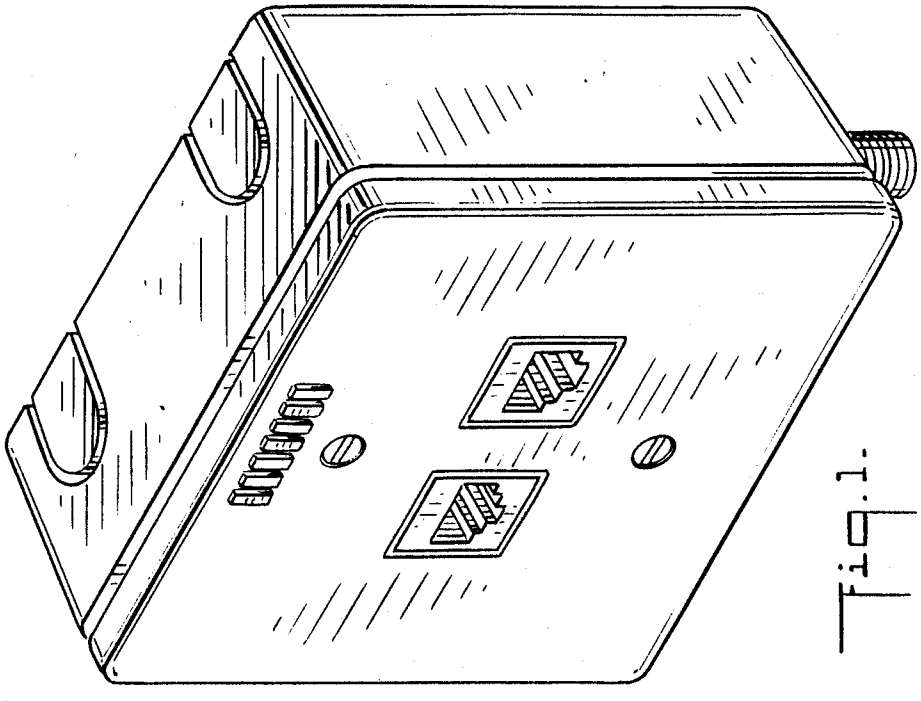

Fig.1.

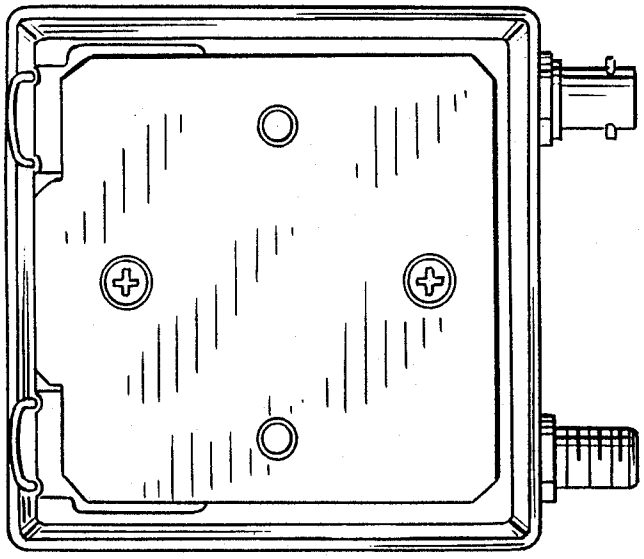

Fig. 4.

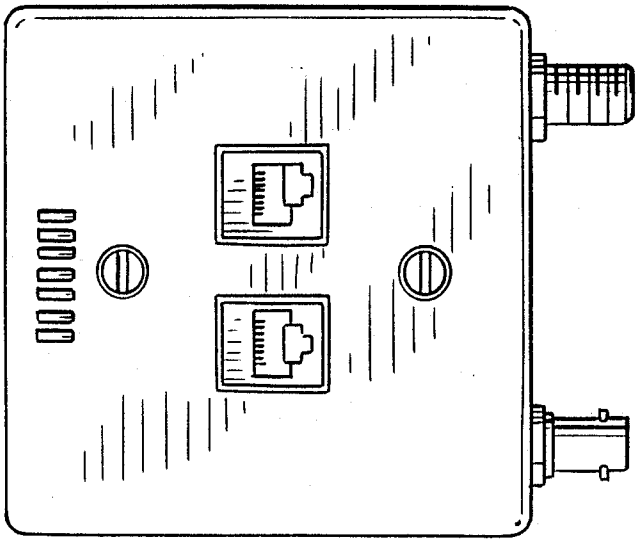

Fig. 3.

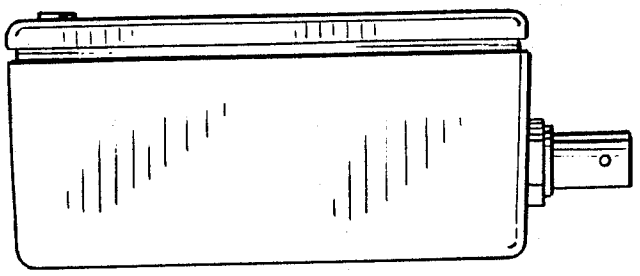

Fig. 4.

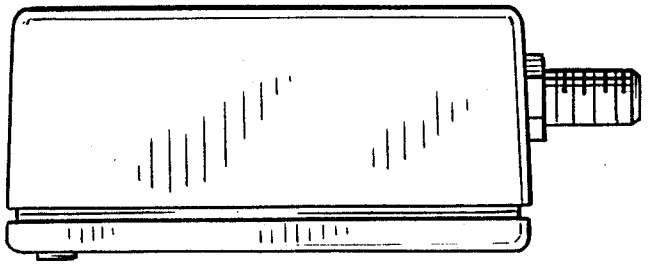

Fig. 7.

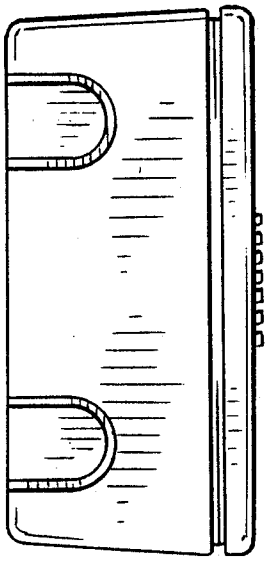

Fig. 5.

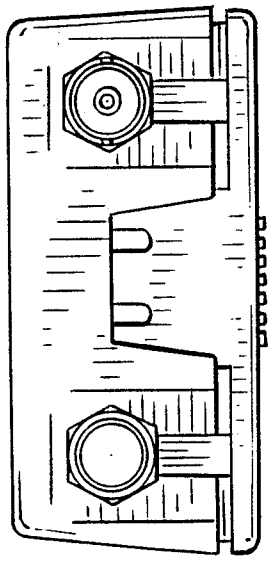

Fig. 6.

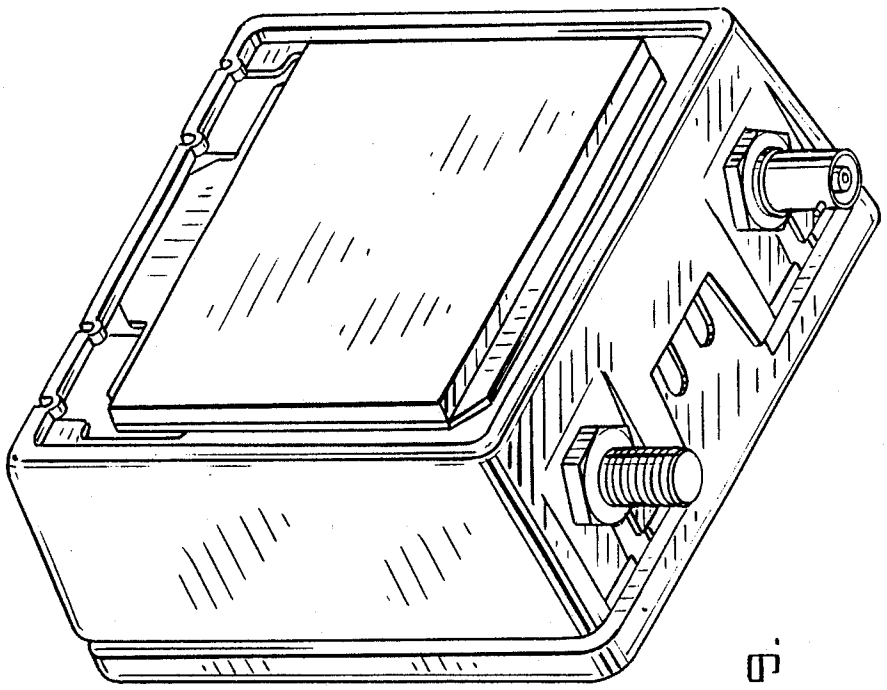

Fig. 9.