June 14, 1955 L. HIMMEL 2,710,917

DUAL BAND ANTENNA SYSTEM

Filed Sept. 14, 1948

Fig. 1

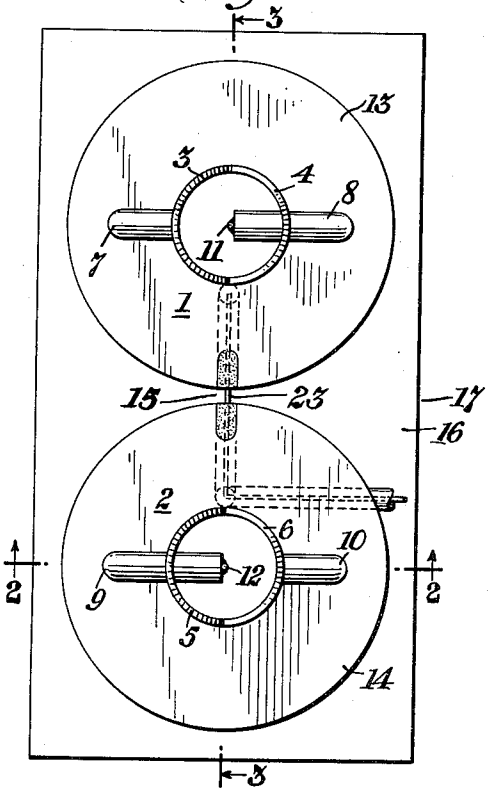

Fig. 3

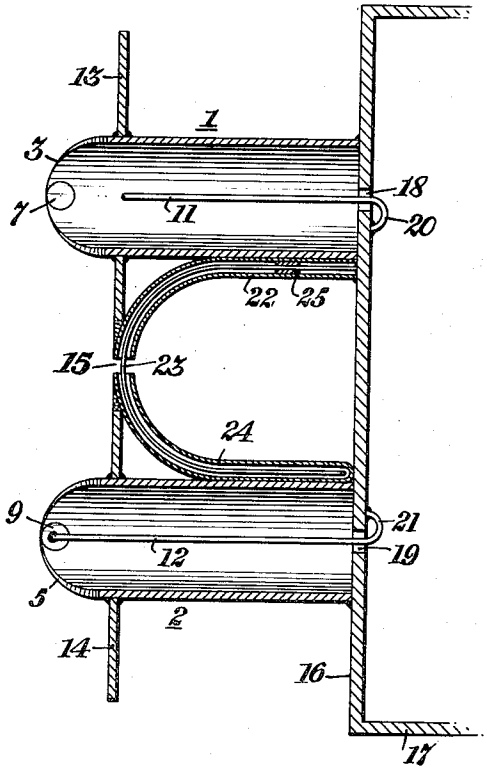

Fig. 2

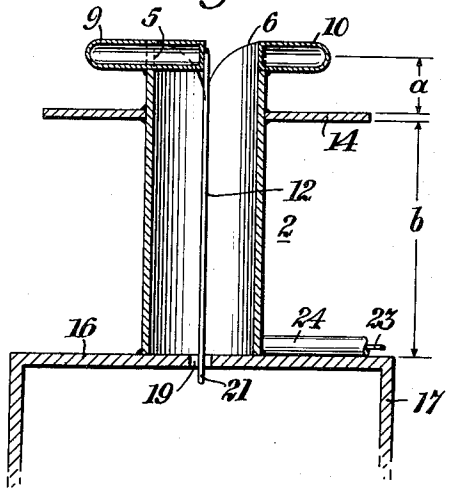

Fig. 4

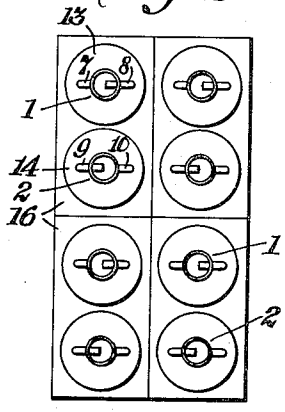

INVENTOR.
LEON HIMMEL.

BY R P Moms

ATTORNEY

United States Patent Office 2,710,917
Patented June 14, 1955

2,710,917

DUAL BAND ANTENNA SYSTEM

Leon Himmel, Montclair, N. J., assignor to International Telephone and Telegraph Corporation, a corporation of Maryland

Application September 14, 1948, Serial No. 49,234

15 Claims. (250—33.65)

This invention relates to antenna systems and more particularly to composite antennas for use at two different frequency bands.

Frequently need arises for a transmission system for communication on two rather widely separated bands. In such cases it is necessary to provide antennas to operate efficiently on both such bands. Systems have been proposed using combined antenna constructions for operation at different frequency bands but these constructions are generally not compact and do not lend themselves to simplified operation.

A principal object of the invention is to provide a simplified double frequency band antenna unit for use at ultra high frequencies.

Another object is to provide an improved antenna structure for use with parabolic reflectors and the like, wherein the antenna comprises two antenna sections each operating at a different frequency band and with all the antenna elements united in a single structural unit.

Another object is to provide a composite antenna assembly comprising at least two dipole units arranged for respective polarizations in different planes, one of the dipoles acting as a reflector for the other dipole and forming a structural unit therewith.

A feature of the invention relates to a dual frequency band antenna structure, comprising a pair of dipoles for operating at one frequency with one kind of polarization, said dipoles having individual reflectors which are interconnected to form another dipole for operation at a different frequency band and with a different kind of polarization.

Another feature relates to a composite dual frequency antenna unit of improved and simplified structural configuration, which renders it peculiarly well-suited to form a series of stacked-up units for increasing the antenna gain, while providing an efficient antenna feeding arrangement which does not materially affect the polarizations of the stacked-up units.

Another feature relates to a pair of dipoles which are supported by respective hollow pedestals that act as co-axial feed line conductors and a pair of discs integrally attached to said pedestals at predetermined spacings from the respective dipoles, said discs being in co-planar proximity to form another dipole while at the same time acting as reflectors for the first-mentioned dipoles.

A further feature relates to a composite dual frequency antenna structure, comprising a pair of dipoles for operation at a first frequency band and another dipole for operation at a second and different frequency band, said other dipole consisting of a pair of planar reflectors for the first dipoles and being mounted in co-planar proximity for center feed. The said reflectors are spaced from the first-mentioned dipoles a distance approximating one-quarter of the wave length of the operating frequency of the first band, the length of each of the first-mentioned dipoles relative to the disc diameter depending upon the relative frequencies.

A still further feature relates to a simplified structural

assembly of antenna units and respective reflectors and feed lines for operation at two distinct frequency bands, which assembly renders itself well-adapted for forming a series of stacked-up rigid antenna units.

The above-mentioned and other features and objects of this invention and the manner of attaining them will become more apparent and the invention itself will be best understood, by reference to the following description of an embodiment of the invention taken in conjunction with the accompanying drawings, wherein:

Fig. 1 is a front elevation view of an antenna arrangement according to the invention.

Fig. 2 is a sectional view of Fig. 1, taken along the line 2—2 thereof.

Fig. 3 is a sectional view of Fig. 1, taken along the line 3—3 thereof.

Fig. 4 is a schematic representation of a series of stacked units according to the invention.

In certain types of radio signalling, it is necessary to employ two antennas each operating over a different frequency band. Thus, in radar work employing magnetron oscillators, it is customary to employ so-called "L" and "S" bands where the "L" band is usually between 25 and 50 centimeters, and the "S" band is at approximately 10 centimeters wave length. Furthermore, it may be required to employ these units at the focus of a parabolic or similar reflector without undue complication of the feed lines and structural mounting. In still other cases, it may be necessary to use one unit for transmission and the other unit for reception, and in order further to increase the operating segregation, it may be necessary to have one unit polarized in a given plane, e. g. horizontal, and the other unit polarized in a different plane, e. g. vertical. The present invention provides a structural assembly of antenna units, reflectors and feed lines, which is particularly well-suited to meet the various operating requirements above-mentioned, while at the same time enabling the finished antenna to be structurally rigid and readily capable of being stacked up in two or more similar sections.

Referring to the drawing, the composite dual frequency band antenna assembly comprises a pair of tubular metal pedestals 1, 2, the upper ends of which are cut or notched to form each pedestal with a pair of spaced lugs 3, 4, and 5, 6. Passing through the lugs 3 and 4, and rigidly united thereto as by soldering, brazing, welding, or the like, are tubular metal members 7, 8. Likewise passing through the lugs 5 and 6, and rigidly attached thereto, are similar tubular metal members 9, 10. All the members 7, 8, 9, 10, are such that the portions of their lengths extending radially outward from the respective pedestals are equal. However the members 8 and 9 extend inwardly of their respective pedestals to approximately the center thereof where they can be soldered or welded to their respective central feed conductors 11, 12. Thus pedestal 1 and its conductor 11 form a co-axial feed line for the antenna elements 7 and 8 which constitute a dipole or half-wave antenna; and the pedestal 2 and its central conductor 12 likewise form a co-axial feed line for the antenna elements 9, 10, which likewise constitute a dipole or half-wave antenna.

Also rigidly united to pedestal 1 by soldering, welding or otherwise, is a circular metal disc 13. A similar metal disc 14 is likewise rigidly attached to pedestal 2. These discs 13 and 14 are attached to their respective pedestals so as to be co-planar, and are spaced from their respective dipoles 7, 8, and 9, 10, by a distance *"a"* (Fig. 2) which is equal approximately to one-quarter the wave length of the operating frequency of the said dipoles. The discs 13 and 14 are of such diameter as to be in very close proximity separated by a gap 15. In accordance with an-

other feature of the invention, the discs **13**, **14**, serve as reflectors for the dipoles **7**, **8**, and **9**, **10**.

The pedestals **1**, **2**, can be rigidly attached to a metal plate **16** which can form the front wall of a rectangular wave guide **17** of suitable dimensions related to the operating frequency band of the dipoles **7**, **8**, **9**, **10**. The plate **16** has a pair of apertures **18**, **19**, through which the central co-axial feed line conductors **11** and **12** respectively pass and terminate in respective probes or small inductive loops **20**, **21**, located within the wave guide **17**.

Discs **13**, **14**, in addition to acting as reflectors for the dipoles **7**, **8**, **9**, **10**, also form a second half-wave dipole, and the diameter of each disc is chosen so as to be approximately one-quarter wave length at the operating frequency of the dipole formed by these two discs. In accordance with a further feature of the invention, the distance "*b*" is equal approximately to one-quarter wave length of the operating frequency energy of the dipole formed by the discs **13**, **14**, and therefore the portion of the pedestal between the discs and the plate **16** has little effect on the operating impedance of the disc dipole. It should be observed that plate **16**, in addition to forming a wall of the wave guide, also acts as a reflector for the dual disc dipole. Preferably the disc dipole **13**, **14**, is center fed, and for this purpose a metal pipe **22** can be welded to the pedestal **1** and with its upper end curved and welded to the periphery of disc **13**. A center conductor **23** passes through the pipes **22** and **24** to form a co-axial feed line therewith. The similar metal pipe **24** is welded to pedestal **2** and with its upper end curved and welded to the periphery of disc **14**. The wire **23** and pipes **22** and **24** therefore form a co-axial feed line for the center feeding of the dipole **13**, **14**, and enables the disc dipole to be matched, for example, to a 50-ohm line with a voltage standing-wave ratio of less than 1.3 over at least a 20% band width. The pattern of the dual disc dipole is very similar to that of a normal half-wave dipole and reflector, since in this case the plate **16** acts as the reflector for the disc dipole.

For tuning purposes a short circuit may be provided between wire **23** and tube **24** as indicated at **25**. In case this positions the disc at the juncture of tube **22** and disc **13** the entire line defined by tube **22** may be eliminated.

From the foregoing construction it will be seen that the entire antenna assembly forms a rigid structural unit in which the pedestals **1** and **2** not only act as coaxial feed line conductors for the respective antenna sections, but also support the entire antenna assembly as a unit.

In the particular arrangement as shown, the disc dipole **13**, **14** and reflector **16** are vertically polarized, while the dual dipole **7**, **8** and **9**, **10**, is horizontally polarized.

With this arrangement it is possible to stack-up a series of similar units, and such an arrangement is schematically illustrated in Fig. 4, wherein parts identical with those of Figs. 1 to 3 bear the same designation numerals. This will provide for a vertical and horizontal concentration of energy.

While I have described above the principals of my invention in connection with specific apparatus, it is to be clearly understood that this description is made only by way of example and not as a limitation to the scope of my invention.

What is claimed is:

1. An antenna arrangement, comprising, a first antenna for operation over a selected frequency band, feed line means for said first antenna, a reflector for said first antenna spaced a predetermined distance therefrom in a given direction, feed line means connected to said reflector for operation of said reflector as a second antenna over a different frequency band from said first frequency band, and a second reflector for said second antenna spaced therefrom a predetermined distance in said given direction.

2. An antenna arrangement, comprising, a first antenna for operation on a selected frequency band, feed line means for said first antenna, a second antenna for operation on a different frequency band from said first frequency band, said second antenna forming a reflector for said first antenna, a reflector for said second antenna, and means to support said second antenna between the first antenna and said reflector, a common tubular pedestal to which both antennas are attached said pedestal forming one of the conductors of the feed line for the first antenna, and separate feed line means for said second antenna.

3. An antenna arrangement according to claim 2 in which the said pedestal forms the outer conductor of a coaxial feed line for the first antenna.

4. An antenna arrangement according to claim 2 in which said second antenna is comprised of a pair of metal members which form a reflector for the first antenna.

5. An antenna arrangement according to claim 2 in which said pedestal is attached at its lower end to a metal plate which forms said reflector for said second antenna, said metal plate also forming one of the walls of a wave guide which feeds said first antenna.

6. An antenna arrangement, comprising a dipole, a reflector plate for said dipole, feed line means connected to said plate to cause it to act as a second antenna while acting as a reflector for said dipole, a tubular metal pedestal passing through said plate and to which it is rigidly attached, said dipole being rigidly attached to the upper end of said pedestal, a central feed line conductor passing through said pedestal to form therewith a coaxial line, and a wave guide feeding said coaxial line, one wall of said guide serving as a reflector for said second antenna.

7. An antenna arrangement, comprising, a pair of dipoles, a pair of tubular metal pedestals to which said dipoles are respectively attached, a pair of metal members also respectively attached to said pedestals to form reflectors for said pair of dipoles, and feed line means connected to said pair of metal members to cause them to act as another dipole operating at a different frequency band from the frequency band of the said pair of dipoles, and a reflector for said other dipole.

8. An antenna arrangement, comprising, a pair of dipoles, tubular metal pedestals to which said dipoles are respectively attached, center conductors passing through each of said pedestals to form therewith coaxial feed lines to said dipoles, a pair of metal members attached respectively to the peripheries of said pedestals to form another dipole having a different operating frequency band from the frequency band of the first pair of dipoles, said metal members also acting as reflectors for the said pair of dipoles, and another metal member connected to said pedestals and acting as a reflector for said other dipole.

9. An antenna arrangement, comprising, two first dipoles, a second dipole, a reflector for said second dipole, a pair of tubular metal pedestals along which said dipoles and reflector are integrally attached at spaced intervals, said second dipole being located between the first dipoles and said reflector and also acting as a reflector for the first dipoles, said first and second dipoles being dimensioned for operating at respectively different frequency bands, the spacing between the first dipoles and second dipole along said pedestal being substantially one-quarter wave length at the operating frequency of the first dipoles, and the spacing between said second dipole and said reflector being substantially one-quarter wave length at the operating frequency of the second dipole.

10. An antenna arrangement, comprising a metal plate, a pair of tubular metal pedestals attached to said plate, a first metal disc attached to the first pedestal in spaced relation to said metal plate, a second metal disc attached to the second pedestal in spaced relation to said metal plate, a first dipole attached to the first pedestal above said first disc, a second dipole attached to the second pedestal above the second disc, a conductor passing through the first pedestal and forming therewith a coaxial

feed line to the first dipole, a conductor passing through the second pedestal and forming therewith a coaxial feed line to the second dipole, said discs being attached to said pedestals so as to be substantially co-planar, and feed line means connected to the adjacent edges of said discs for feeding them as a separate dipole having an operating frequency band different from the operating frequency band of said first and second dipoles.

11. An antenna according to claim 10 in which said discs are spaced on their pedestals from the respective dipoles to act as reflectors therefor, said discs being spaced from said metal plate so that said metal plate acts as a reflector for said disc dipole.

12. An antenna arrangement according to claim 10 in which said metal plate also forms a wall of a wave guide feeding said coaxial lines.

13. An antenna arrangement according to claim 10 in which said first and second dipoles each comprise a pair of radially extending arms from said pedestals and said metal discs are circular.

14. An antenna arrangement comprising a pair of tubular metal pedestals each of said pedestals having at its upper end a pair of radially extending dipole arms, a circular metal disc attached to each of said pedestals in spaced relation to said dipole arms to form respective

reflectors therefor, a metal plate attached to the lower end of said pedestals, means to feed said discs to cause them to act as a dual disc dipole, said metal plate forming a reflector for said dual disc dipole and a support for said pedestals.

15. An antenna arrangement comprising a first antenna assembly for operating at a given frequency band including two relatively closely spaced antennas, separate reflectors for each of said closely spaced antennas, and means for energizing said antennas at said given frequency band, and a second antenna assembly for operating at a different frequency band comprising said separate reflectors, and means for energizing said separate reflectors in phase opposition with energy in said different frequency band.

References Cited in the file of this patent

UNITED STATES PATENTS

2,255,520	Schuster	Sept. 9, 1941
2,268,640	Brown	Jan. 6, 1942
2,474,480	Kearse	June 28, 1949

FOREIGN PATENTS

520,628	Great Britain	Apr. 30, 1940