A. S. SPIEGEL.

METHOD AND APPARATUS FOR THE MANUFACTURE OF TWO COLORED ROOFING.

APPLICATION FILED DEC. 2, 1915.

1,194,890.

Patented Aug. 15, 1916.

2 SHEETS—SHEET 1.

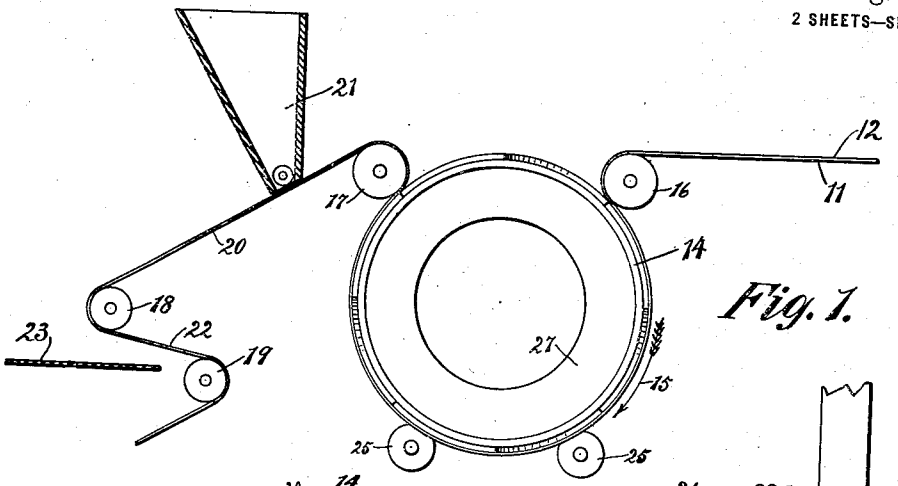

Fig. 1.

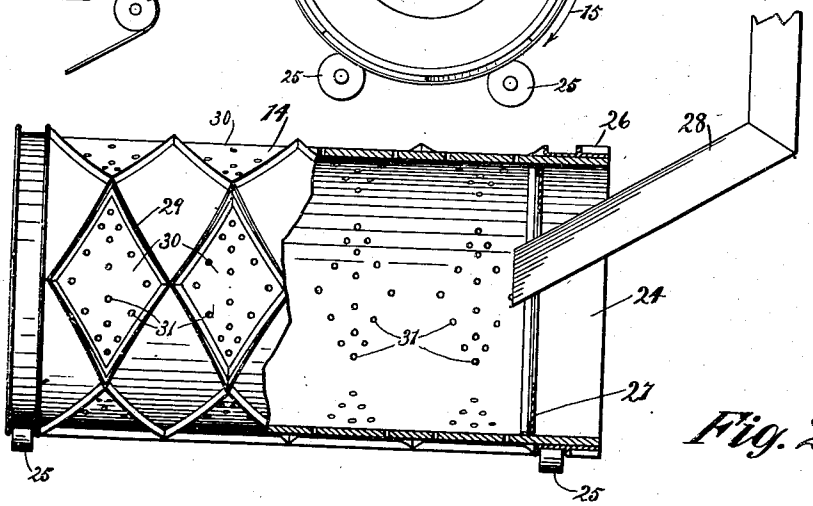

Fig. 2.

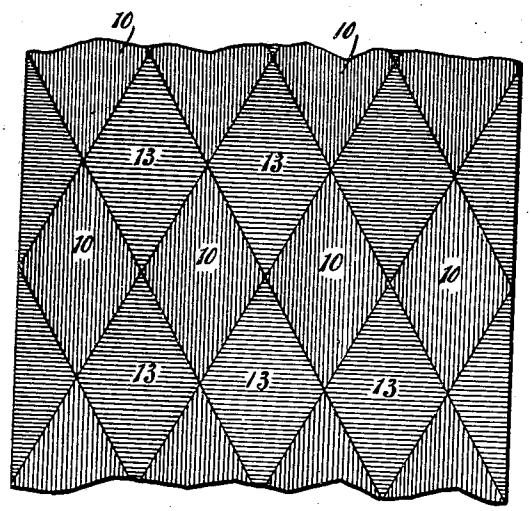

Fig. 3.

Inventor:
Alexander S. Spiegel.
By Gillson & Gillson
Atty's.

A. S. SPIEGEL.

METHOD AND APPARATUS FOR THE MANUFACTURE OF TWO COLORED ROOFING.

APPLICATION FILED DEC. 2, 1915.

1,194,890.

Patented Aug. 15, 1916.

2 SHEETS—SHEET 2.

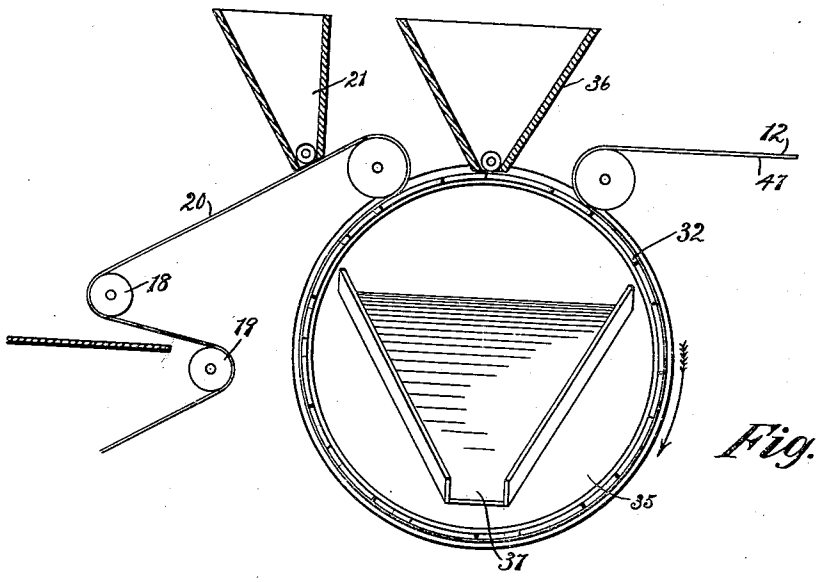

Fig. 4.

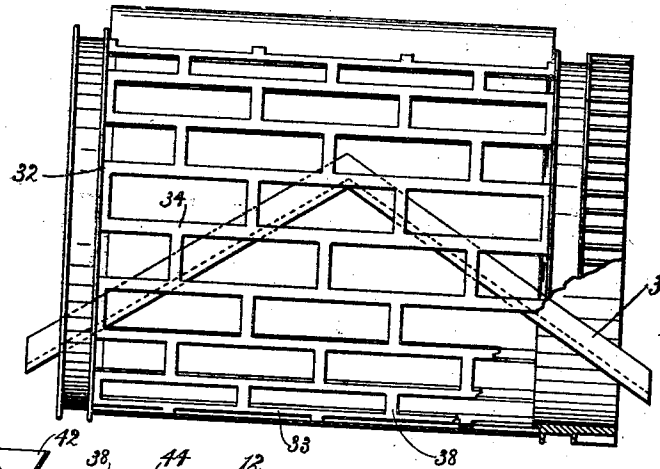

Fig. 5.

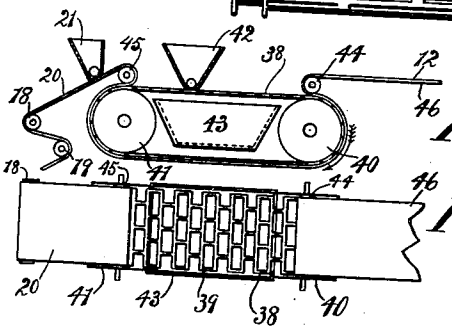

Fig. 6.

Fig. 7.

Inventor:
Alexander S. Spiegel
By Gillson & Gillson Attys.

UNITED STATES PATENT OFFICE.

ALEXANDER S. SPIEGEL, OF CHICAGO, ILLINOIS, ASSIGNOR TO THE FIRM OF SPIEGEL PATENT COMPANY, OF CHICAGO, ILLINOIS, COMPOSED OF ALEXANDER S. SPIEGEL AND LOWELL F. LINDLEY, BOTH OF CHICAGO, ILLINOIS.

METHOD AND APPARATUS FOR THE MANUFACTURE OF TWO-COLORED ROOFING.

1,194,890. Specification of Letters Patent. Patented Aug. 15, 1916.

Application filed December 2, 1915. Serial No. 64,680.

To all whom it may concern:

Be it known that I, ALEXANDER S. SPIEGEL, a citizen of the United States, and resident of Chicago, county of Cook, and State of Illinois, have invented certain new and useful Improvements in Methods and Apparatus for the Manufacture of Two-Colored Roofing, of which the following is a specification, and which are illustrated in the accompanying drawings, forming a part thereof.

The invention relates to prepared roofing, and has for its object to provide an improved method and apparatus for the manufacture of prepared roofing which is surfaced with grits of different colors, in accordance with a definite pattern. Patent No. 1,082,364, dated December 23rd, 1913, discloses an apparatus for coating different portions of the surface of a prepared roofing with different materials. By using grits of contrasting colors it is accordingly possible to produce an ornamental effect, as a design resembling a tile or shingled roof, with single layers of prepared roofing. The low cost of producing an ornamental roof in this way, and the satisfactory character of the roof covering, have created such a large demand for these two-colored prepared roofings that an improved method and apparatus for their production have been greatly desired.

It has been proposed to deposit the grit of one color in straight or curved lines by permitting the grit to flow in separate streams upon the adhesive surface of the moving sheet and to then deposit grit of another color over the entire surface of the sheet with the expectation that it will be retained only in those portions of the pattern which are not covered by the first deposit. However, this proposed method is limited in its application for use only in connection with those designs or patterns wherein one of the colors is extended in continuous lines having a general direction which is parallel with the length of the sheet, and even in these patterns it has been found impracticable to obtain the desired confinement of the grits of the different colors to their respective portions of the pattern, or to effect a satisfactory covering of the entire surface with the two grits.

The present invention contemplates an initial deposit of the grit of one color upon certain portions of the adhesive surface of the sheet, and a subsequent deposit of the other grit over the entire surface of the sheet, but both grits are to be provided in quantities sufficiently in excess of those required to insure a satisfactory covering and the grit first deposited is to be definitely confined in its application to the precise portions of the surface of the sheet where its adherence is desired. By this means there is no intermixture of the two colors, and a complete covering of the entire surface, in strict accordance with a definite pattern, is obtained.

In the accompanying drawings, Figure 1 is a detail side view of one form of apparatus provided by the invention, some of the parts being omitted; Fig. 2 is a front elevation partly in section, showing a drum or cylinder employed in the apparatus illustrated in Fig. 1, with means for maintaining a supply of the grit of one color within the drum; Fig. 3 is a plan view showing the completed roofing sheet when coated with two colors of grit, in accordance with the particular pattern obtained by the use of the specific form of apparatus illustrated in Fig. 2; Figs. 4 and 5 are similar to Figs. 1 and 2, respectively, but show a different form of the apparatus; Fig. 6 is similar to Figs. 1 and 4, but is drawn to a smaller scale and shows still another form of the apparatus; and Fig. 7 is a plan view of the apparatus illustrated in Fig. 6, with some of the parts removed.

In accordance with the improved method provided by the invention, a quantity of the particles of grit of one color are deposited upon definitely restricted areas or sections, as 10, of the tacky surface of a roofing sheet, as 11, 46 or 47, which is freshly coated upon one side with a layer 12 of heated asphalt. Preferably the quantity of particles of grit supplied for this purpose is greatly in excess of that required to afford a complete covering of the tacky surface in the areas or sections 10. Provision is accordingly made for inverting the sheet to permit the surplus to fall by gravity away from the sheet. Particles of grit of another color are then supplied over the entire surface of the sheet in sufficient quantity to insure that the remaining areas or sections, as 13, will be completely coated with the adhering particles.

The last-mentioned grit is preferably also supplied in excess, provision being made for again inverting the sheet to permit the removal of the surplus by gravity.

In carrying out the said process with apparatus of the form illustrated in Figs. 1 and 2, the sheet 11, having the freshly applied coating 12 of heated asphalt, is extended about a drum 14. This drum rotates with the travel of the sheet, as in the direction indicated by the arrow 15, on Fig. 1. Guide rolls 16, 17, are provided to insure the engagement of the sheet with the drum 14 throughout a considerable proportion of its circumference. As shown, these guide rolls are so positioned that the sheet 11 extends under the drum 14 and is engaged with both its descending and ascending sides, and does not leave the drum until it has extended over the same for a sufficient distance to permit particles of grit which are not adhering to the surface of the sheet to fall away from the same by gravity. Additional guide rolls 18 and 19 serve for the extension of the sheet in an inclined position, as at 20, beneath a hopper 21, and in an inverted position, as at 22, over an appliance, as the table 23, for receiving particles of grit delivered from the hopper 21 in excess of those required to complete the coating.

The drum 14 may be constructed with open ends, as 24. In that event the drum is supported upon rollers, as 25, which engage the same adjacent its opposite ends, and is rotated by the engagement of a pinion (not shown) with an annular set of gear teeth 26 which extend about the drum at one end. Instanding annular flanges, as 27, are provided near the ends of the drum for maintaining a quantity of grit within the drum. In order that this grit may be continuously supplied during the rotation of the drum, a delivery chute, as 28, extends into the drum through one of its ends.

The confinement of the grit first deposited to definitely restricted areas, as 10, of the surface of the sheet 11, is obtained by the extension of a flange or rib 29 over the exterior of the drum to form pockets, as 30. Each of these pockets communicates with the interior of the drum through the liberal provision of openings, as 31, in that portion of the peripheral wall of the drum 14 which constitutes the floor of the pocket. The pockets 30 conform in shape to the pattern desired upon the finished sheet. Those shown are of diamond shape and serve for producing the French tile effect shown in Fig. 3, where the sections 10 and 13 are coated with grits of different colors.

During the rotation of the drum 14 the contained grit passes through the openings 31 and completely fills the corresponding pocket 30, while the pocket is under the drum, whereas all of the said material, except that which adheres to the surface of the traveling sheet 11, returns to the interior of the drum through the openings 31, as the pocket approaches the upper side of the drum. A complete covering of the desired portions of the sheet is thereby obtained without waste of the material. Furthermore, the extension of the flange or rib 29 entirely about the pocket 30, and the engagement of the edge of this flange with the tacky surface of the sheet, insures that the deposit of the grit upon the surface of the sheet is definitely confined to certain restricted areas or sections. The flange or rib 29, which forms the side walls of the pockets 30, may have a sharp edge which makes contact with the asphalt layer 12 of the sheet without greatly depressing its surface.

Grit of a color which preferably contrasts with that of the grit supplied to the drum 14, is deposited over the entire surface of the sheet as it passes beneath the hopper 21. This grit adheres to the sheet only in those sections, as 13, which have not been covered by the grit supplied from the drum 14,—the excess of the grit last supplied falling from the sheet during its travel in an inverted position between the guide rolls 18 and 19, and being collected by any suitable appliance, as the table 33.

Figs. 4 and 5 illustrate the use of a drum 32 having its peripheral wall, 38, apertured in accordance with the pattern desired upon the finished roofing sheet. As shown, the wall 33 of the drum 32 is entirely cut away, except in a series of connected lines or sections 34, where the first deposit of grit is to be made upon the tacky surface of the sheet. The drum 32 may also be formed with open ends, as 35, in which case it is conveniently supported and driven in the same manner as the drum 14. In this instance, however, a quantity of the grit of the color to be first applied to the sheet, as 47, is delivered on to the exterior of the drum 32 from above, as by a feed hopper 36. During the rotation of the drum 32, a covering of grit is retained upon the solid portions 34 of the wall of the drum during the travel from the hopper 36, until the grit is engaged with the tacky surface of the roofing sheet 47. All that part of the grit which is supplied from the feed hopper 36 and is not retained by the solid portions 34 of the wall of the drum, falls into the interior of the drum and is preferably discharged through its open ends, as 35, as by the provision of inclined chutes 37. This surplus of grit may be returned to the feed hopper 36 by any convenient means (not shown). The second color of grit is supplied from the feed hopper 21 in the same manner as when the drum 14 is used.

In the form illustrated in Figs. 6 and 7, an endless belt 38 takes the place of the

drum 32. This belt is apertured in the same manner, as the wall of the drum 32, its solid portions, as 39, corresponding to those portions or areas of the roofing sheet upon which the first deposit of grit is desired. The belt 38 travels over and between a pair of horizontally disposed rollers 40 and 41, and grit is supplied to the same from above, as by a feed hopper 42. That part of the grit which is not retained by the solid portions 39 of the belt falls into a receiver 43. This receiver is preferably located between the upper and lower lengths of the belt 38. The material collected therein is returned to the feed hopper 42 by any convenient mechanism, not shown. Guide rollers 44 and 45 serve for deflecting the traveling sheet of roofing material, as 46, for its engagement with the belt 38 during its travel downwardly about the roller 41, horizontally between the under sides of the two rollers 40 and 41, and thence upwardly about the side of the roller 40. The second color of grit is supplied from the feed hopper 21 in the manner already described with reference to the two forms of apparatus illustrated in Figs. 1 and 2, and in Figs. 4 and 5.

Either form of the apparatus illustrated serves for the application of the grit of each color in sufficient quantity to insure a complete covering of the adhesive side of the roofing sheet, as 11, 46 or 47. Furthermore, in either case any excess of the grit first applied is allowed to fall from the sheet, and its intermixture with the grit of the other color is effectually prevented. The two forms of apparatus illustrated in Figs. 4 and 5, and in Figs. 6 and 7, serve for the definite confinement of the grit first deposited to selected portions of the roofing sheet without modifying the surface of the layer 12 of adhesive material in any manner.

I claim as my invention,—

1. The method of making two-colored grit surfaced prepared roofing which consists in applying grit of one color to different portions comprising a part only of the adhesive face of a sheet of roofing material in excess of the quantity required to coat the said portions, permitting the surplus of grit so applied to fall away from the face of the sheet by gravity, and in then applying grit of another color to the entire face of the sheet.

2. The method of making two-colored grit surfaced prepared roofing which consists in depositing grit of one color upon sharply outlined separated areas of the adhesive surface of a sheet of roofing material in excess of the quantity required to coat the said areas, inverting the sheet to remove the surplus of grit so deposited, turning the sheet and in then depositing grit of another color upon the entire upwardly facing surface of the sheet.

3. In a machine of the kind described, in combination, a horizontally disposed rotary drum having a reticular peripheral wall, means for guiding a strip of roofing material about the drum, said guiding means being so arranged that the strip is inverted during its engagement with the drum, means for delivering grit surfacing material upon one side of the said peripheral wall of the drum and a second means for delivering grit surfacing material upon the strip of roofing material after leaving the drum.

4. In a machine of the kind described, in combination, a horizontally disposed rotating drum having a reticular peripheral wall, a pair of separated rolls extending over the drum for guiding a strip of roofing material about the sides and underneath the drum, means for delivering grit surfacing material upon the outside of the said peripheral wall of the drum between the said guide rolls, means within the drum for receiving the grit surfacing material which passes through the openings in the said wall of the drum and means for delivering grit surfacing material upon the said strip of roofing material after leaving the drum.

5. In a machine of the kind described, in combination, a horizontally disposed reticular endless carrier, a pair of separated rolls adjacent the carrier for guiding a strip of roofing material to make face contact with the said carrier, means for delivering grit surfacing material upon the said carrier between the said guide rolls and means for delivering grit surfacing material upon the face of the said strip of roofing material after its engagement with the said carrier.

6. In a machine of the kind described, in combination, a moving plate adapted to make face contact with a part of the tacky surface of a traveling prepared roofing sheet, means for depositing a layer of grit upon the surface of the plate in advance of such contact and means for depositing a layer of grit upon the said surface of prepared roofing sheet after its contact with said plate.

7. The method of making two-colored grit surfaced prepared roofing which consists in depositing grit of one color upon separated areas of the adhesive surface of a sheet of roofing material in excess of the quantity required to coat the said areas, inverting the sheet to remove the surplus of grit so deposited, turning the sheet and in then depositing grit of another color upon the entire upwardly facing surface of the sheet.

ALEXANDER S. SPIEGEL.