May 25, 1965 J. WARSHAWSKY 3,185,838

FRICTION CONTROLLED SLIDABLE AND ROTATABLE MOUNTING FOR LAMPS

Filed March 6, 1963

Fig. 1.

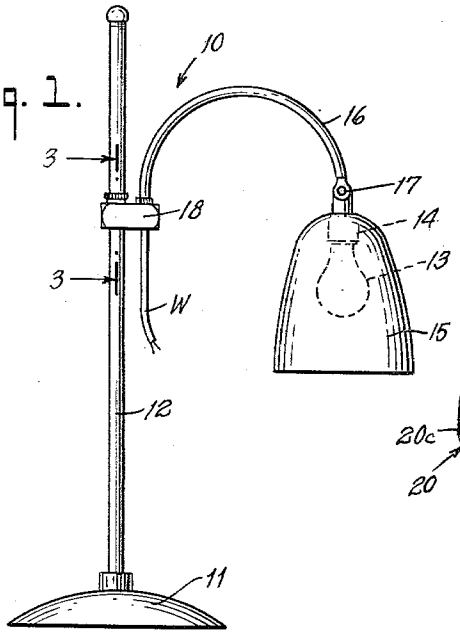

Fig. 2.

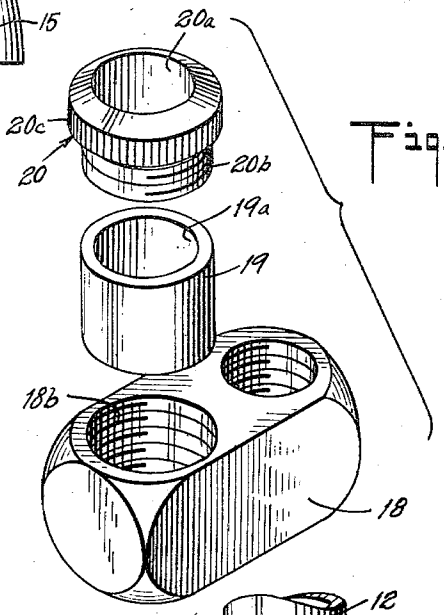

Fig. 3.

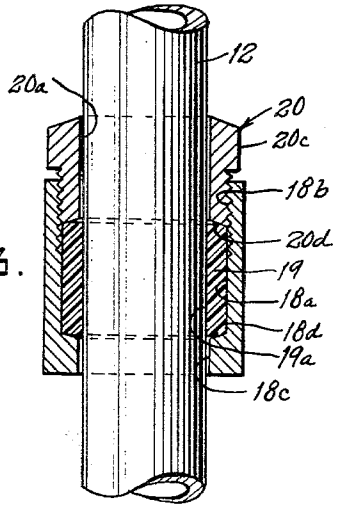

Fig. 4.

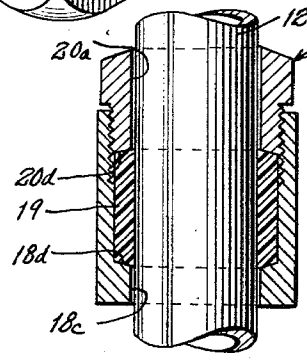

INVENTOR.
JEROME WARSHAWSKY

BY

Barnett & Barnett
ATTORNEYS

United States Patent Office 3,185,838 Patented May 25, 1965

3,185,838

FRICTION CONTROLLED SLIDABLE AND ROTATABLE MOUNTING FOR LAMPS

Jerome Warshawsky, 3285 Bertha Drive, Baldwin, N.Y.

Filed Mar. 6, 1963, Ser. No. 263,317
3 Claims. (Cl. 240—81)

This invention relates to table and floor lamps and more particularly is directed to an improved means for adjustably mounting a light source for axial and rotatable movement with respect to a vertically disposed cylindrical support.

Among the objects of the invention is to provide an improved clutch means for sliding along and rotating with respect to a cylindrical support member, which shall comprise few and simple parts arranged and constructed in a novel manner to require a minimum of time and labor for assembly in quantity low cost production, which clutch shall be self-lubricating and non-abrasive to insure against scratching or otherwise marring the polished finish of the cylindrical support particularly when made of brass, which will not bind or freeze the parts together and yet will permit easy adjustment of the tightness between the movable parts to meet weight requirements of the light source and associated structure and also satisfy individual needs which shall be rugged to withstand rough usage and efficient and practical to a high degree in use.

Other objects of the invention will in part be obvious and in part hereinafter pointed out.

The invention accordingly consists of features of construction combination of elements and arrangement of parts which will be exemplified in the construction hereinafter disclosed the scope of the application of which will be indicated in the claims following:

In the accompanying drawing in which an illustrative embodiment of the invention is shown:

FIG. 1 is a side elevational view of a table lamp constructed to embody the invention having a vertically upstanding cylindrical support along which a clutch member carrying a light source is slidably and rotatably mounted.

FIG. 2 is an enlarged exploded perspective view of the clutch member shown in FIG. 1 removed from assembly on the cylindrical support showing details of construction.

FIG. 3 is a fragmentary vertical sectional view taken along line 3—3 in FIG. 1 showing the clutch parts in position for relatively loose operation, and

FIG. 4 is a fragmentary vertical section similar to FIG. 3 but showing the parts in position for tight operation.

Referring in detail to the drawing, 10 generally denotes a lamp or lighting unit which may be of a floor standing type or as here shown a desk or table type wherein a light source is mounted for vertical adjustment along and rotatable about a substantially vertically disposed cylindrical support 12 upstanding from a base 11. The light source may be of any desired structure and design here shown to comprise an electric bulb 13 mounted in a socket 14 which may carry a shade 15 and be connected to terminate an arm 16 by a swivel fitting 17. The opposite end of arm 16 is carried by a clutch member 18 and attached thereto in any well understood manner to receive electric wiring W therethrough for energizing bulb 13. Clutch member 18 may be constructed to carry more than one arm 16 or equivalent element arranged symmetrically or otherwise about support 12.

Clutch member 18 is formed with a bore 18*a* having one end threaded as at 18*b* and an opposite end 18*c* of reduced diameter. A bushing 19 snugly fits bore 18*a* and in turn is formed with an axial bore 19*a* snugly receiving support 12 for rotation thereon and axial movement therealong. Compression nut 20 having an axial bore 20*a* is formed with an externally threaded end 20*b* for engaging clutch member threads 18*b* and may be manipulated by knurled head 20*c* to abut and exert pressure upon bushing 19.

As is clear from FIG. 3 the diameter of bore 20*a* is substantially equal to the reduced diameter of bore end 18*c* the latter and bore 20*a* being sufficiently larger than the outside diameter of support 12 to prevent contact therewith in operation of clutch member 18.

A feature of the invention is the elimination of drawbacks inherent in existing devices by providing controlled sliding of clutch member 18 vertically along support 12 whereby the latter is sufficiently gripped to counteract the combined weight of clutch member 18 and the light source structure carried thereby which controlled sliding incorporates simple and efficient means for adjusting the degree of said gripping in accordance with requirements. Thus bushing 19 is formed of an elastomeric resinous plastic material having non-compressible semi-rigid deformable non-adhesive moderately self-lubricating non-abrasive properties and is provided of sufficient length that is, axially elongated, to prevent metal against metal contact, namely, contact of bore end 18*c* and bore 20*a* with support 12 due to moments of torque exerted on clutch member 18 along an axis at right angles to that of bore 18*a*.

To accomplish these ends, bushing 19 may be made of polyethylene tubing having a hardness of 35 to 50 durometer. When used on a support 12 of ½ inch diameter, bushing 19 cut to a length of about ½ inch and having a wall thickness exceeding 1/16 inch renders satisfactory results. It is to be understood that varying the diameter of support 12 may correspondingly vary the dimensional requirements of bushing 19.

In order to facilitate the controlled sliding of clutch member 18 on support 12 whereby satisfactory operation may be obtained utilizing less critical tolerances between the coacting parts with corresponding reduction of manufacturing costs, at least one of the surfaces engaging the opposite ends of bushing 19 may be beveled inwardly.

To achieve a balanced gripping, FIGS. 3 and 4 show both such end engaging surfaces, namely, interior shoulder 18*d* of bore 18*a* and end edge 20*d* of compression nut 20, beveled inwardly to provide surfaces for simultaneously deforming the opposite ends of bushing 19 against the surface of support 12.

After the parts are made as shown in the drawing and described above, clutch member 18 is first assembled by inserting bushing 19 into bore 18*a* through threaded end 18*b* and compression nut 20 is loosely threaded into the latter. The clutch member assembly is then mounted on support 12 by inserting a free end thereof through bushing bore 19*a*. Compression nut 20 may then be tightened to the position shown in FIG. 3 wherein bushing 19 is only slightly distorted to apply a relatively small friction force between bushing 19 and support 12 for relatively free sliding movement of clutch member 18 along support 12.

In practice, support 12 in assembly with clutch member 18 may be supplied as a fitting to lamp manufacturers who complete lighting unit 10 in any of a large variety of designs and styles.

The practical operation and utility of lighting unit 10 incorporating the controlled slidable and rotatable mounting of clutch member 18 on support 12 will now be apparent. Compression nut 20 is tightened or loosened by finger manipulation of knurled head 20*c* to respectively increase or decrease the pressure exerted by bushing 19 on support 12. As compression nut 20 is tightened from the position shown in FIG. 3 to that of FIG. 4, the opposite ends of bushing 19 are deformed from their nor-

mally squared-off ends to conform to beveled surfaces 18*d* and 20*d* whereby a maximum gripping pressure is exerted on support 12. Thus compression nut 20 may be selectively tightened to provide the necessary degree of gripping to support the weight of clutch member 18 and its associated structure against downward sliding by gravity and for ease of desired operation. After the proper setting of compression nut 20 is ascertained, the height and relative position of clutch member 18 with respect to support 12 may be adjusted with relative ease.

The construction embodying the invention hereinbefore described is particularly suitable for use in quality brass lamps wherein the surfaces are customarily protected against discoloration by the application of a baked-lacquer coating. Support 12 when protected by such coating will not be marred by the sliding or rotating thereon of clutch member 18 having bushing 19 of a self-lubricating non-abrasive elastomeric plastic.

It is thus seen that there is provided an improved friction controlled slidable and rotatable mounting for lamps whereby the several objects of this invention are achieved and which is well adapted to meet the conditions of practical use.

As various possible embodiments might be made of the above invention, and as various changes might be made in the embodiment above set forth, it is to be understood that all matters herein set forth or shown in the accompanying drawing are to be interpreted as illustrative and not in a limiting sense.

Having thus described my invention, I claim as new and desire to secure by Letters Patent:

1. In a lamp construction, a non-abrasive friction controlled slide mounting comprising a cylindrical vertically disposed standard, an electrical socket and bulb for said lamp, a clutch member carrying said electrical socket and bulb rotatable on and axially slidable along said standard, said clutch member having a bore through which the standard extends, one end of said bore having a reduced diameter forming an internal shoulder, the opposite end of said bore being internally threaded, a tubular shaped bushing of elastomeric resinous plastic having non-compressible, semi-rigid, deformable, moderately self-lubricating non-abrasive properties snugly fitting said bore, and a manually adjustable compression nut having an axial bore threaded into said clutch member bore to contact said bushing and urging the latter against said internal shoulder, said compression nut bore and said reduced diameter bore being of larger diameter than the standard and the bushing being of sufficient length to minimize torque whereby said bushing is the sole contact between the standard and clutch member.

2. In a lamp construction, a non-abrasive friction controlled slide mounting comprising a cylindrical vertically disposed standard, an electrical socket and bulb for said lamp, a clutch member carrying said electrical socket and bulb rotatable on and axially slidable along said standard, said clutch member having a bore through which the standard extends, one end of said bore having a reduced diameter forming a first internal shoulder, the opposite end of said bore being internally threaded, a manually adjustable compression nut having an axial bore threaded into said clutch member bore terminating in an end surface forming a second internal shoulder spaced from said first internal shoulder, and a tubular bushing of elastomeric resinous plastic having non-compressible, semi-rigid, deformable, moderately self-lubricating non-abrasive properties snugly fitting said bore between said internal shoulders, said compression nut bore and said reduced diameter bore being of larger diameter than the standard whereby said bushing is the sole contact between the standard and clutch member, at least one of said internal shoulders being beveled inwardly to deform an abutting end of said bushing against said standard on tightening of the compression nut.

3. The lamp construction defined in claim 2 in which both of said internal shoulders are beveled inwardly.

References Cited by the Examiner

UNITED STATES PATENTS

641,748	1/00	Smith	240—81
1,557,923	10/25	Carrol	287—114
1,854,932	4/32	Gottlieb	240—81
3,048,432	8/62	Harter	287—114 X

FOREIGN PATENTS

597,892	2/48	Great Britain.

NORTON ANSHER, *Primary Examiner.*