Nov. 27, 1951 V. S. DANIELSON 2,576,214

SHOCK ABSORBING MECHANISM FOR RAILWAY DRAFT RIGGINGS

Filed Aug. 20, 1948 2 SHEETS—SHEET 1

Fig. 1

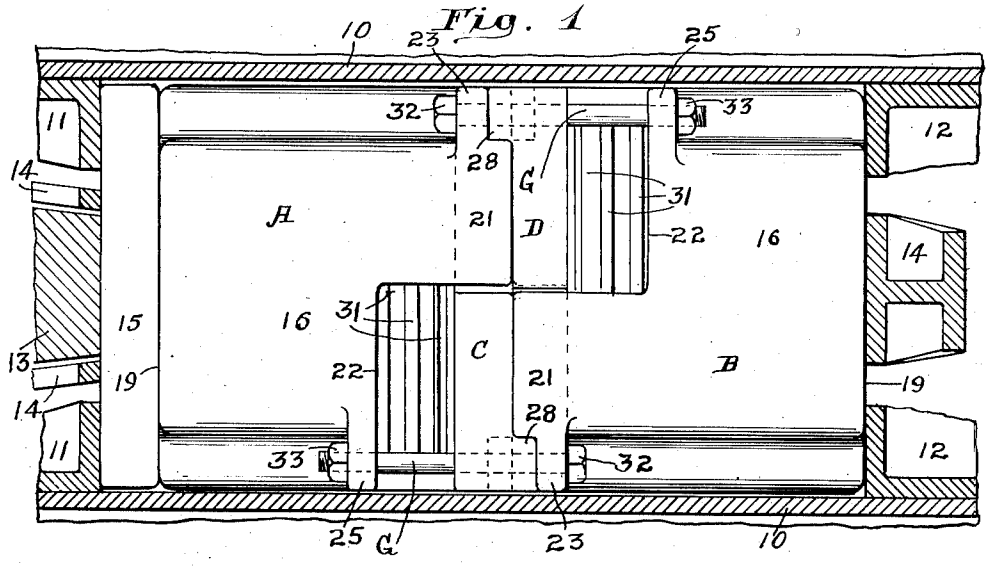

Fig. 2

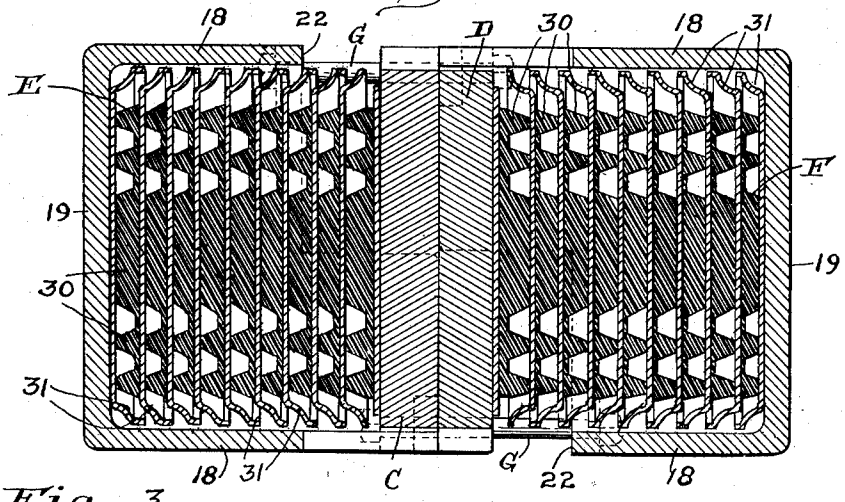

Fig. 3

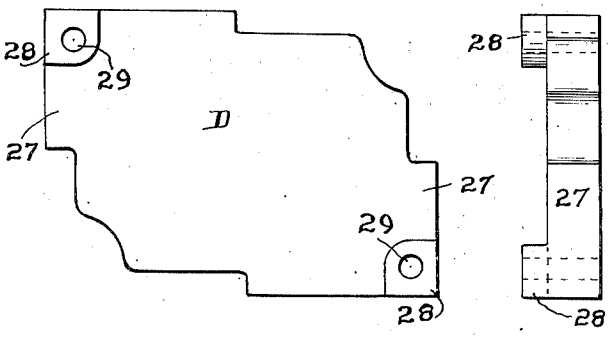

Fig. 4

Inventor
Vernon S. Danielson.
By Henry Fucks.
Atty.

Nov. 27, 1951 V. S. DANIELSON 2,576,214

SHOCK ABSORBING MECHANISM FOR RAILWAY DRAFT RIGGINGS

Filed Aug. 20, 1948 2 SHEETS—SHEET 2

Fig. 5

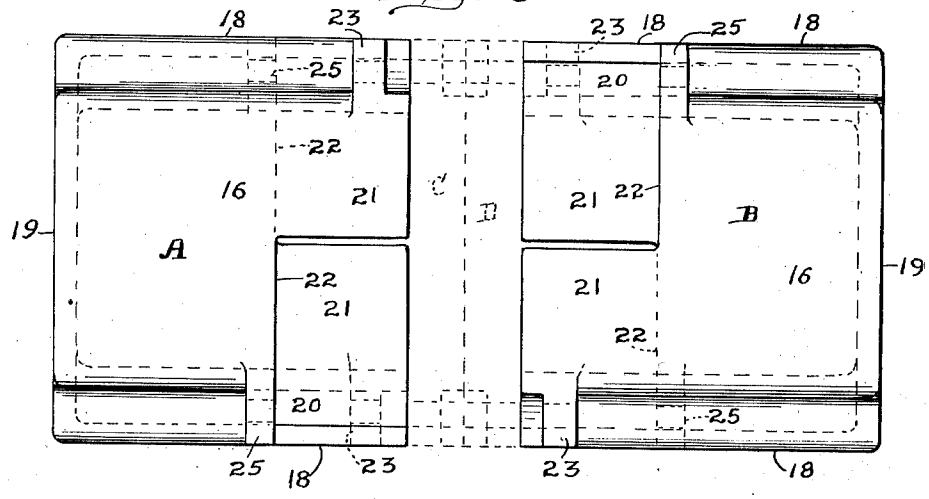

Fig. 6

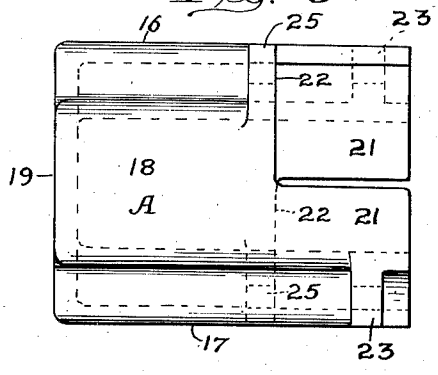

Fig. 7

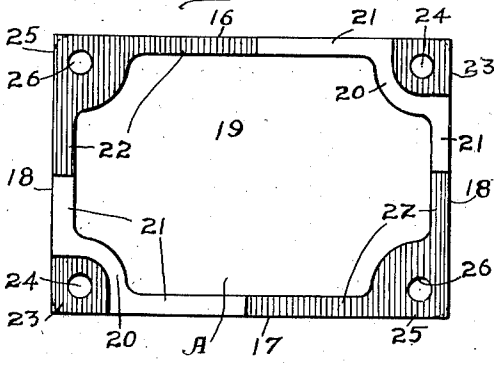

Fig. 8

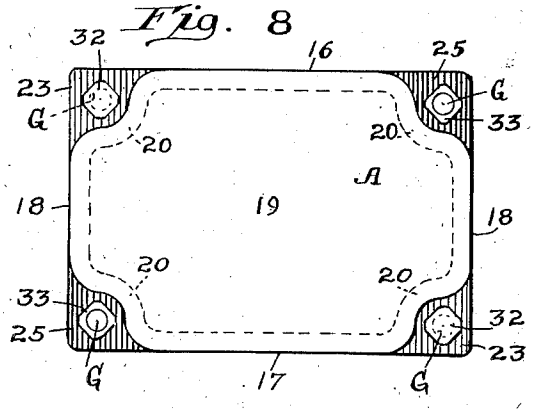

Inventor:
Vernon S. Danielson.
By
Henry Fuchs.
Atty.

Patented Nov. 27, 1951

2,576,214

UNITED STATES PATENT OFFICE

2,576,214

SHOCK ABSORBING MECHANISM FOR RAILWAY DRAFT RIGGINGS

Vernon S. Danielson, Dolton, Ill., assignor to W. H. Miner, Inc., Chicago, Ill., a corporation of Delaware

Application August 20, 1948, Serial No. 45,332

5 Claims. (Cl. 213—48)

1

This invention relates to improvements in shock absorbing mechanisms, especially adapted for draft riggings of railway cars.

One object of the invention is to provide a shock absorbing mechanism of the character indicated, comprising front and rear casings closed at their outer ends and having inwardly extending arms at their inner ends, front and rear intermediate followers actuated by the arms of the rear and front casings, respectively, and cushioning means interposed between the closed end of each casing and the follower actuated by the other casing for absorbing shocks upon relative movement of the casings toward each other, wherein simple and efficient means is provided for holding the parts of the mechanism assembled.

A more specific object of the invention is to provide a mechanism as set forth in the preceding paragraph, wherein the means for holding the mechanism assembled is in the form of retainer bolts anchored to the casings, respectively, and extending through the intermediate followers.

Other objects of the invention will more clearly appear from the description and claims hereinafter following.

In the accompanying drawings forming a part of this specification, Figure 1 is a horizontal sectional view through a portion of the underframe structure at one end of a railway car, illustrating my improved shock absorbing mechanism in connection therewith, the shock absorbing mechanism being shown in plan. Figure 2 is a longitudinal horizontal sectional view of the improved shock absorbing mechanism shown in Figure 1. Figure 3 is an elevational view of the front intermediate follower of my improved mechanism, looking from right to left in Figure 1. Figure 4 is an edge elevational view of Figure 3, looking from right to left in said figure. Figure 5 is a plan view of the front and rear casings of the shock absorbing mechanism shown in Figure 1, the casings being shown spaced apart lengthwise of the mechanism and the intermediate followers being indicated in dotted lines. Figure 6 is a side elevational view of the casing at the left hand side of Figure 5, looking upwardly in said figure. Figure 7 is an end elevational view of Figure 6, looking from right to left in said figure. Figure 8 is an end elevational view of the shock absorber of Figure 1, looking from left to right in said figure.

In said drawings, 10—10 indicate the longitudinally extending center or draft sills of a railway car underframe structure. On the inner sides, the sills 10—10 are provided with front and

2

rear stop lugs 11—11 and 12—12 commonly employed in railway draft riggings. The rear portion of the usual coupler shank is indicated by 13, to which is operatively connected a yoke 14 of well-known construction. The improved shock absorbing mechanism is disposed within the yoke 14 and a front follower 15 of the usual design disposed within the yoke cooperates with the same and the front stop lugs 11—11.

My improved shock absorbing mechanism comprises broadly front and rear casings A and B, front and rear intermediate followers C and D, front and rear cushioning elements E and F, and retainer bolts G—G for holding the mechanism assembled.

The casings A and B, which are preferably in the form of castings, are of substantially identical design, but are reversely arranged end for end. Each casing is of substantially rectangular cross section, having horizontally extending top and bottom walls 16 and 17, spaced vertical side walls 18—18, and a transverse vertical end wall 19 at its outer end. Each casing is thus closed at its outer end and open at its inner end. The closed end of the front casing A bears on the front follower 15, which, in turn, cooperates with the inner end of the coupler shank 13 and the stop lugs 11—11, and the closed end of the rear casing B cooperates with the rear stop lugs 12—12 in the manner of the usual rear follower. The interior of each casing is of substantially rectangular cross section and provides a pocket within which the corresponding cushioning element E or F is accommodated. At the four corners of each casing, that is, at the meeting points of the side and top and bottom walls, the wall portions thereof are inwardly offset, as shown most clearly in Figures 6, 7, and 8. These inwardly offset corner wall portions, which are indicated by 20—20, provide clearance for the heads and nuts of the bolts G. At its inner or open end, each casing is cut away, or recessed, at diagonally opposite, top and bottom corners, as shown most clearly in Figure 7, thereby providing a pair of longitudinally extending, top and bottom arms 21—21 which form continuations of the corresponding wall portions of the casing. As shown in Figure 7, the cut away portions include slightly more than half of the horizontal and vertical walls of the casing. Each arm 21, which includes parts of two adjacent walls of the casing, is broadly of angular cross section and has the meeting portions of the walls thereof offset inwardly to correspond with the wall portions 20—20. The transverse walls of the cut

away portions between the arms 21—21 provide stop shoulders 22—22. At the outer side of each arm 21, at the corner formed by the two angular sections thereof, is provided a lug 23 which projects outwardly and is spaced a slight distance inwardly of the outer end of said arm. The lugs 23—23 of the arms 21—21 are perforated, as indicated at 24—24, to accommodate the corresponding bolts G—G. At the outer side of each casing, at the remaining two corners thereof, which are diagonally opposite, the same is provided with laterally outwardly projecting lugs 25—25, similar to the lugs 23—23. The lugs 25—25 are perforated, as indicated at 26—26, to accommodate the bolts G—G.

As hereinbefore mentioned, the two casings A and B are reversely arranged end for end, that is, with the arms 21—21 of one casing projecting inwardly toward the other casing and slidingly engaged within the openings between the arms 21—21 of said other casing, and the lugs 23—23 of each pair of arms of each casing longitudinally aligned with the lugs 25—25 of the other casing.

The two intermediate followers C and D are of like construction, each being in the form of a relatively heavy plate having projections or extensions 27—27 at diagonally opposite corner portions thereof, fitting in the openings between the arms 21—21 of one of the casings and adapted to abut the outer ends of the arms of the other casing. The portion of the main body of the follower located between the projections 27—27 is of an outline corresponding with the interior transverse section of the casing, and is of such a size as to slidingly fit within the corresponding casing. Each follower is further provided at one side thereof with laterally projecting lugs 28—28 at the outer corners of the extensions 27—27 adapted to engage over the corresponding portions of the inwardly offset wall portions at the corners of the arms 21—21 of the cooperating casing. The lugs 28—28 are adapted to abut the lugs 23—23 of these arms in the expanded condition of the mechanism. The lugs 28—28 have openings 29—29 therethrough in alignment with the perforations 24—24 of the lugs 23—23 to accommodate the shanks of the bolts G—G.

The front intermediate follower C is engaged with the front ends of the arms 21—21 of the rear casing B and the lugs 28—28 of said follower extend rearwardly into the inwardly offset corner portion of the arms and cooperate with the lugs 23—23 thereof. The rear intermediate follower D is engaged with the rear ends of the arms 21—21 of the front casing A and the lugs 28—28 of said follower extend forwardly into the inwardly offset corner portions of said arms and cooperate with the lugs 23—23 thereof.

The cushioning element E is disposed within the front casing A between the wall 19 of said casing and the front intermediate follower C, and the cushioning element F is disposed within the rear casing B between the end wall 19 of said casing and the rear intermediate follower D. The cushioning elements E and F are of well-known design, each element, as illustrated, comprising a plurality of rubber pads 30 alternated with metal spacing plates 31.

The retainer bolts G are four in number and are arranged at the four corners of the casings A and B, being anchored to the aligned lugs 23 and 25 thereof to hold the mechanism assembled. As shown, the two bolts at two diagonally opposite corners of the casings are reversely arranged end for end with respect to the two bolts at the two remaining diagonal corners, that is, two of the bolts have the heads 32—32 at the rear ends thereof while the other two bolts have the heads at the front ends thereof. The two diagonally opposite bolts G—G, which have the heads 32—32 at the rear ends thereof, have the heads shouldered against the lugs 23—23 of the arms 21—21 of the casing B with the shanks extending through said lugs, the openings 29—29 of the front intermediate follower C and the lugs 25—25 of the front casing A, and have nuts 33—33 threaded on the front ends thereof in shouldered engagement with the lugs 25—25 of said front casing. The two diagonally opposite bolts G—G, which have the heads 32—32 at the front ends thereof, have these heads shouldered against the lugs 23—23 of the arms 21—21 of the front casing A, with the shanks thereof extending through said lugs, the openings 29—29 of the rear intermediate follower D, and the lugs 25—25 of the rear casing B, and have nuts 33—33 threaded on the rear ends thereof shouldered against the lugs 25—25 of said rear casing.

The bolts G—G and G—G serve to hold the mechanism assembled for handling, and for predetermined overall length under slight initial compression to facilitate the application of the same within the yoke 14 of the railway draft rigging in the pocket between the front follower 15 and the rear stop lugs 12—12. After the mechanism has been applied to the draft rigging, the bolts G may be either loosened or entirely removed to permit the mechanism to expand and completely fill the draft gear pocket.

In the operation of my improved shock absorbing mechanism, the same is compressed between the follower 15 and the rear stop lugs 12—12 in buff by inward movement of the coupler and yoke, and compressed against the follower 15, which is held stationary by the front stop lugs in draft by forward pulling action of the yoke on the rear casing B. As the front follower 15 moves rearwardly in buff, the front casing A is forced rearwardly therewith and the rear intermediate follower is also forced to move rearwardly by the arms 21—21 of the front casing, which arms are in engagement with said intermediate follower. The cushioning elements E and F of the front and rear casings A and B are thus compressed respectively between the front end wall 19 of the casing A and the front intermediate follower C, which at this time is held stationary, and the rear intermediate follower D and the rear end wall 19 of the casing B, the front intermediate follower being held against rearward movement by the abutment arms of the casing B, which casing is held stationary by engagement with the rear stop lugs 12—12. In draft, the operation is reversed, the rear casing B being moved forwardly by the pulling action of the yoke 14, and the front casing being held stationary by the front follower 15, the intermediate follower C, which moves with the casing B, compressing the front cushioning unit E, against the front end wall 19 of the casing A, and the rear cushioning unit F being compressed between the rear end wall 19 of the forwardly moving casing B and the rear intermediate follower D, which at this time is held stationary by the arms 21—21 of the front casing A.

Compression of the mechanism in both buff and draft is limited by engagement of the intermediate followers C and D with the limiting stop shoulders 22—22 of the front and rear casings

A and B, whereby the casings A and B, together with the intermediate followers C and D, act as a solid column to transmit the pressure, thus preventing undue compression of the cushioning elements E and F.

When the actuating force is reduced, after compression of the mechanism in either buff or draft, the tendency of the distorted rubber pads 30—30 of the cushioning elements to return to their normal shape causes the cushioning elements to expand, returning the parts to the full released position, as shown in Figures 1 and 2.

I claim:

1. In a shock absorbing mechanism, the combination with front and rear casings relatively movable toward each other; of front and rear intermediate follower members between said casings, each of said members having guide openings therethrough, said front intermediate follower member being movable in unison with said rear casing and said rear intermediate follower member being movable with said front casing; a cushioning element in each casing engaged by the corresponding intermediate follower; and securing elements connected to said casings respectively and extending through said guide openings of said intermediate followers.

2. In a shock absorbing mechanism, the combination with front and rear casings; of front and rear intermediate followers between said casings, said followers having guide openings therethrough; rearwardly extending arms on said front casing engaging said rear intermediate follower; forwardly extending arms on said rear casing engaging said front intermediate follower; cushioning elements in said front and rear casings cooperating with said front and rear intermediate followers, respectively; and securing elements connected to said front and rear casings respectively, said elements extending through said guide openings of said intermediate followers.

3. In a shock absorbing mechanism, the combination with front and rear casings; of front and rear intermediate followers between said casings, each of said followers having guide openings extending therethrough; rearwardly extending arms on said front casing engaging said rear intermediate follower; forwardly extending arms on said rear casing engaging said front intermediate follower; cushioning elements within said front and rear casings cooperating with said front and rear intermediate followers, respectively; and securing elements for holding the mechanism assembled, each of said securing elements being connected at opposite ends respectively to an arm of one of said casings and the main body portion of the other casing, said securing elements extending through said guide openings of said intermediate followers.

4. In a shock absorbing mechanism, the combination with front and rear casings; of front and rear intermediate followers between said casings, said followers having guide openings extending therethrough; rearwardly extending, laterally spaced arms on said front casing; forwardly extending, laterally spaced arms on said rear casing, said arms of the front casing being engaged between the arms of the rear casing and bearing at their rear ends on said rear intermediate follower, and said arms of the rear casing being engaged between the arms of the front casing and bearing at their front ends on said front intermediate follower; front and rear cushioning elements within said casings cooperating with said front and rear intermediate followers; and securing elements connected to said casings respectively for holding the mechanism assembled, each securing element being connected at one end to one of the arms of one of said casings and at the other end to the other casing at a point between the arms thereof, said securing elements extending through said guide openings of intermediate followers.

5. In a shock absorbing mechanism, the combination with front and rear casings; of front and rear intermediate followers between said casings, each follower having guide openings extending therethrough; a cushioning element in each casing cooperating with the corresponding intermediate follower; rearwardly extending, laterally spaced arms on said front casing; forwardly extending, laterally spaced arms on said rear casing, said arms of each casing being engaged between the arms of the other casing; a laterally outwardly projecting lug on the outer end portion of each arm, each of said lugs having a guide opening therethrough; a pair of laterally outwardly projecting lugs on each casing at the inner end portion thereof, each of said llugs having a guide opening therethrough, said last named lugs of each casing being respectively in alignment with the lugs of the arms of the other casing; and a plurality of securing elements for holding the mechanism assembled, one for each arm of each casing, each of said elements having shouldered engagement at opposite ends with the lug of the corresponding arm of one of said casings and the aligned lug of the other casing, said securing elements extending through the openings of said lugs and intermediate followers.

VERNON S. DANIELSON.

REFERENCES CITED

The following references are of record in the file of this patent:

UNITED STATES PATENTS

Number	Name	Date
1,598,892	Stuebing	Sept. 7, 1926
1,620,642	Geiger	Mar. 15, 1927
1,876,019	Priebe	Sept. 6, 1932
1,988,427	Barrows	Jan. 15, 1935
2,187,156	Johnson	Jan. 16, 1940