No. 769,020. PATENTED AUG. 30, 1904.

J. V. W. REYNDERS & W. T. SEARS.

SPACING TABLE FOR PUNCHING MACHINES.

APPLICATION FILED OCT. 3, 1903.

NO MODEL. 3 SHEETS—SHEET 1.

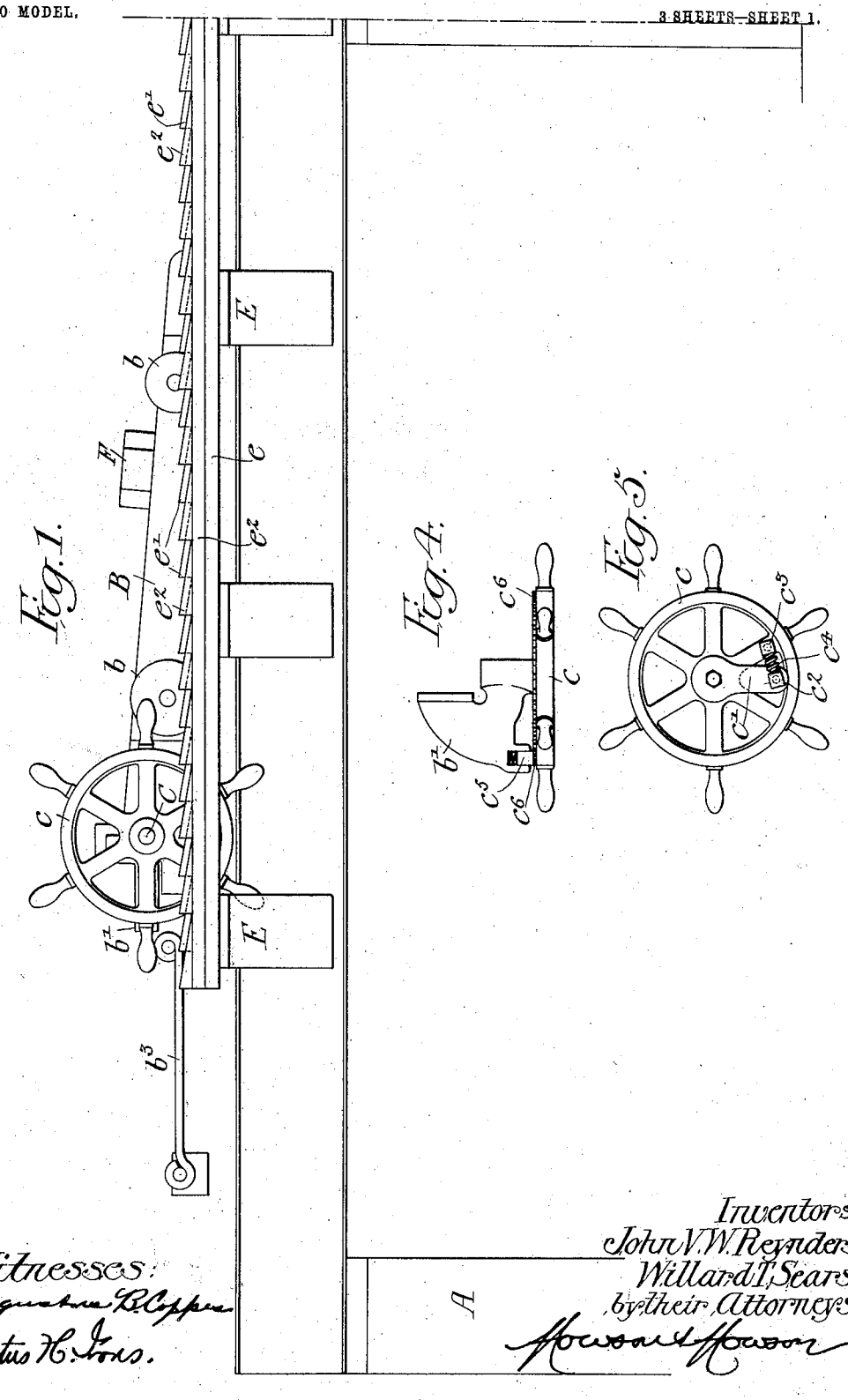

Witnesses:
Augustus B. Copper
Titus H. Sons.

Inventors
John V. W. Reynders,
Willard T. Sears,
by their Attorneys.
Howson & Howson

No. 769,020. PATENTED AUG. 30, 1904.

J. V. W. REYNDERS & W. T. SEARS.

SPACING TABLE FOR PUNCHING MACHINES.

APPLICATION FILED OCT. 3, 1903.

NO MODEL. 3 SHEETS—SHEET 2.

Fig. 2.

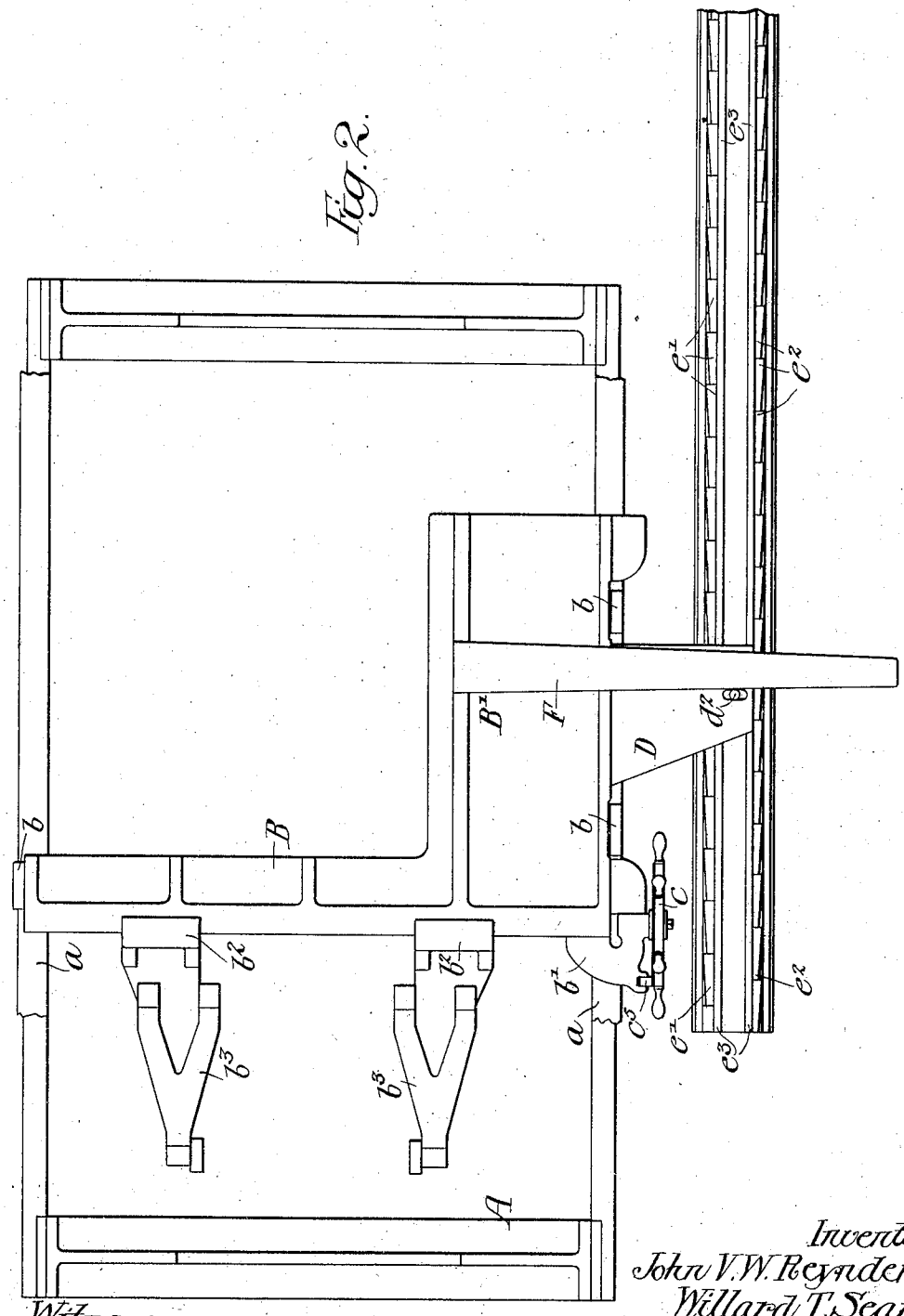

Witnesses:-
Augustus B. Copper
Titus H. Towns.

Inventors
John V. W. Reynders,
Willard T. Sears.
by their Attorneys,
Howson & Howson

No. 769,020. PATENTED AUG. 30, 1904.

J. V. W. REYNDERS & W. T. SEARS.

SPACING TABLE FOR PUNCHING MACHINES.

APPLICATION FILED OCT. 3, 1903.

NO MODEL. 3 SHEETS—SHEET 3.

Fig. 3.

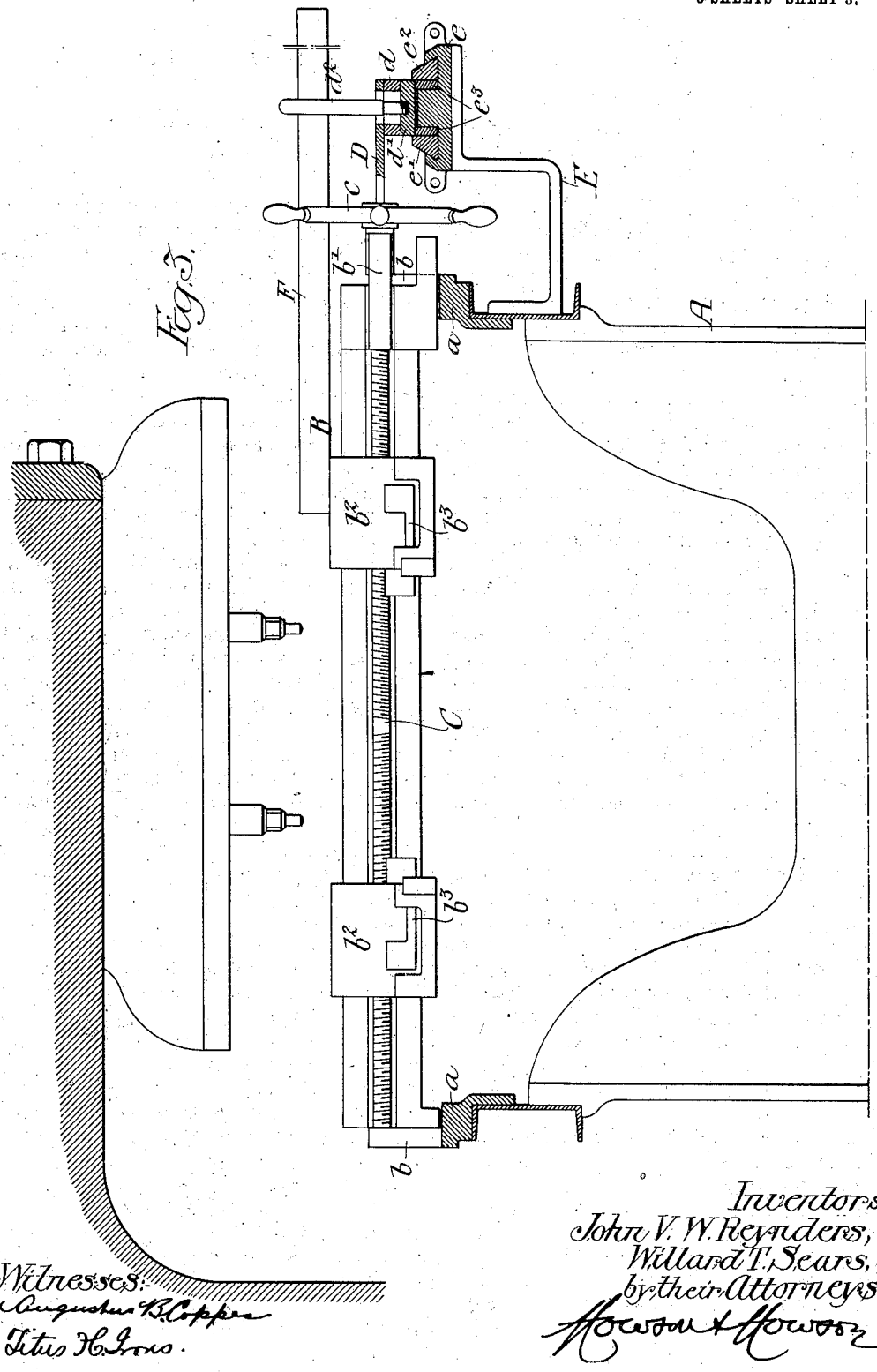

Witnesses:
Augustus B. Copper
Titus H. Gross.

Inventors
John V. W. Reynders,
Willard T. Sears,
by their Attorneys,
Howson & Howson

No. 769,020. Patented August 30, 1904.

UNITED STATES PATENT OFFICE.

JOHN V. W. REYNDERS AND WILLARD T. SEARS, OF HARRISBURG, PENNSYLVANIA.

SPACING-TABLE FOR PUNCHING-MACHINES.

SPECIFICATION forming part of Letters Patent No. 769,020, dated August 30, 1904.

Application filed October 3, 1903. Serial No. 175,663. (No model.)

To all whom it may concern:

Be it known that we, JOHN V. W. REYNDERS and WILLARD T. SEARS, citizens of the United States, and residents of the city of Harrisburg, in the State of Pennsylvania, have invented certain Improvements in Spacing-Tables for Punching-Machines, of which the following is a specification.

Our invention relates to certain improvements in spacing-tables for punches and other machines which are primarily designed for forming holes in a piece of material at predetermined distances from each other, the object of the invention being to so improve the detail construction of a device of the character above noted that is shall be possible to perform a given amount of work in less time than has hitherto been possible.

A further object of the invention is to provide a construction by which the spacing-table may be adjusted so that it may be conveniently moved through definite distances with greater ease and accuracy than has hitherto been possible, such construction being of such a nature as to permit the use of two or more sets of stops, which may be used either together or separately.

It is further desired to so construct the spacing-table that a slight movement of the work operated upon in the line of motion of the punching-tool is permissible without appreciable movement of or strain to the carriage itself. We also wish to provide a spacing-table with means for quickly and easily clamping work, which means shall at the same time be of such a nature as to hold said work so that it will not be possible for it to become loosened by jarring or by reason of the clamps cutting into it.

These objects we attain as hereinafter set forth, reference being had to the accompanying drawings, in which—

Figure 1 is a side elevation of our improved spacing-table. Fig. 2 is a plan view of same. Fig. 3 is an end elevation of the spacing-table, partly in section, and showing a portion of the head of a punching-machine; and Figs. 4 and 5 are respectively a plan and side elevation illustrating the detail construction of the operating-wheel for the clamping-jaws.

In the above drawings, A illustrates the framework of the support for the spacing table or carriage, which framework is provided with portions a, forming tracks or guides for wheels b, with which the spacing table or carriage B is provided. In the present instance this carriage is substantially L-shaped in form and has extended within and parallel to one of its arms a screw C, having upon it right and left hand threads, as shown in Fig. 3, one end of said screw being provided with an operating-wheel c, which is free to revolve thereon. As shown in Fig. 5, an arm c' is fixed to the screw-shaft and has upon it a lug c^2, between which and a similar lug c^3, projecting from the wheel c, a spring c^4 is confined. Upon the face of the wheel c, adjacent to the carriage B, is a series of ratchet-teeth (indicated at c^6 in the drawings) with which a pawl c^5 engages, so as to hold the wheel in a definite position, said pawl being carried upon a bracket b', fastened to the carriage. There are two nuts b^2 operatively carried upon the screw C, and these have hinged to them clamping-arms b^3, so designed and arranged as to engage and hold between them a piece of material to be operated upon, at the same time being free to permit limited vertical motion of such piece.

Projecting from that portion B′ of the carriage B which extends in the direction of its line of motion is a piece D in the form of a plate. This carries at its outer end a slotted block d, by which is supported a dog d', this latter being so held as to be movable to one side or the other for a purpose hereinafter explained. A projecting piece or handle d^2 is fastened to the dog d' and extends upwardly through suitable slots in the block d and the plate D.

A series of brackets E serve to support a trough e parallel to the line of motion of the carriage, in which may be removably placed one or more series of stops or spacing-blocks e' and e^2, said trough being formed in the present instance with two undercut slots for

the accommodation of these blocks. There are in the slots in addition to said blocks longitudinally-extending strips e^3, and the width of the dog d' is such that when the handle d^2 is substantially at the middle portion of the slot in the block d said dog rests upon the strip e^3 without engaging either of the series of spacing-blocks e' or e^2. Motion of the handle d^2 to either side of this position will, however, bring the dog d' into contact with one or the other series of said stops or blocks.

A bar F is so fastened to the carriage B that it will project outwardly beyond the trough and its associated parts, and this serves as a means whereby an operator may move the carriage upon its support.

In using our improved spacing-table if it be desired to move the carriage three inches at a time, for example, the trough e may have one of its undercut longitudinally-extending slots filled with blocks, as e', each three inches in length, it being noted, as shown in Fig. 1, that these blocks have their upwardly-projecting edge portions beveled, so that the whole series is somewhat similar in appearance to a rack having beveled teeth.

Owing to the fact that the nuts b^2 of the clamping-jaws respectively engage left and right hand screws, the revolution of the screw-shaft results in said jaws being either both moved toward or both from each other. If now a piece of material to be operated upon be placed between the said jaws, revolution of the wheel c will shortly bring the lug c^3 so that through the medium of the spring c^4 it will press upon lug c^2 of the arm c', and hence cause revolution of the screw-shaft C. When such material is finally grasped by the jaws b^3, it is still possible to turn the wheel c for a slight distance, so as to compress the spring c^4, and thereby continually keep the screw-shaft C in a state of torsion, which tends to still further close said jaws. Should jarring or cutting of the jaws into the material of the work tend to loosen their hold thereon, said clamps being under strain would automatically tighten and continue to firmly hold the material.

After a single hole has been punched and the blocks e' once set within the trough the handle d^2 is brought to its mid-position in the slot of the plate D and the carriage moved forward on its guides by power applied in any desired manner, the said handle being subsequently moved, so that the dog d' will come in contact with the upwardly-projecting face of the block or stop immediately adjoining the one with which it first contacted, after which the punching-machine is again operated.

If, as shown in Fig. 2, it be desired to employ the second set of blocks e^2, these may be placed in their slot of the trough so as to have their faces in position to engage the dog d' midway between the faces of the blocks e', and in operation the handle d^2 is so moved as to cause the dog d' to engage the blocks e' and e^2 alternately, the carriage being moved forward each time by a distance equal to one-half of the length of the blocks.

When the punch is stripping or moving out of a piece of work, lifting the latter a limited distance and then dropping it, the hinging of the clamping-jaws or pivots at right angles to the line of movement of the punch permits a slight upward motion of the work without appreciable movement of the carriage and without causing strain thereto.

It will be seen that the length of the space between operations on a piece of work is determined by the length of the blocks or stops e' and e^2, which may, as in the form illustrated, be provided with projecting portions, or, if desired, may have slots or recesses against or into which the dog supported by the carriage may enter.

It will be understood, for example, that in preparing a spacing-table for use much less time would be occupied in placing a three-inch block in position than would be necessary to measure and adjust a movable stop as in the devices hitherto known, and in addition to this the probability of mistakes in measurement is rendered unlikely, since stops of predetermined size for the work to be done are employed, which require no other adjustment than the placing in position within their trough.

We claim as our invention—

1. The combination of a supporting structure, a carriage movable thereon and having means for holding material to be operated upon, a trough, a series of blocks therein of lengths bearing a definite relation to the spaces to be moved over by the carriage, an arm on the carriage, with a movable dog on the arm, said dog having a hand operating-bar and being free to be moved in a substantially longitudinal line into engagement with said blocks, substantially as described.

2. The combination of a supporting structure, a carriage movable thereon, a plurality of series of removable stops having means whereby they are supported adjacent to each other, said stops being of lengths bearing a definite relation to the distances through which said carriage is to be moved and means on the carriage for engaging the stops, substantially as described.

3. The combination of a supporting structure, a carriage movable thereon, a plurality of series of removable stops having means whereby they are supported adjacent to each other, said stops being of lengths bearing a definite relation to the distances through which said carriage is to be moved and a single device on the carriage for engaging all of the series of stops, substantially as described.

4. The combination of a supporting structure, a carriage movable thereon, a plurality of series of removable stops of lengths equal

to the distances through which the carriage is to be moved, means extending parallel to the line of motion of the carriage for supporting the series of said stops all on the same side of said carriage, and a projection from the carriage having means for engaging the stops at will, substantially as described.

5. The combination of a supporting structure, a carriage movable thereon, a trough supported parallel to the line of motion of the carriage, a series of blocks therein having face portions, said carriage having a dog free to be moved in a horizontal line substantially at right angles to the line of motion of the carriage into and out of engagement with said face portions of the blocks, substantially as described.

6. The combination of a supporting structure, a carriage movable thereon, a plurality of series of stops, means for supporting said stops in lines substantially parallel to the line of motion of the carriage, and a movable piece supported by the carriage and free to engage the stops of more than one series of the same, substantially as described.

7. The combination of a supporting structure, a carriage movable thereon, a plurality of series of stops, means for supporting said stops in lines substantially parallel to the line of motion of the carriage, and a piece movable in a line between said series of stops, and free to be moved at right angles to said line to engage either of the series of stops, substantially as described.

8. The combination with a machine having a vertically-moving tool, of a supporting structure, a carriage movable thereon, a pair of jaws on the carriage, means for moving the jaws toward and from each other, said jaws having means connecting them to the carriage whereby they are free to move in the direction of the line of motion of said tool, with means for governing the distances moved through by the carriage, substantially as described.

9. The combination with a machine having a vertically-movable tool, of a supporting structure, a carriage movable thereon, a pair of jaws on the carriage and means for moving the jaws toward and from one another, said jaws being hinged to said carriage and free to be moved to a limited extent in substantially the line of action of said tool, with means for permitting the carriage to be moved forward through predetermined distances, substantially as described.

10. The combination of a supporting structure, a carriage movable thereon, a shaft on said carriage provided with right and left hand screw-threads, a pair of clamping-jaws respectively engaging said threads and means for turning said shaft to simultaneously move the jaws toward or from each other, with means for limiting the motion of the carriage, so that it may be moved through predetermined distances, substantially as described.

11. The combination of a supporting structure, a carriage movable thereon, having means whereby its motion is limited to predetermined distances, a pair of clamping-jaws on the carriage, means for simultaneously moving said jaws toward or from each other, said means including a shaft, means for turning the same, and a yielding coupling between said turning means and the jaws, substantially as described.

12. The combination of a supporting structure, a carriage movable thereon, a pair of nuts carried by the carriage, means for simultaneously moving the nuts toward or from each other and a jaw hinged to each of said nuts, with means for limiting the motion of the carriage to predetermined distances, substantially as described.

13. The combination of a supporting structure, a carriage movable thereon and provided with a device whereby its motion is limited to predetermined distances, a pair of clamping-jaws on the carriage, means for simultaneously moving said jaws toward and from each other, said means including a shaft, means for turning the same, and a yielding coupling between said turning means and the jaws, with means for locking said turning means in a definite position and maintaining said coupling means under strain, substantially as described.

14. The combination of a supporting structure, a carriage movable thereon and having means whereby its motion may be limited to predetermined distances, a pair of clamping-jaws on the carriage, means including a shaft for moving said jaws toward and from each other, a wheel loose on the shaft, means for locking the wheel in a definite position, and a coupling between the wheel and the shaft including a spring whereby said shaft may be maintained in a state of torsion, substantially as described.

In testimony whereof we have signed our names to this specification in the presence of two subscribing witnesses.

JOHN V. W. REYNDERS.
WILLARD T. SEARS.

Witnesses:
WM. C. ARMOR,
MARY E. HAUER.