United States Patent

[11] 3,627,161

[72] Inventor **Marvin L. Wergeland**
37 Saviers Road, Oxnard, Calif. 93030

[21] Appl. No. **880,010**
[22] Filed **Nov. 26, 1969**
[45] Patented **Dec. 14, 1971**

[54] **BABY BOTTLE AND MUSIC BOX UNIT**
5 Claims, 4 Drawing Figs.

[52] **U.S. Cl.** ..... **215/11 C,** 215/11 R, 46/175
[51] **Int. Cl.** **A61j 9/00**
[50] **Field of Search** ..... 215/11; 222/179.5, 182; 220/42 A, 42 B, 97 F; 401/124, 98, 202, 213, 195, 196; 46/11, 175

[56] **References Cited**

UNITED STATES PATENTS

2,929,290	3/1960	Smith	215/11.3 UX

FOREIGN PATENTS

288,756	6/1953	Switzerland	84/95

Primary Examiner—Samuel F. Coleman
Assistant Examiner—James M. Slattery
Attorney—Pastoriza and Kelly

ABSTRACT: In order to soothe and calm a baby and encourage him to eagerly drink from a baby bottle, a cap retaining a music box is shaped to be detachably coupled to the bottom of the baby bottle. A closed end of the cap has a positioning hole through which a windup stem of the music box extends so a person can easily crank or wind up the music box at a desired time.

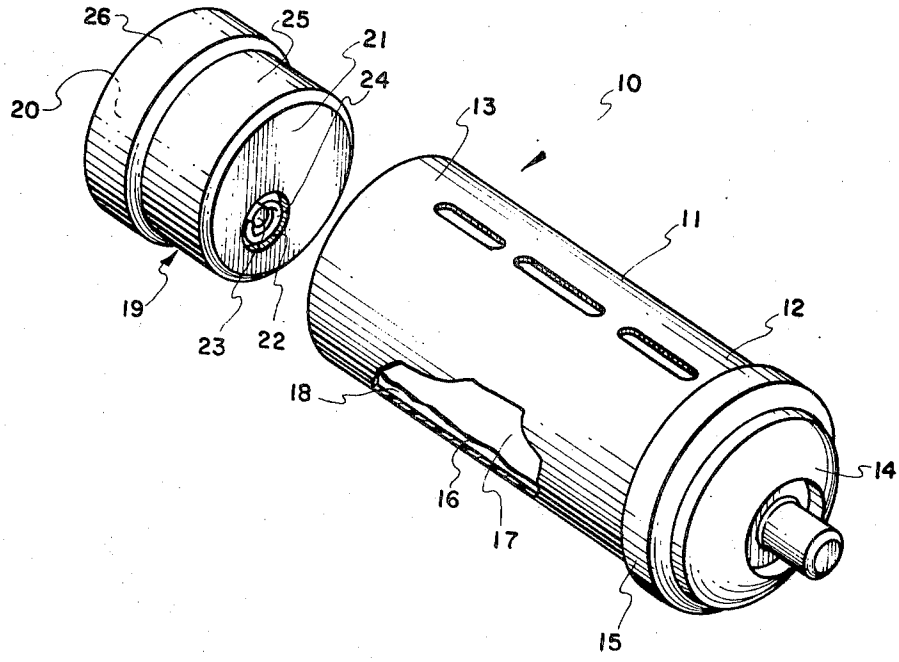

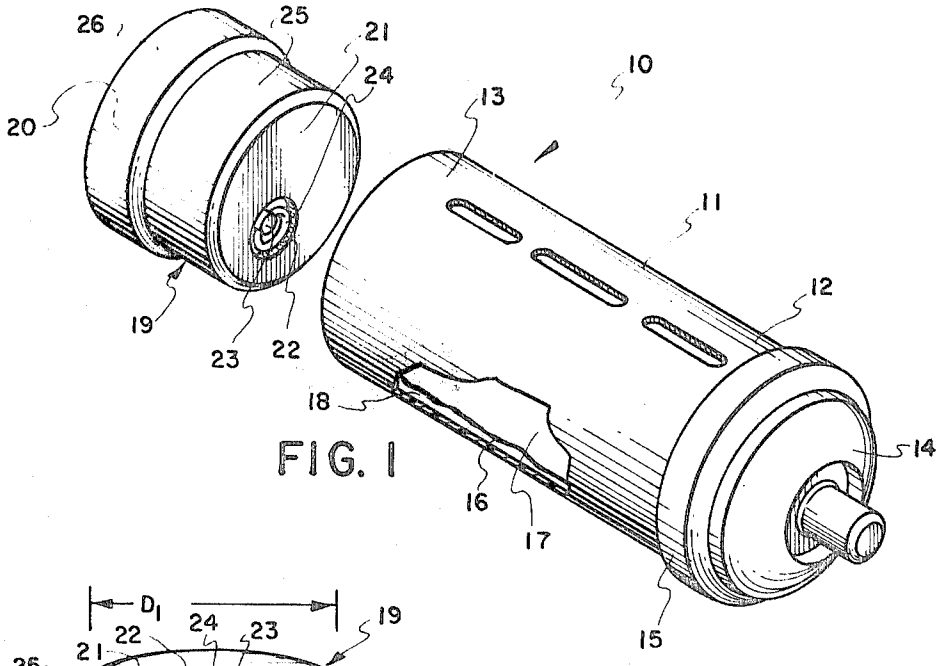

FIG. 1

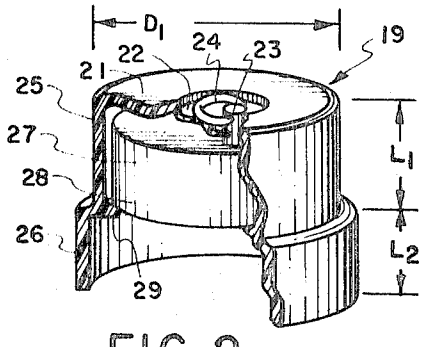

FIG. 2

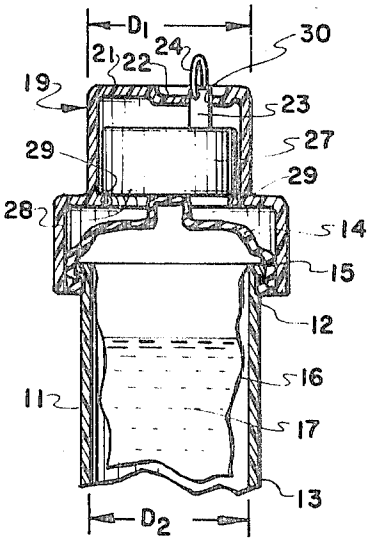

FIG. 3

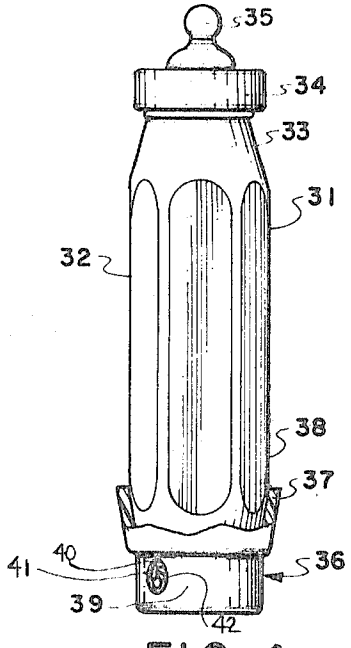

FIG. 4

INVENTOR:
MARVIN L. WERGELAND

BY
Pastoriza & Kelly
ATTORNEYS

BABY BOTTLE AND MUSIC BOX UNIT

BACKGROUND OF THE INVENTION

This invention relates to baby bottles and more specifically to a baby bottle in combination with a music box that may be operated to induce a baby to drink milk.

From time to time some infants completely resist taking or drinking milk or formula from conventional baby bottles and this reluctance is both harmful to their health and very annoying and sometimes alarming to the parents or supervisors. On other occasions the milk is accepted only grudgingly and intermittently over a long span of time and this is tedious for the parent.

In order to influence the infant to eagerly or at least willingly accept the baby bottle various techniques and practices have been attempted such as singing or playing a music box, the sounds of which are thought to relax and soothe the infant and make him much less hostile to the baby bottle.

Music boxes are ordinarily coupled to and generally concealed within stuffed animals, dolls, toys or other articles that are separated from the baby bottle. In addition to being expensive these articles often tend to distract the infant's attention from the baby bottle and he may reach for the article instead of clutching or being satisfied by the baby bottle. Thus the advantages of ordinary music boxes positioned totally apart from the baby bottle are unpredictable and may well interfere with the infant's drinking behavior rather than assisting him.

As shall be fully described this invention is aimed at coupling a music box and baby bottle in a manner so that the advantages of the music box can be satisfactorily employed to soothe the baby and urge him to drink from the baby bottle.

BRIEF SUMMARY OF THE INVENTION

Briefly stated this invention comprehends a simple, inexpensive and effective structure for encouraging an infant to drink from a baby bottle. In the broadest aspects of this invention a music box is retained within a cap that can be detachably coupled to a baby bottle. The cap has a wall portion formed with a positioning hole through which the windup stem of the music box extends.

In accordance with one embodiment the baby bottle includes a container with an open top end for holding a conventional nipple and cover, and, a closed bottom end shaped for being inserted into and making press-fitting engagement with the cap.

In accordance with a second embodiment of this invention the music box windup stem projects through a positioning hole formed through a closed end of the cap. A crank is pivotally secured to the tip of the windup stem and a recess is formed in the cap closed end for retaining the crank when it lies in its retracted position.

In order to hold the music box in a confined position adjacent the cap closed end, a plurality of locking tabs extend inwardly from the cap interior wall and are arranged to make snap-fitting engagement with the music box. The cap is formed within enlarged lower cylindrical section that is sized to be snugly seated upon the baby bottle top when, for example, the parent or babysitter wishes to take advantage of the music box during periods when the baby is not required to drink milk.

BRIEF DESCRIPTION OF THE DRAWINGS

The numerous benefits and unique aspects of the present invention will be fully understood when the following detailed description is studied in conjunction with the drawings in which:

FIG. 1 is a perspective exploded view of one embodiment constructed in accordance with this invention, showing a cap retaining a music box oriented for insertion into the base of a baby bottle;

FIG. 2 is a perspective view partly broken away, showing the music box retained in a hollow section of the cap;

FIG. 3 is a vertical sectional view, showing the cap positioned on the baby bottle top with the crank of the music box windup stem arranged in a raised position for use in winding up the music box; and,

FIG. 4 is a side view partially broken away of a second embodiment constructed in accordance with this invention, showing the music box windup stem extending through a sidewall portion of the cap. DETAILED DESCRIPTION DESCRIPTION OF THE PREFERRED EMBODIMENTS

Referring now to FIG. 1 a baby bottle and music box unit **10** incorporates a conventional baby bottle **11** including an elongated plastic tubular casing **12** having an open top end **12** and an open bottom end **13**. A nipple **14** has a resilient depending skirt **15** which when stretched outwardly by a person and slipped over end **12** will accomplish a virtually leakproof seal with baby bottle **11**. A disposable and collapsible flexible sack or bag **16** is firmly held within baby bottle **11** in the customary manner. Bag **16** contains liquid such as milk **17** intended to be consumed by the baby. Ordinarily bag **16** will lie loosely adjacent the casing sidewall and be slightly spaced therefrom at its lower end by an annular gap **18**.

A cap **19** is structured and FIGS. for being detachably coupled within bottom end **13** of baby bottle **11**. Cap **19**, constructed from some suitable durable plastic material, has an open end **20** and a closed end **21** a portion of which is formed with a depression or recess **22**. Extending outwardly from the interior portion of cap **19** and partially but not entirely through recess **22** is a windup key or stem **23** associated with a music box shown in FIGS. 2 and 3. A ring-shaped crank **24** is pivotally secured to the exposed tip of windup stem **23** so that when urged manually from a retracted position as shown in FIG. 1 to an extended position shown in FIG. 3 a person may windup the music box. The cap **19** has an upper cylindrical section **25** sized for making wedge or press-fitting engagement within casing end **13** and a lower cylindrical section **26** that may optionally be clamped over the nipple **14** and top casing end **12** as shall be subsequently described.

FIG. 2 shows the crank **24** lying in its retracted position substantially flat against the floor wall portion of recess **22**. Windup stem **23** is coupled in the usual manner to a music box **27** that is of simple, compact construction. When crank **24** is manipulated to rotate windup stem **23** then a conventional spring mechanism within music box **27** is caused to store spring energy. When crank **24** is thereafter released the stored spring energy operates to drive a drum formed on its external periphery with projections past a series of musical tines joined together in a bar. As the projections are forced past the tines according to a predetermined musical pattern then a musical tune such as a nursery rhyme tune is created for the amusement and entertainment of the infant.

The music box **27** is confined within the upper cylindrical section **25** and its lower end **28**, in the position shown in FIG. 2, rests upon a plurality of locking tabs **29**. A plurality of locking tabs **29** extend inwardly from the interior wall of cap **19** and are sufficiently spaced and arranged to make snap-fitting engagement with music box **27**. There is sufficient longitudinal clearance between locking tabs **29** and cap closed end **21** so that when crank **24** is removed the music box **27** and stem **23** can be thrust past locking tabs **29** into their desired positions. Thereafter crank **24** may be easily pivotally attached to stem **23**. Music box **27** may be easily withdrawn from its chamber cylindrical section **25** for maintenance, cleaning or replacement purposes. The diameter of upper cap cylindrical section **25** is indicated by D_1 and the longitudinal lengths of the cap upper cylindrical section **25** and lower cylindrical section **26** are indicated by L_1 and L_2 respectively. In order to furnish adequate space for confining music box **27** length L_1 would ordinarily exceed length L_2.

Referring to FIG. 3 cap-closed end **21** is formed therethrough with a positioning hole **30** surrounded by recess **22**. Positioning hole **30** is aligned eccentrically within recess **22** so that crank **24**, as best shown in FIG. 2 can lie neatly within a shallow space and below the plane of the cap-closed

end outer surface. The baby would then be unable to catch his finger in the loop of crank **24**. The diameter D_1 of cap upper cylindrical section **25** is substantially equivalent with the diameter D_2 of the interior surface of tubular casing **11** so that cap **19** can be inserted into and snap fitted against the tubular casing bottom end **13**. Two or more locking tabs **29** may be formed on the interior wall of cap **19** in order to constitute holding means for retaining the music box **27** in the desired confined position. The upper margin of flexible bag **16** is tightly pressed between cap top end **12** and the depending skirt **15** of nipple **14**. By the arrangement of FIG. **3** the music box **27** is capable of entertaining the infant before or after the infant is scheduled to drink milk **17**. Optionally, the music box **27** may be used at any randomly selected time to entertain the infant.

FIG. **4** illustrates a second embodiment of this invention wherein a different type of conventional baby bottle **31** has a container **32** with an open top end **33**. End **33** is formed with the customary threaded neck for receiving a cover **34** shaped to hold a nipple **35**.

A cap **36**, analogous to the cap **19** of the FIG. **1** embodiment, has an open end **37** sized for being slipped over the closed bottom end **38** of container **32** in order to make press-fitting engagement therewith. A sidewall portion **39** of cap **36** is formed with a recess **40** and positioning hole (not shown) through which the windup stem **41** of a music box extends. A ring-shaped crank element **42** may be used by a parent or babysitter in order to set the music box for playing musical tunes.

OPERATION

Keeping the above two constructions in mind it can be understood how the existing problems of encouraging an infant to drink milk are substantially overcome by the present invention.

Initially the baby bottle and music box unit **10** is assembled by snap fitting the music box **27** into its desired position, as shown in FIG. **2**, and pivotally attaching crank **24** to windup stem **23**.

When feeding time arrives for the infant the parent or babysitter first pours milk **17** or other liquid in the baby bottle **11** and attaches the nipple **14** in the customary manner. Thereafter crank **24** is flipped from its retracted position of FIG. **2** to its extended position of FIG. **3** and twisted through a sufficient number of revolutions until windup stem **23** has adequately set music box **27** for imparting music.

Cap **19** is then oriented as shown in FIG. **1** and pushed forwardly until most or all of cylindrical section **25** is urged into casing bottom end **13** so that casing **11** and cap **19** can be frictionally held together as a unit **10**. When the spring energy within music box **27** is expended then cap **19** can be easily decoupled and pulled away from baby bottle **11**, wound up again, and reinserted to resume the entertainment and amusement for the infant.

From the foregoing it will be evident that the present invention has provided a music box and baby bottle unit in which all of the various advantages are fully realized.

We claim:

1. A baby bottle and music box unit comprising:

a. a baby bottle having a tubular casing with an open top end for receiving thereon a nipple having a depending skirt that fits over the open top end, and, an open bottom end;

b. a cap with an open end and a closed end formed with a positioning hole, the cap including an upper cylindrical section sized to be press fitted into the casing bottom end and a lower cylindrical section of larger diameter than that of the upper cylindrical section and substantially equal to the nipple skirt diameter so that the cap may be alternatively fitted on and over the casing top end;

c. a recess formed in the cap-closed end generally surrounding the positioning hole; and,

d. a music box retained in the cap and arranged adjacent the cap-closed end, the music box including a windup stem positioned through the positioning hole and a crank pivotally secured to the windup stem and sized to lie within the recess when in its retracted position.

2. The structure according to claim **1**, including:

holding means coupled to an interior wall portion of the cap for retaining the music box in a confined position.

3. The structure according to claim **2**, wherein the holding means includes:

a plurality of locking tabs extending inwardly from the cap interior wall and being arranged to make snap-fitting engagement with the music box.

4. The structure according to claim **3**, wherein;

both the cap and music box are generally of circular cross-sectional shape.

5. The structure according to claim **1**, wherein;

the music box is entirely included within the cap upper cylindrical section.

* * * * *