(12) INTERNATIONAL APPLICATION PUBLISHED UNDER THE PATENT COOPERATION TREATY (PCT)

(19) World Intellectual Property Organization
International Bureau

(43) International Publication Date
23 January 2014 (23.01.2014)

WIPO | PCT

(10) International Publication Number
WO 2014/015060 A2

(51) International Patent Classification:
*B29C 35/12* (2006.01) *B29C 44/54* (2006.01)
*B29C 44/34* (2006.01) *B29C 70/74* (2006.01)
*B29C 33/18* (2006.01) *B65D 81/03* (2006.01)

(21) International Application Number:
PCT/US2013/050928

(22) International Filing Date:
17 July 2013 (17.07.2013)

(25) Filing Language: English

(26) Publication Language: English

(30) Priority Data:
61/674,110 20 July 2012 (20.07.2012) US

(71) Applicant: **LBP MANUFACTURING, INC.** [US/US]; 1325 S. Cicero Avenue, Cicero, IL 60804 (US).

(72) Inventors: **FU, Thomas, Z.**; 2607 Saltmeadow Rd., Naperville, IL 60564 (US). **COOK, Matthew, R.**; 3516 Madison, Oak Brook, IL 60523 (US). **ELLIS, Earle, R.**; 11440 Enterprise Drive, Westchester, IL 60154 (US).

(74) Agents: **GREENE, Nathan, O.** et al.; Brinks Hofer Gilson & Lione, P.O. Box 10087, Chicago, IL 60610 (US).

(81) Designated States *(unless otherwise indicated, for every kind of national protection available)*: AE, AG, AL, AM, AO, AT, AU, AZ, BA, BB, BG, BH, BN, BR, BW, BY, BZ, CA, CH, CL, CN, CO, CR, CU, CZ, DE, DK, DM, DO, DZ, EC, EE, EG, ES, FI, GB, GD, GE, GH, GM, GT, HN, HR, HU, ID, IL, IN, IS, JP, KE, KG, KN, KP, KR, KZ, LA, LC, LK, LR, LS, LT, LU, LY, MA, MD, ME, MG, MK, MN, MW, MX, MY, MZ, NA, NG, NI, NO, NZ, OM, PA, PE, PG, PH, PL, PT, QA, RO, RS, RU, RW, SC, SD, SE, SG, SK, SL, SM, ST, SV, SY, TH, TJ, TM, TN, TR, TT, TZ, UA, UG, US, UZ, VC, VN, ZA, ZM, ZW.

(84) Designated States *(unless otherwise indicated, for every kind of regional protection available)*: ARIPO (BW, GH, GM, KE, LR, LS, MW, MZ, NA, RW, SD, SL, SZ, TZ, UG, ZM, ZW), Eurasian (AM, AZ, BY, KG, KZ, RU, TJ, TM), European (AL, AT, BE, BG, CH, CY, CZ, DE, DK, EE, ES, FI, FR, GB, GR, HR, HU, IE, IS, IT, LT, LU, LV, MC, MK, MT, NL, NO, PL, PT, RO, RS, SE, SI, SK, SM, TR), OAPI (BF, BJ, CF, CG, CI, CM, GA, GN, GQ, GW, KM, ML, MR, NE, SN, TD, TG).

**Published**:

— *without international search report and to be republished upon receipt of that report (Rule 48.2(g))*

(54) **Title**: MICROWAVE HEATING OF HEAT-EXPANDABLE MATERIALS FOR MAKING PACKAGING SUBSTRATES AND PRODUCTS

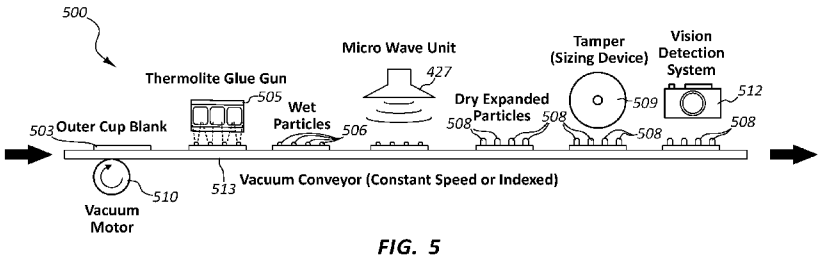


*FIG. 5*

(57) **Abstract**: Packaging containers (e.g., cups) or protective wraps may be made with two layers of sheet material and an expanded thermal insulation between the layers. The thermal insulation may be made from microencapsulated, heat-expandable particles that are expanded with a microwave heater at some point during processing substrate, building, conveying or packaging the containers. The particles may be applied to blanks formed from die cutting, expanded by heating, and then tampered. The blanks may be outer wraps to a double wall cup, formed by placing and adhering an inner cup to the outer wrap. Alternatively, an adhesive containing the particles are applied to inner cups, which may be adhered to outer wraps to complete formation of the double wall cups. The cups may then be heated with a microwave heater at a subsequent workstation as the cups are conveyed, stacked, placed in bags, the bags in cartons and the cartons stacked and palletized.

WO 2014/015060 A2

# MICROWAVE HEATING OF HEAT-EXPANDABLE MATERIALS FOR MAKING PACKAGING SUBSTRATES AND PRODUCTS

## BACKGROUND

**[0001]** Consumers frequently purchase ready-made products, such as food and beverages and other products, in containers made from packaging substrates. Thermally-insulated containers may be designed for hot or cold liquids or foods, such as hot coffee, iced-tea, hamburger, sandwiches, or pizza, so on. It is desirable that these containers can maintain the temperature of the liquid or food contents as long as possible by reducing heat or cold transfer from the contents through the container.

**[0002]** To help insulate the hand of the consumer from the heat of a hot beverage, or keep the desirable temperature of the contents of a food or beverage container longer, heat-expandable adhesives and coatings have been developed by the inventors for use with packaging substrates, for example, with multilayer micro-fluted board, paper or paperboard. Such expandable adhesives and coatings can expand upon being heated over a range of certain temperatures.

## BRIEF DESCRIPTION OF THE DRAWINGS

**[0003]** Figure 1 is a perspective view of a cup assembled with an outer wall.

**[0004]** Figure 2 is a side cutaway view of a double wall cup.

**[0005]** Figure 3 is a cross-section view of a sleeve with a cup.

**[0006]** Figure 4 is a side view of an exemplary machine system for making packaging materials and substrate for containers.

**[0007]** Figure 5 is a side view of a vacuum conveyor through which blanks may be processed to which is adhered heat-expandable material.

**[0008]** Figure 6 is a modified mandrel adapted with a raised strip including vacuum holes.

**[0009]** Figure 7 is an example of an outer wall blank (or wrap) having a patterned coating of heat-expandable material having a gap into which the raised strip of the mandrel of Figure 6 may be located.

**[0010]** Figure 8 is a perspective view of a vacuum tube conveyor using the mandrel of Figure 6 to transport an outer wrap that includes heat-expanded particles on an inner side.

**[0011]** Figure 9 is a perspective view of a cup-building machine, showing application of heat-expandable material to an outside of an inner cup.

**[0012]** Figure 10 is a perspective view of the cup-building machine of Figure 9, showing insertion of the covered inner cup into an out cup blank (or wrap), to build a double wall cup.

**[0013]** Figure 11 is a flow diagram of multiple workstations or points of a manufacturing process for manufacturing packaging products, where microwave heat may be applied at or between these points to expand heat-expandable adhesives or coatings incorporated within or on substrate layers of packaging substrates and/or product(s).

**[0014]** Figure 12 is a perspective schematic view of an exemplary industrial microwave heater applicator as positioned over conveyor belts.

**[0015]** Figure 13 is a top, plan schematic view of the microwave heater applicator of Figure12.

**[0016]** Figure 14 is a side, plan schematic view of the industrial microwave heater applicator of Figure12.

**[0017]** Figure 15 is a front, cross-section schematic view of the industrial microwave heater applicator of Figure 12.

**[0018]** Figure 16 is a flow chart of an exemplary method for manufacturing a multilayer sheet material in a process that includes microwave heating of the multilayer sheet material to expedite expansion of a heat-expandable adhesive or coating.

DETAILED DESCRIPTION

**[0019]** A method is disclosed for utilizing microwave energy to heat, activate and expand heat-expandable adhesives and coatings, which can be either onto and/or within a substrate material used to subsequently be converted to a product, or placed directly onto or within a packaging product during its manufacturing processes. The substrate material can be either monolayer or multilayer in the form of rolls, sheet or blanks made of materials such as paper, paperboard, coated paper, fluted board

material, plastic film, woven material, textile, nonwoven material, and/or metalized substrates, or any combination of these materials.

**[0020]** The multilayer sheet or roll web substrates can be bonded together by heat-expandable adhesives and coatings. The product can be a variety of packaging or non-packaging products, for example, but not limited to, double wall paper hot cups, paper bags, clamshell, hot cup insulating sleeves, take-out folding carton and boxes. The method may include heating up the packaging products made of such materials after the products are formed, or after the products are packed in a shipping container, or after the containers are loaded onto a pallet. A microwave heater utilizes microwave energy to activate the heat-expandable adhesive or coating, causing the heat-expandable adhesive or coating to expand efficiently. The expansion of the adhesives or coating can help increase thermal insulation and rigidity of a laminated or coated material, which helps convert the materials to packages or containers, and improve the insulation of the fluid and solid contents of the containers. The expansion of the adhesives or coating can also help reduce packaging material by allowing the use of less material while maintaining the thermal insulation and rigidity required of a laminated or coated material.

**[0021]** The method above can be automated to activate and expand the heat-expandable adhesives and coatings on or in substrate material (or called the "pre-activation") or on or in a product after it is formed (call the "post-activation"). The heat-expandable adhesive or coating may be formulated with a composition containing heat-expandable microencapsulated particles, like microspheres or microtubes or other shapes, and other components, such as starch or other natural or synthetic binders and other additives as needed for a specific application. For example, the heat-expandable adhesive or coating may be prepared within one or a combination of: viscosity modifier, moisture modifier, defoamer, dispersants, anti-mold agents, and salts. Some examples of a microencapsulated particle include: Dualite supplied by Henkel, Expancel supplied by AkzoNobel, the Microspheres F and FN series supplied by Matsumoto, and the Microspheres supplied by Kureha.

**[0022]** The microwave heater may heat the material at any of various points of the manufacturing process after the application of the heat-expandable adhesive or coating. A multilayered sheet material may be laminated with any combination of

suitable materials aforementioned, and conveyed to final processing, such as to be printed, die cut, formed, and/or otherwise assembled into product containers.

**[0023]** Heat may be applied to the material by the microwave heater at any or a combination of these manufacturing points or stages, e.g., at or between various workstations along the manufacturing process. For example, microwave heat may be applied to the substrates while being layered and laminated, after the heat-expandable adhesives or coatings have been applied. Furthermore, microwave heat may be applied to individual product containers containing unexpanded microspheres after they have been formed, e.g., during conveyance of the products to a workstation for packing the products into a shipping container.

**[0024]** Alternatively or in addition, microwave heat may be applied through a shipping container, e.g., a regular slotted carton into which a number of products have been packed. Further, microwave heat may be applied through a loaded pallet onto which a number of shipping containers are stacked. The heat-expandable adhesives or coatings incorporated within or layered on the substrates of the products may not be expanded (or may not be fully expanded) until application of the microwave heat at these later stages of the manufacturing process before shipping.

**[0025]** A package container may be constructed of and/or insulated with an insulating material. The insulating material may be made of multilayer laminated substrate(s) or a coated substrate containing a heat-expandable adhesive or coating. The heat-expandable adhesive or coating may be expanded either before or after formation of the package container from the multilayer substrate(s) by application of microwave heat. Other sources of heat or thermal energy such as hot air or infrared (IR) may also be applied in addition to the microwave heat.

**[0026]** The heat-expandable adhesive or coating may be applied onto the container or within a container material or between container layers, or may be applied to an outer wall of a container, or to a combination of these. The insulating material containing the heat-expandable adhesive or coating may be expanded before reaching an end user, such as when the container and/or a container sleeve are manufactured, and/or the insulating material may be expanded only at end use and only in response to, for example, some level of temperature of a hot beverage or food served within the container. The expanded insulating material may be used to

aid with insulating capabilities of the container and/or the container sleeve, and/or to add rigidity to the container and/or the container sleeve, and could help reduce the thickness of the material components of the container and/or the container sleeve.

**[0027]** The sheet material used to make the package, container, and/or container sleeve may be manufactured on a conveyor-type machine system, in an automated assembly-line process, one example of which will be discussed in more detail later. The heat-expandable adhesive or coating may be applied by many conventional application methods, such as non-contact like spray, and/or contact-like rod, roll, nozzle or slot extrusion, pad and brush coating methods or otherwise applied onto sheet material, for example, but not limited to, onto a corrugated medium before a liner is laminated onto it. The heat-expandable adhesive or coating may thus be located between two layers of some sort of sheet material before being expanded during the manufacturing process. When the insulating material is a coating, the insulating material may be applied to a monolayer (or single) sheet or to an outside surface of or within a multilayered sheet before expansion by heat. Other embodiments are likewise possible, as discussed later, such as applying microwave heat after the formation of a multilayer substrate, or after the formation of a product, or before shipment of the containers from a warehouse to expand the expandable adhesive or coating at some other point during or after the manufacturing process.

**[0028]** In some embodiments, the heat-expandable adhesives/coatings are heated during a conveyor-type machine assembly process so the expansion occurs when the containers are manufactured. With conventional machine systems, the common source of heat has been by a hot air and/or infrared (IR). Conventional heating methods, such as a hot air oven and/or an infrared heater installed in-line on a machine system alone are sometimes not effective to adequately activate heat-expandable microencapsulated particles—like microspheres or microtubes that are added to the heat-expandable adhesive(s) or coatings—at production speed, typically 150 feet per minute (fpm) to 600 fpm. This is due, in part, to the space and heat power limitations and the heating mechanism of these methods primarily based on conduction, convection, and radiation with heat transfer from outside to inside of the material being heated. With these conventional sources of heating, accordingly, technical issues are exhibited in the mode of thermal energy transfer, which leads to inefficient and constrained expansion of the heat-expandable microparticles. For

example, the outer part of the coating may be dried and solidify first, significantly constraining the expansion of the expandable microparticles.

**[0029]** It is proposed in the present disclosure to apply microwave energy from an industrial microwave heater adapted to apply microwave energy over and through the substrate material or packaging product containing the heat-expandable adhesives or coating passing through it during the process. Accordingly, the microwaves from the microwave heater can penetrate into and energize the expandable adhesive or coating inside the substrate, causing them to heat up more uniformly, volumetrically and quickly than they would from the conductive, convectional or surface radiant heat. This is due to the volumetric microwave heating of the heat-expandable adhesives/coatings in a relatively short time. For example, heat-expandable microspheres mixed into the adhesives/coatings may expand rapidly when the mixture in which the microspheres are located heats up quickly from exposure to the powerful microwave energy.

**[0030]** The heat-expandable adhesive or coating may contain expandable microencapsulated microparticles, like microspheres or microtubes from multiple different sources. Non-limiting examples include commercial products like Dualite, MicroPearl, and Expancel discussed earlier, and thermally expandable microtubes that may be used in formulating expandable materials.

**[0031]** The heat-expandable adhesives/coatings may include starch-based glues, may be synthetic or natural material-based, such as polyacrylates, polyvinyl acetates, polyvinyl alcohol, starch, polylactic acid, and other material, and may be applied to many different substrate materials, such as paper, paperboard, corrugated board, plastic films, metalized films, textile, woven or nonwoven materials and other materials from which to make laminates or coated substrates. The heat-expandable adhesives or coatings may also facilitate material reduction, reducing adverse environmental impact of packaging by reducing material while maintaining bulk and thermal insulative performance in packaging products. These laminated or coated substrates in turn can be converted into many useful food and non-food packaging products, for example, but not limited to, folding carton containers, hot and cold cups, boxes, paper clamshells, fluted sleeves, microfluted clamshells, E-fluted box, bag, and bag-in-boxes and other packaging products (referred to generally as containers). The multilayer materials with expanded material provide more

flexibility for someone to expand the choices for caliber and basis weight of different substrates than what are commonly available and supplied by existing material suppliers.

**[0032]** These heat-expandable adhesives/coatings can be applied in conventional corrugating laminator, printing press, coater, coating applicator, or other application methods, and expanded with the assistance of an industrial microwave heater to boost efficiency and speed. The heat-expandable coatings can be applied onto paper substrates in full coverage or in pattern of any practical design, and subsequently expanded by the microwave heater to create a cellular or foamed structure in the coating layer with different end-use benefits, some of which will be explained below.

**[0033]** Figure 1 illustrates a container 100, such as a cup, with an inner wall 102and an outer wall 104.A blank for the outer wall 104 may be in the form of a container sleeve or a sidewall wrap for the body of the container 100. The inner wall 102 could be formed from a laminated board with expandable insulating material on the outer surface thereof. The insulating material could also be positioned between the inner wall 102 and the outer wall 104. The outer wall 104 may not be needed when the inner wall 102 coated with the insulating material includes adequate bulk and insulation.

**[0034]** The container 100 is not limited to a cup and may be any other container, including but not limited to, a bulk coffee container, a soup tub, press-formed containers, plate, sleeve (e.g., single face corrugated, double face corrugated, non-corrugated, cardboard, etc.), folding cartons, trays, bowls, clamshells, bag, and others with or without covers or sleeves. The container 100 may be a cylindrical cup or a container having other geometrical configurations, including conical, rectangular, square, oval, and the like.

**[0035]** The outer wall104blank is not limited to a corrugated die cut blank, and may be constructed of any kind of paperboard, paper, foil, film, fabric, foam, plastic, and the like. The outer wall 104 may be made of any nominal paper stock, including but not limited to, natural single-face, white-topped single face, coated bleached top single-face, corrugate, fluted corrugate, paper, paperboard, virgin paper, recycled paper, coated paper, coated paperboard or any combination of these materials. The outer wall 104 may be removable from the container 100 or the outer wall 104 may

be adhered to the container 100. The outer wall 104 may be adhered, for example, by laminating the outer wall 104 blank onto the container, using a hot adhesive, cold glue and/or any other adhesive or sealing mechanism. Alternatively or in addition, the outer wall 104 blank may be adhered with an insulating material. If the outer wall 104 is attached to the cup during manufacture, such attachment may increase efficiency by eliminating the need to use an insulating sleeve by the end-user. Further, the attachment may decrease the amount of storage space required by an end-user, e.g., storing one item such as a double or multi-wall container as opposed to a container and a separate insulating sleeve.

**[0036]** Figure 1 is not necessarily drawn to scale. For example, the outer wall 104 may cover a larger or smaller portion of the surface of the container 100 than illustrated. For example, the outer wall 104 may provide full body coverage. Increasing the surface area of the outer wall 104 may provide a larger insulated area as well as a larger print surface. Although the drawing illustrates the outer wall 104 on a cup, the outer wall 104 may be added to any other containers, such as but not limited to, a bulk beverage container, press-formed container, and soup tub. The outer wall 104 may be added to a container as a wrap (Figures 2 and 3).

**[0037]** Figure 2 is a side cutaway view of a container 100, which may be a double wall cup with an inner wall 102 and an outer wall 104 or a single wall cup with a laminated board (including the inner wall 102 and the outer wall 104) and an expandable insulating material 216 between two material layers such as papers. A space 200 between the inner wall 102 and the outer wall 104 may be filled partially or wholly with the expandable insulating material, which may at least partially fill up after expansion of the insulating material from the application of heat such as from a microwave heater. The container 100 may be adapted to hold a liquid 206, whether hot or cold, as well as solid materials such as food. For cold beverage or food, the enhanced insulation of the container walls will help not only keep the beverage or food cold longer, but also reduce or eliminate moisture condensation on the outside of the container. The outer wall 104 can be joined with the inner wall 102 at the top and bottom to provide an enclosed gap in between.

**[0038]** The insulating material 216 may expand when the unexpanded heat-expandable microspheres (or other forming agents) added in it are activated by heat after the container 100 is formed. Alternatively or in addition, the insulating

material 216 may be pre-expanded, for example, by the inclusion of pre-expanded microspheres, air or inert gas, in situ air voids in the insulating material 216. The insulating material 216 may be activated by, for example, microwave or through other heating methods. The insulating material 216 may include, but not be limited to, an aqueous coating containing heat-expandable microspheres, adhesives, starch-based adhesives, natural polymer adhesives, inert gas foamed hot melt, synthetic material, foam coatings, or any combination of these or other materials. In one example, the insulating material 216 with heat-expandable microencapsulated microspheres may include a starch composition with a few, such as one to ten percent microspheres mixed into the insulating material 216. The insulating material 216may be biodegradable, compostable, and/or recyclable.

**[0039]** The insulating material 216may be expandable when wet or semi-dry, or dry depending on different formulations. The insulating material 216 may include any synthetic or natural binder material including aqueous-based materials, high solids, or 100% solid materials. The amount of solid content is typically 20% to 80% of the material, and more preferably 30% to 60%. Other ingredients may be added to the binder and/or insulating material 216, including but not limited to, pigments or dyes, mineral or organic fillers/extenders, surfactants for dispersion, thickeners or solvents to control viscosity for optimized application, foaming agents, additives like waxes or slip aids, moisturizer, salts for enhanced absorption of microwave energy, and the like. Alternatively, insulating material 216 may be an adhesive. The insulating material 216 may have several properties, including but not limited to: thermal insulation to keep container contents hot or cold; absorption of moisture condensation and/or liquid; may expand on contact with hot material (such as at temperatures of 150 °F or more); and may remain inactive until reaching a predetermined activation temperature. For example, the insulating material 216 would remain inactive at about room temperature. The insulating material 216 may be repulpable, recyclable, and/or biodegradable.

**[0040]** Figure 3 illustrates a cross section of an outer wall 104 in Figure 2, such as a sleeve or wrap assembled with the container 100. This figure is meant to be illustrative and not limiting. The cup may be replaced with any container, for example, a press-formed tray, a soup tub, or a bulk beverage container. The outer wall 104 may have an inner face 306 and an outer face 304. An insulating material

216 may be applied to the inner face 306, the outer face 304, and/or to a surface 302 between the inner face 306 and the outer face 304, such as to an inner wall of the sleeve. The inner face 306 and outer face 304 do not necessarily contain a space 302 there between.

**[0041]** An insulating material 216, such as a heat-expandable material with the heat-expandable microspheres in unexpanded form may be applied to an inner face 306 of the outer wall 104. The insulating material 216 may be applied as a full coat, film or in a pattern that does not materially alter the thickness of the outer wall 104 before expansion. Applying the insulating material 216 to the inside of the outer wall 104 may also maintain the printability of the outer face of the outer wall 104. If the insulating material 216 on the outer wall 104 is assembled, for example, with a standard paper cup, it may maintain the slim profile of the cup. In the alternative, the heat-expandable material may be activated by the microwaves to expedite expansion thereof during manufacturing, before being assembled as a wrap. This assures that the expandable adhesive/coating is expanded during manufacturing and provides for additional stiffness and strength after manufacturing and before use.

**[0042]** Figure4 is a view of an exemplary machine system 400 for manufacturing packaging substrate material that can be used later for making containers such as the container 100 discussed above. For example, but not limited to, the machine system 400 may be a conveyor-type machine system with a number of stages, such as the Asitrademicroflute lamination machine made by Asitrade AG of Grenchen, Switzerland, cited as merely one example. Other types of printer, coater and laminator can be used to make similar monolayer and multilayer substrate materials. Figure 4 provides three parallel views of a process: a view of the machinery, A, a view of a manner in which the sheet material may travel through the machine, B, and across-section view of the resulting manufactured product, C. The machine system 400 may extend longitudinally over a considerable length and may include a number of workstations along its length. The sheet materials assembled into the packaging material or substrate travel from right to left along the machine as displayed in Figure 4.

**[0043]** The machine system 400 may use a first sheet material 402 which may be provided in bulk as a roll or web. The first sheet material 402 may be fed into the machine system 400 and through the various steps of the process by a wheel-based,

belt-based, or other conveyance system. Figure 4 illustrates the use of a wheel-based system; for example, a conveyor belt (1213 in Figures 12-13) may be moved along by wheels 406 and a series of belts. Alternatively or additionally, as shown in Figure 4, the machine system 400 may use sheet material, which may be pre-printed. Different machine systems may use die-cut blanks of the particular packaging, for example, blanks of cups, containers, plates, clam shells, trays, bags or beverage container holders, among others, in which case the sheet material 402 can be blanks.

**[0044]** The first sheet material 402 may be composed of a generally flat material having some rigidity and being capable of being bent or scored to facilitate bending along determined lines. For example, the sheet material 402 may be single-face liner paper, for example but not limited to Kraft paper, clay-coated news board, white-top liner, containerboards, solid bleached sulfate (SBS) boards or other materials. The material may be treated, such as to provide increased water or fluid resistance and may have printing on selected portions of the material. Alternatively or additionally, the sheet material 402 may be composed of paper, paperboard, recycled paper, recycled paperboard, corrugated cardboard, chipboard, plywood, metalized paper, plastic, polymer, fibers, composite, mixtures or combinations of the foregoing, or the like. The first sheet material 402 may be made of recyclable materials or may be compostable, biodegradable, or a combination of these.

**[0045]** The first sheet material 402 may be conveyed by a roller 408 to a first workstation 420. The first workstation 420 may be a corrugating or coating or printing station. The first workstation 420 may also include a corrugating roll. The corrugating roll may shape the first sheet material 402, or other medium paper, into a series of waves or flutes. In the alternative, a monolayer or single sheet substrate may be passed in directly, without corrugation, as the first sheet material 402 or paper medium.

**[0046]** The first workstation 420 may also include an applicator, which may apply a securing material to a side, i.e. to the flute top, of the first sheet material 402 or to the side of other medium paper. For example, the applicator may have a trough containing a securing material, such as an adhesive, and coating roll applicator possibly with a metering tool, like rod or roll. The trough may be stationed near the corrugating roll such that the adhesive is applied to the tips of the waves or flutes generated by the corrugating roll. Additionally or alternatively, the securing

material may be applied by spraying, brushing, nozzle extrusion or otherwise. For example, an applicator may apply the securing material by spraying it onto a side of the first sheeting (or other medium paper) material 402. The spray from the applicator may be constant or intermittent and may create broken lines, stripes, dots, or ellipses of securing material. Designs and patterns may be applied by moving the applicator or by moving the first sheet material 402 relative to the sprayer.

**[0047]** The securing material may be, for example, an adhesive, a thermal insulating material 216, or other materials or coatings, for example, those with securing or bonding properties. Various expandable insulating materials 216 were previously discussed in detail. Furthermore, the securing material may be a hot melt or a non-hot melt adhesive or a cold set adhesive, for example a hot-melt adhesive, starch-based adhesive, natural polymer adhesive, cellulose-based adhesive, glue, hot melt glues, polymeric binders, synthetics, foams, and the like.

**[0048]** The securing material may be delivered to the applicator from a line 422, which may originate at a conditioning and preparation station 432. The microspheres or other expandable insulation material may be premixed with starch, a binder, or other additive material in the conditioning and preparation station 432 before delivery to the applicator of the first workstation 420.

**[0049]** In some embodiments, the applicator may apply a pattern of a heat-expandable coating to the first sheet material or other paper medium, referred to herein as a monolayer sheet, which is then heated by a microwave heater to cause the heat-expandable coating to expand. This coated and patterned monolayer sheet may then be sent to be processed into a final product having the patterned coating.

**[0050]** In still other embodiments, the first sheet material 402 may also be incorporated with a second sheet 404, for example, by pressing the second sheet material 404 to the first sheet material 402. The second sheet material 404 may be secured to the first sheet material 402 by the securing material resulting in a two-layer sheet material 426, such as single-face fluted sheeting as shown in Figure4, C. Alternatively or additionally, the laminated material 426 may be flat two layer laminate of different substrate material discussed earlier.

**[0051]** The two-layer sheet material 426 may then go past or through an industrial microwave heater 427, which may be built around the conveyor belt after the first workstation 420 to apply microwaves to the two-layer sheeting (Figure 12).

Moisture preferably remains within the heat-expandable insulating material 216 from the mixture prepared in the conditioning and preparation station 432. This moisture is susceptible to absorption of microwave power emanating from the microwave heater 427, and thus heats up rapidly, causing to expand the insulating material 216 of the adhesive/coating applied by the applicator under the appropriate processing conditions, e.g., temperature, pressure and time.

**[0052]** The microwave heater 427 is preferably a planar type operated at or near about 915 MHz or about 2.45 GHz, or at some other acceptable frequency. The microwave heater 427 may also be a tubular or other type of microwave heater that includes microwave applicators. These types of industrial microwave heaters may be used to dry water-containing mixtures or products, which contain polar molecules that absorb the electromagnetic energy in the microwave field, resulting in heating and drying the water, and sometimes in cooking the products. If planar, the microwave heater 427 may include a narrow, open slot in between two panels of the microwave guides or channels for a paper web or other substrate to go through, as seen in Figures 12-13. If the microwave heater is tubular, product with tubular or round cross section can be transported through microwave applicators of the heater in a desirable configuration. The microwave heater 427 may not only dry the paper web or substrate, but activate and expand the expandable materials pre-applied between or onto the paper layers.

**[0053]** The microwave heater may be designed differently or configured to heat the heat-expandable coatings and adhesives in substrate material or in products at different points during a manufacturing process, as illustrated and discussed with reference to Figure 11.

**[0054]** The temperatures at which the microwave heater 427 may heat the substrate or product containing the heat-expandable materials such as microspheres may range between 100 and 500 degrees Fahrenheit. The temperature may vary greatly depending on the type of microspheres used and the thickness of the material substrate and binder being heated. For example, some commonly used microspheres are heated to temperatures ranging between 200 and 350 degrees Fahrenheit.

**[0055]** The two-layer material sheet 426 may exit the machine system 400 and go on to further processing such as die cutting, printing, conditioning, folding, and the like, which results in a final product. Alternatively, the two-layer sheet material 426 may be further processed by the machine system 400 as described below. Note that the microwave heater 427 may be alternatively located along stations of further processing down the machine system 400. For example, an expandable adhesive or coating may be applied at a later stage in the process, after which, at some point, the microwave heater 427 may be positioned to expand the adhesive/coating, as discussed later. The location of the microwave heater 427 is therefore not critical, but some locations may be better for ease-of-attachment to the machine system 400 parts or may be better-applied at further steps of the manufacturing and product preparation processes.

**[0056]** The two-layer material sheet 426 may be conveyed to a second workstation430. The second workstation 430 may include an applicator, which may apply a securing material to a side of the two-layer sheeting 426. For example, the applicator may apply a securing material to the second sheet material 404 side of the two-layer sheeting 426, which may be the liner side of the two-layer sheeting 426. Alternatively or additionally, the applicator may apply a securing material to the first sheet material 402 side of the two-layer sheeting 426. The securing material may be or include an expandable adhesive or insulation coating. For example, the securing material may be an adhesive, for example a hot-melt adhesive starch-based adhesive, natural polymer adhesive, cellulose-based adhesive, glue, hot melt glues, cold set glues, binder, synthetics, polymeric binder, foams, and the like.

**[0057]** The securing material may be applied by spraying, brushing, or otherwise. For example, the applicator may have a trough containing a securing material and a metering tool. The trough may be stationed near the roll, which feeds the paper into the second workstation430 such that the securing material is applied to the tips of the waves or flutes generated by the corrugating roll. As a second example, an applicator may apply the securing material by spraying it onto a side of the first sheeting material 402, the second sheeting material 404, or both. The spray from the applicator may be constant or intermittent and may create broken lines, stripes, dots, or ellipses of securing material. Designs and patterns may be applied

by moving the applicator or by moving the first sheet material 402 relative to the sprayer.

**[0058]** The two-layer sheeting material 426 may be incorporated with a third sheet material 434, which may be a second liner, for example, by pressing the third sheet material 434 to the two-layer sheeting 426, creating a three-layer sheet material 434.

**[0059]** The three-layer sheet material 434 may be composed of a generally flat material having some rigidity and being capable of being bent or scored to facilitate bending along determined lines. For example, the three-layer sheet material 434 may be single-face liner paper, for example, but not limited to, Kraft paper. The material may be treated, such as to provide increased water or fluid resistance and may have printing on selected portions of the material. Alternatively or additionally, the third sheet material 434 may be composed of corrugated cardboard, chipboard, SBS, metalized paper, plastic, polymer, fibers, composite, mixtures or combination of the foregoing, or the like. The third sheet material 434 may be made of recyclable materials or may be compostable, biodegradable, or a combination of these.

**[0060]** The second workstation 430 may be a printer, coater or laminator. The layers of the multilayered sheeting, such as the three-layer sheet material 434, may improve the structural integrity and appearance of the resulting packaging material. The microwave heater 427 may alternatively be located at or near the second workstation 430 to radiate with microwave energy the multilayered sheeting passing through the second workstation 430, during lamination, for example. The microwave heater 427 may then rapidly heat, and thus expand, the adhesive or coating—that contains heat-expandable components such as microspheres—applied to the multilayered sheet as the securing material. The multilayered sheet material leaving the second workstation 430 may be further conditioned, cut or die-cut, and stacked for shipping, as will be discussed in more detail with reference to Figure 11. The multilayered sheet material may then be formed into the container 100.

**[0061]** Several lab feasibility tests have been performed using a common office microwave oven and a pilot planar, industrial microwave heater. E-flute single-face corrugate board and F-flute single-wall corrugated board were used as substrates in these tests. The results from these tests confirmed the feasibility of activating and

expanding the heat-expandable adhesive and coatings sandwiched between medium and liner. The tests also showed an enhancement in drying and reducing steam energy consumption. The tests also revealed that it is beneficial to design a suitable microwave energy field inside the microwave applicator to achieve optimal expansion efficiency of the heat expandable adhesives and coatings, and consequently increase line speed.

**[0062]** As one of the examples of the pre-activation method described earlier, Figure 5 is a side view of a vacuum conveyor 500 through which blanks 503 may be coated with heat-expandable material in any desirable pattern. The vacuum conveyor 500 may be used independently or integrated into portions of an automated manufacturing system. The vacuum conveyor 500 may include a vacuum motor 510 that spins in the direction of desired travel of a conveyor belt 513, which direction is shown with a solid black arrow in Figure 5.

**[0063]** A plain or printed blank 503 that may be a mono or multi-layer sheet material, for example, but not limited to sheet material made from the machine system 400 discussed above, may be processed through the vacuum conveyor 500. In one example, the blank 503 is for use in a cup or in a double wall cup. A glue gun (or coating or printing station) 505, or other applicator 505, may apply wet, heat-expandable material 216 containing microencapsulated particles 506. A microwave heater 427 or other source of heat energy supplies the energy to activate and expand the particles 506, causing the particles to expand into expanded particles 508. The expanded particles 508 may form a pattern on the blank 503 of a certain desirable height. The height of the expanded particles may vary to some degree.

**[0064]** The vacuum motor 510 of Figure 5 may be used to help hold the blank 503 flat to allow uniform application of a proper amount of heat-expandable coating in a design pattern. In order to accomplish the proper delivery of the wet particles 506, a controller that drives the vacuum motor 510 may tightly control the RPMs of the vacuum motor. Alternatively or additionally, the glue gun or coating station 505 may be controlled in turning on and off, such as to intermittently lay down the proper amount of heat expandable material containing particles 506 in a design pattern on each respective blank.

**[0065]** A tamper or sizing device 509 such as a wheel, block or nip rolls may be used to tamper down the expanded particles 508 to a relatively uniform

predetermined height. A vision inspection or detection system 512 may then detect the quality of the expanded particles 508, for quality control before further processing, e.g., by a double wall cup or container-building machine.

**[0066]** Figure 6 is a modified mandrel 600 adapted with one or two raised strips 605 having vacuum holes 601 in each raised strip 605 (where Figure 6 shows only one raised strip by way of example). The raised strip 605 may be adapted at a height of approximately (or substantially) the uniform height of expanded particles 508 shown in Figure 5. The height of the raised strip 605 is about the same as or slightly higher than the height of the expanded particles 508 to allow a smooth and proper wrap around of each blank 503 with expanded particles 508 onto the mandrel 600 to form a proper-fitting cup wrap for a double wall cup.

**[0067]** Figure 7 is an example of an outer wall blank 703 having a patterned coating 715 of heat-expandable material 216 having a gap 723 through which one of the raised strips 605 of the mandrel 600 may be located. In this way, the vacuum holes 601 may still create a sufficient suction on the smooth part of the inside of the blank 703 with which to hold the blank 703, which is wrapped around the mandrel to be transported. After the blank 703 is formed into an outer wrap of a cup, a single wall cup is placed inside the formed wrap in an automated process to make a double wall cup.

**[0068]** Figure 8 is a perspective view of a vacuum conveyor 800 using the mandrel 600 such as that described with reference to Figure 6 to transport a blank having heat-expanded particles adhered to an inner side of the blank. The vacuum conveyor 800 may receive the blanks 503 from the vacuum conveyor 500 of Figure 5. The mandrel 600 may position one of its raised strips 605 within the gap 723 in the heat-expanded pattern 715 of heat-expanded particles of the blank 503 and the other raised strip 605 underneath a seam area of the wrap of the blank 503, e.g., where edges of the blank meet together to form the wrap. The vacuum holes 601 of the raised strips help holding the wrap around the mandrel 600, making it possible to remove the blank 503 from the vacuum conveyor 800 and transport the blank 503 through the cup outer wrap forming step.

**[0069]** In the steps taken in Figures 5-8, a machine assembly is made operable to build a double wall cup in a manner in which the heat-expandable material 216 on the substrate (blank 503) is first expanded before construction of the container (the

double wall cup), which was previously referred to as the pre-activation method. As will now be explained, in a post-activation method, a double wall cup may also be constructed by first constructing the cup in a machine assembly process, and then later expanding the heat-expandable microspheres existing within the heat expandable material 216, to construct the insulating double wall cup.

**[0070]** As one non-limiting example of the many post-activation methods, Figures9 and 10 show a perspective view of a cup-building machine 900. The cup-building machine 900 may include a set of glue guns 505, a pulley 908, a rod 910 and a belt 912. The machine 900 may also include a wheel 1001 operatively attached to the rod 910 and including multiple spokes 1010. The wheel 1001 may rotate in a direction tangential to the spoke 1010 while the cup on the cup mandrel 600 may spin about an axis parallel with the spokes 1010 when engaged by the rod 910. A mandrel 600 may be attached to the end of each spoke 1010. In the depicted embodiment, an inner cup 1020 of a double wall cup is prepared for adhesion to an outer wrap 1022 of the double wall cup (Figure 10).

**[0071]** As the belt 912 is pulled, the pulley 908 is turned in the direction of the narrow arrow, causing the rod 910 to also be turned, which in turn rotates the inner cup 1020 on mandrel 600. As the inner cup 1020 rotates, the glue guns 505 spray the heat-expandable material 216 onto the outer wall of the inner cup 1020. The material application guns or nozzles are offset to enable multiple and separate lines of adhesives 216 to be applied on the outside of the inner cup 1020 with predetermined spacing between the lines. The revolutions per minute (RPM's) of the speed at which the rod 910 turns may include a tight tolerance, e.g., the timing may be such so that the coating from the guns 505 is properly spaced and uniformly spread: not too thick, not too thin. The wheel 1001 may then be rotated to repeat on the inner cup 1020 of the next spoke, e.g., rotating clockwise (in direction of thick arrow). Each coated inner cup 1020 may then be inserted into the next outer wrap, thus forming a double wall cup.

**[0072]** The double walled cup that is formed may then be transported, stacked, bagged and placed in cartons that will be shipped on pallets. As will be explained with reference to Figure 11, the microwave or other heat may be applied at the various stations after the cup has been formed to post-activate the heat expandable material 216, in addition to before the cup has been formed.

**[0073]** Figure 11 is a flow diagram 1100 of multiple workstations of the packaging product container manufacturing process at or between which microwave heat may be applied to expand heat-expandable microspheres (or other heat-expandable microparticle material) incorporated as a part of substrate layers of packaging substrates and/or containers. The manufacturing process includes the conveyance of the packaging substrates or containers between the workstations. That the workstations are numbered sequentially does not mean that an order is required, except where stated. Microwave heat may be applied to the substrate or containers at more than one workstation during the manufacturer assembly process, such that heat-expandable materials may be expanded during more than one manufacturing stage to achieve the desired final expansion of the heat-expandable materials.

**[0074]** In addition to the first workstation 1120, the machine system 400 may include a printing workstation 1125 configured for printing the substrate used to make containers that will be ultimately assembled for shipping. The printing ink may include heat-expandable microencapsulated microparticles. A microwave heater 427 may be used during or after printing to heat up the sheet material and the securing material to expand, at least to some extent, the microspheres or other heat-expandable compounds within the printing material.

**[0075]** As discussed with reference to Figure 4, the second workstation 430 may be configured to apply a coating in any pattern or lamination to the packaging substrate material that has already been formed. The coating or laminating process may include application of additional layers of sheeting material or coating/laminating the multi-layered substrate, such as to improve the structural integrity and appearance of the resulting packaging material. A microwave heater 427 may then be used at some point thereafter to heat up the sheet material and the coatings applied during lamination to expand, at least to some extent, the microspheres or other heat-expandable compounds within the coating and/or securing material.

**[0076]** Adie cutting station 1140 may be configured to perform die cutting, either rotary die cutting, or platen die cutting or both, the result of which may include blanks 1143 that may be formed into a finished product. The blanks may include, for example, blanks 1143 of cups, containers, plates, clamshells, trays, bags

or beverage container holders, among others. A microwave heater 427 may then be used to heat up the blanks to expand, at least to some extent, the microspheres or other heat-expandable compounds within any coating, lamination or securing materials of the blanks 1143, when having not yet been expanded.

**[0077]** A forming workstation 1150 may be configured to form finished products 1153 from the blanks 1143.A microwave heater 427 may then be used to heat up the finished products 1153 to expand, at least to some extent, the microspheres or other heat-expandable compounds within any coating, lamination or securing materials of the finished products 1153, when having not yet been expanded.

**[0078]** A cartoning workstation 1160 may be configured to package the finished products 1153 into a shipping carton such as a regular slotted carton. The output from the cartooning workstation 1160 includes stacked cartons 1163 packed full of the finished products 1153. A microwave heater 1127 may be used to heat through the shipping cartons 1163—during the cartoning process or after they are stacked—to expand, at least to some extent, the microspheres or other heat-expandable compounds within any coating, lamination or securing materials of the finished products 1153 packed in the shipping carton 1163, when having not yet been expanded.

**[0079]** Where the containers are cups or container, these may be conveyed through a tube that is part of the forming workstation 1150. A microwave heater 427 may be oriented around a portion of the tube through which the cups or containers travel to heat up the heat-expandable materials, when having not yet been expanded, in route as the cups or containers are sent through the tube to be packed in cartons and palletized.

**[0080]** A palletizing workstation 1170 may be configured to receive the stacked cartons of product containers onto pallets. A microwave heater 427 may be used to heat up a pallet of stacked cartons or containers to expand, at least to some extent, the microspheres or other heat-expandable compounds within individual product packed in the cartons, but for an entire pallet at a time, when having not yet been expanded. The pallets may then be loaded onto trucks for shipping at a shipping workstation1290.

**[0081]** Figures 12 through 15 include various schematic views of the microwave applicator guide(s) that may be used for the microwave heater 427, which may be installed around one or more conveyor belts 1213 that convey the paperboard, sheet material, or other substrate through the machine system 400. The microwave heater 427 of may be a planar type having a slot 1405through which the web, sheet, or blank material passes. Figure14 shows a cross-machine side view while Figure 15 shows a front or machine-direction view of the microwave heater 427. The microwave heater 427 may include a number of micro-waveguide channels that are connected together to provide increased surface area with which to apply microwave energy to the sheet material. The dimensions displayed in Figures12 through 15 of the microwave heater 427 are but exemplary and not meant to be limiting. When tubular microwave applicator is used for 427, the cross section of the tubular applicator is generally circular, and there is an opening through the applicator to allow product to pass through.

**[0082]** Figure16 is a flow chart of an exemplary method for manufacturing a multilayer sheet material in a process that includes microwave heating of the multilayer sheet material to expedite expansion of a heat-expandable adhesive or coating. The dashed lines in Figure17indicate optional routes that may bypass one or more steps of the method. At block 1600, a first sheet material may be loaded into the machine system 400 and may be corrugated. At block 1610, a securing material may be applied to a side of the first sheet material. The securing material may be a heat-expandable adhesive or coating, which may include a starch and microspheres or some other composition. At block 1620, a second sheet material may be applied to the first sheet material. If this two-layer sheet material has a securing material that includes the heat-expandable coating, the two-layer sheet material may be heated at block 1630 with microwave energy to expand the heat-expandable adhesive/coating. At block 1640, the two-layer sheet material may be conveyed to processing into a final product, such as by printing, die cutting, removing from blanks, and/or being assembled.

**[0083]** At block 1650, a second securing material may be applied to a side of the two-layer sheet material. The second securing material may be a heat-expandable adhesive or coating, which may include starch and microspheres and/or some other adequate composition. Following this step, the multilayer sheet material may skip

forward certain steps and get heated and/or laminated without first having a third sheet material applied. Otherwise, at block 1660, a third sheet material may be applied to an exposed side of the first or second sheet materials. At block 1670, if the second securing material is a heat-expandable adhesive or coating, the multilayer sheet material may be heated with microwave energy to expand the heat-expandable adhesive or coating. At block 1680, the multilayer sheet material may be laminated. That is, if the first, second, and third sheet materials have been applied together, then the first, second and third sheet materials may be laminated together at block 1680. At block 1640, the multilayer sheet material or substrate may then be processed into a final product, which may include printing, die cutting, being removed from blanks, and/or being assembled. In addition, or alternatively, microwaves may be applied to the multilayer sheet material or substrate at any of these various stages (or workstations), including but not limited to: printing, coating and/or laminating, die cutting, forming, cartoning RSC and preparing pallets of cartons or containers for shipment.

**[0084]** For example, the resulting multilayer sheet material may be further processed such as by application—and subsequent removal of—packaging blanks from the sheet material and assembly of the blanks into the final product (block 1640). The final product of the process (which may be, e.g., a cup, container holder, containers sleeve, clamshell, tray, and the like) may be made of one or more layers of one or more of the aforementioned materials. Where multiple layers of material are used, they may be joined such as, but not limited to, being laminated, glued, or otherwise fastened together for increased strength.

**[0085]** As mentioned, use of the insulating material 216 may help to reduce the thickness of paper needed to make the container, sleeves, etc., while maintaining bulk of the laminated substrate and provide a more rigid feel to the consumer. The insulating material 216 may also improve insulation properties of the container, and to help keep the beverages or foods warm or cold longer, depending on the application. The substrates may be made of natural fibers, synthetic or both, such as natural or bleached paper, natural or bleached paperboard or boxboard with or without recycled fibers. In combination, the features and processes disclosed herein add significant flexibility and versatility to the conventional converting processes and broaden choices available to packaging converters to address any limitation of

substrate supply in the supply chain. For example, laminates of two thin liner papers may be used to make a bulkier paper with an expanded adhesive between the thin papers with the same or better thermal insulation as a thicker paperboard. Hot sandwich wraps could be made of such a material, which can be more flexible than paperboard. As an additional example, laminates may be manufactured of a low gauge poly coated SBS board and a clay coated news board with the expandable adhesives therebetween. As an additional example, drinking cups for hot or cold fluids may be manufactured to include a laminate of two different low gauge boards with the expandable adhesives therebetween. The expandable adhesives can be activated during lamination, before or after the cup is formed. The expandable adhesive can also be applied in pattern to achieve localized expansion and therefore localized rigidity and insulation improvement.

**[0086]** While various embodiments of the invention have been described, it will be apparent to those of ordinary skill in the art that many more embodiments, variations and implementations are possible that are within the scope of the invention. For example, steps of a method as displayed in the figures or reflected in the below claims do require a specific order of execution by the way they are presented, unless specified. The disclosed steps are listed as exemplary such that additional or different steps may be executed or the steps may be executed in a different order.

WE CLAIM:

1. A method for manufacturing, comprising:

positioning blanks on a conveyor system;

applying heat-expandable particles in a pattern on the blanks as a belt of the vacuum conveyor system moves the blanks below an applicator;

heating the particles with a microwave heater to expand the particles; and

sending the blanks along the conveyor system to a product-building machine that assembles products from the blanks.

2. The method of claim 1, further comprising:

tampering the expanded particles to a uniform height by a sizing device before sending the blanks to the product-building machine.

3. The method of claim 1, where applying the particles further includes leaving a gap in the pattern of the applied particles, the gap configured to correspond to a raised strip of a mandrel that vacuum-grips the blanks from a side of the applied particles, to move the blanks within the product-building machine.

4. The method of claim 3, further comprising:

controlling a speed of the belt of the vacuum conveyor system such as to apply the particles evenly in the pattern on respective blanks.

5. The method of claim 1, where the blanks comprise outer wraps and the products comprise double wall cups.

6. A blank moving device, comprising:

a frustoconical mandrel; and

a raised strip formed on a side of the frustoconical mandrel, the raised strip including vacuum holes adapted to grip, with vacuum suction, a side of a blank comprising an applied pattern of expanded microencapsulated particles.

7. The blank moving device of claim 6, where the raised strip is configured to match a gap left in the applied pattern of expanded microencapsulated particles of the side of the blank.

8. The blank moving device of claim 6, where a height of the raised strip above the surface of the frustoconical mandrel comprises at least about a height of the expanded microencapsulated particles.

9. The blank moving device of claim 6, where the raised strip comprises a first strip, further comprising:

a second strip formed in another location of the side of the frustoconical mandrel for alignment of a seam of outside edges of the blank.

10. A method for manufacturing double wall cups with heat-expandable material between the inner and outer wall, comprising:

forming an outer wrap for a double wall cup;

forming an inner cup;

applying an adhesive to an outer surface of the inner layer with an applicator, the adhesive having microencapsulated, heat-expandable particles;

conveying and inserting the inner cup into the outer wrap within the cup-building machine; and

heating the double wall cup with a microwave heater to expand the particles in the adhesive.

11. The method of claim 10, where the adhesive comprises a coating.

12. The method of claim 10, further comprising:

conveying the double wall cup through a tube passing through the microwave heater to expand the particles and to subsequently be stacked in preparation for bagging.

13. The method of claim 12, where the double wall cup is heated with the microwave heater while stacked with other double wall cups.

14. The method of claim 12, further comprising:

packaging double wall cups into cartons, where each carton is heated with the microwave heater to activate and expand the heat-expandable adhesive in the double wall cups.

15. The method of claim 14, further comprising:

stacking the cartons of the double wall cups with the heat expandable adhesive onto a pallet, where the adhesive in the cups is activated and expanded with the microwave heater.

16. The method of claim 10, further comprising:

spinning the mandrels past the applicator to facilitate applying the adhesive onto the outer surface of the inner layer; and

controlling the speed of the spinning to uniformly apply the adhesive.

17. The method of claim 10, where the microwave heater is selected from a group of different types of industrial microwave heaters consisting of tubular, planar and non-tubular microwave applicators adopted to radiate individual cup flow or a stack of cups.

18. A method for manufacturing packaging substrate material and containers, comprising:

passing at least first and second sheet materials into a conveyor-type machine system;

forming a substrate from the first and second sheet materials, and from an adhesive containing microencapsulated, heat-expandable particles positioned between the first and second sheet materials;

forming packaging containers from the substrate;

conveying the packaging containers to be shipped; and

heating the adhesive with a microwave heater at some point during the passing, the forming, and the conveying, to expand the microencapsulated, heat-expandable particles, where the microwave heater is employed at or between one or

more workstations selected from the group consisting of: printing, coating or laminating, die cutting, forming, stacking, cartoning and palletizing.

19. The method of claim 18, where the microwave heater comprises a microwave applicator surrounding a space through which the substrate passes or through which the packaging containers pass.

20. The method of claim 18, further comprising processing the substrate including:

coating or printing on the multilayer substrate with a material including the microencapsulated, heat-expandable particles;

die cutting the multilayer substrate to produce blanks; and

forming the packaging containers from the blanks.

21. The method of claim 20, where the packaging containers are selected from the group consisting of: folding carton containers, hot and cold cups, clamshells, fluted sleeves, bags, and boxes.

22. The method of claim 20, further comprising:

laminating the multilayer substrate after printing and before die cutting.

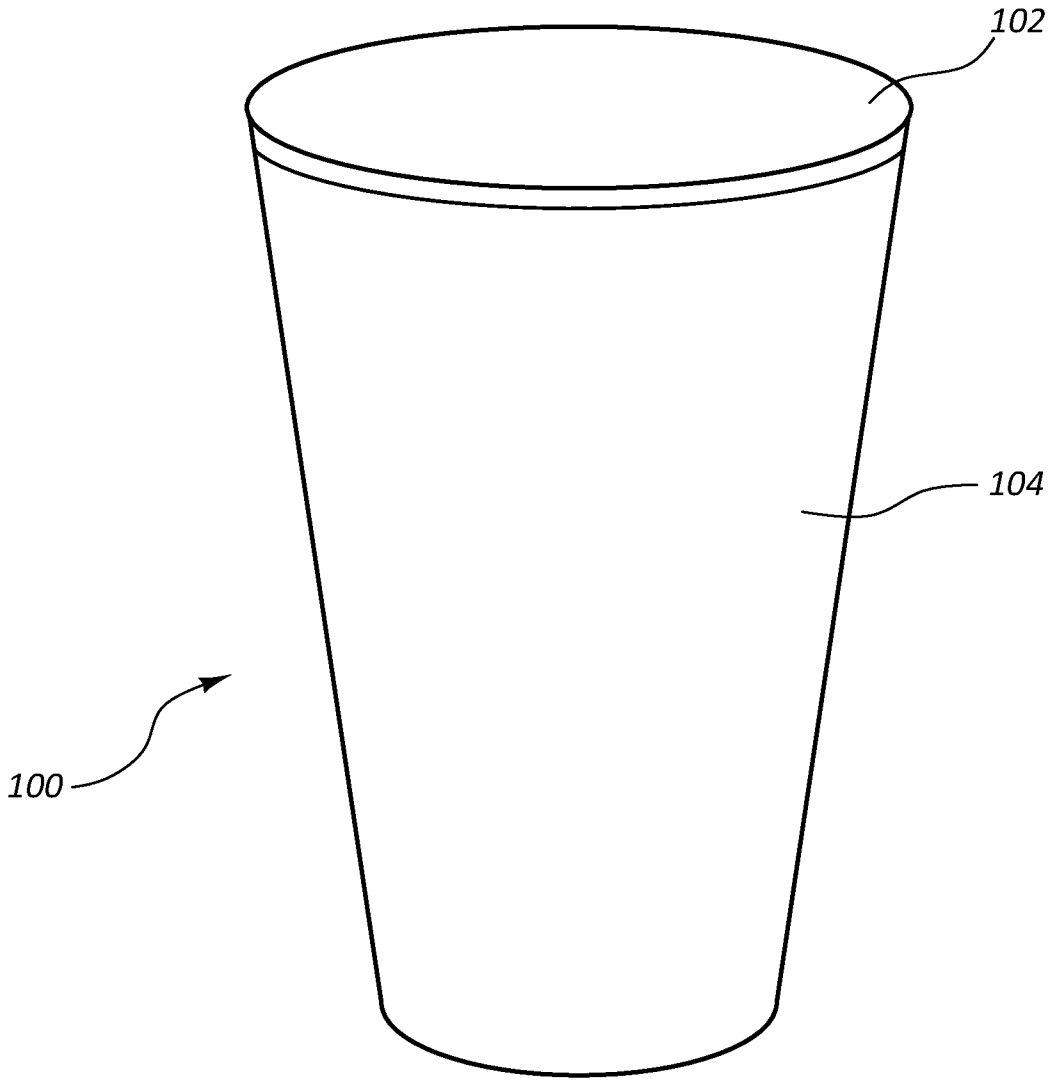


FIG. 1

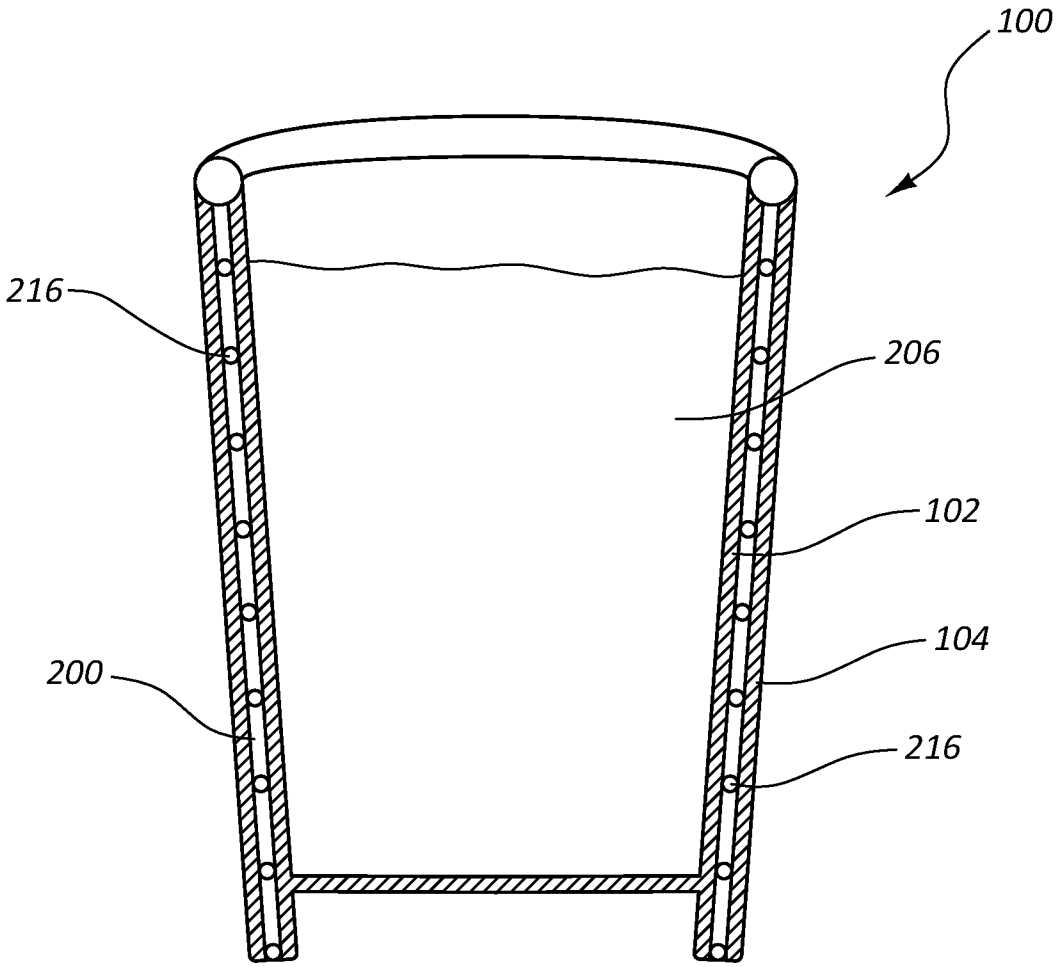


FIG. 2

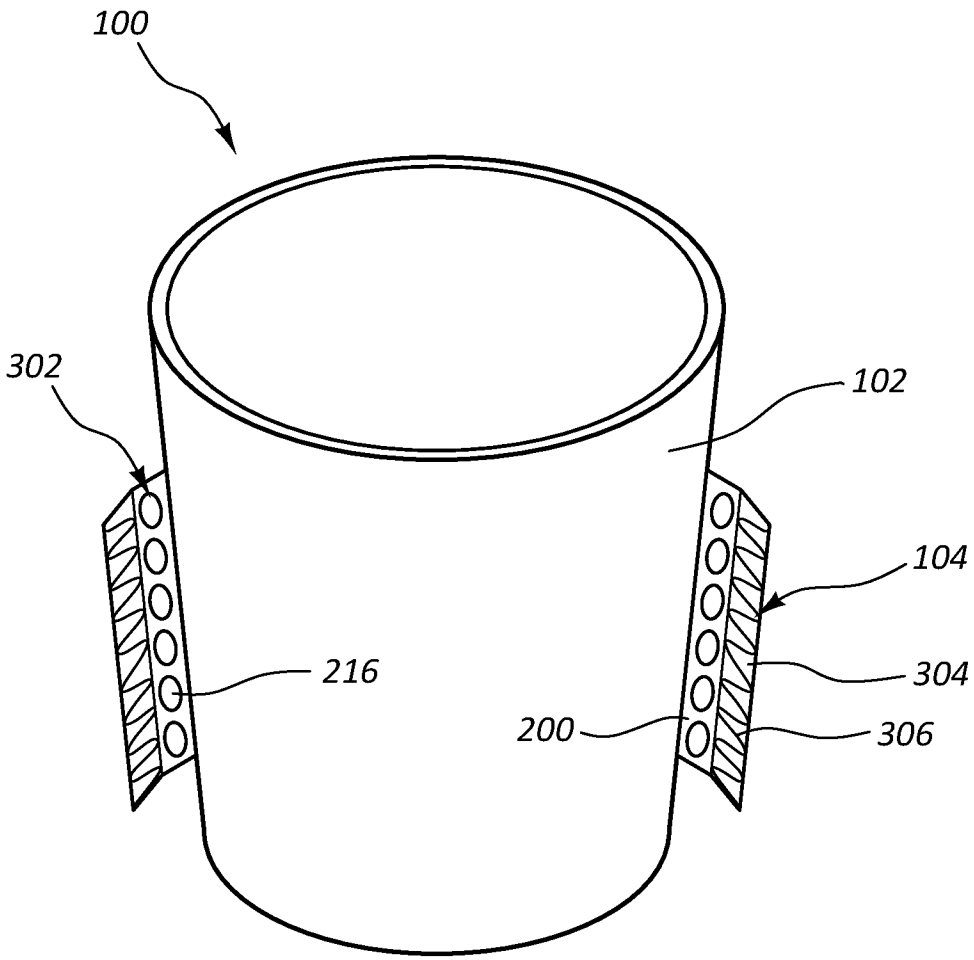


FIG. 3

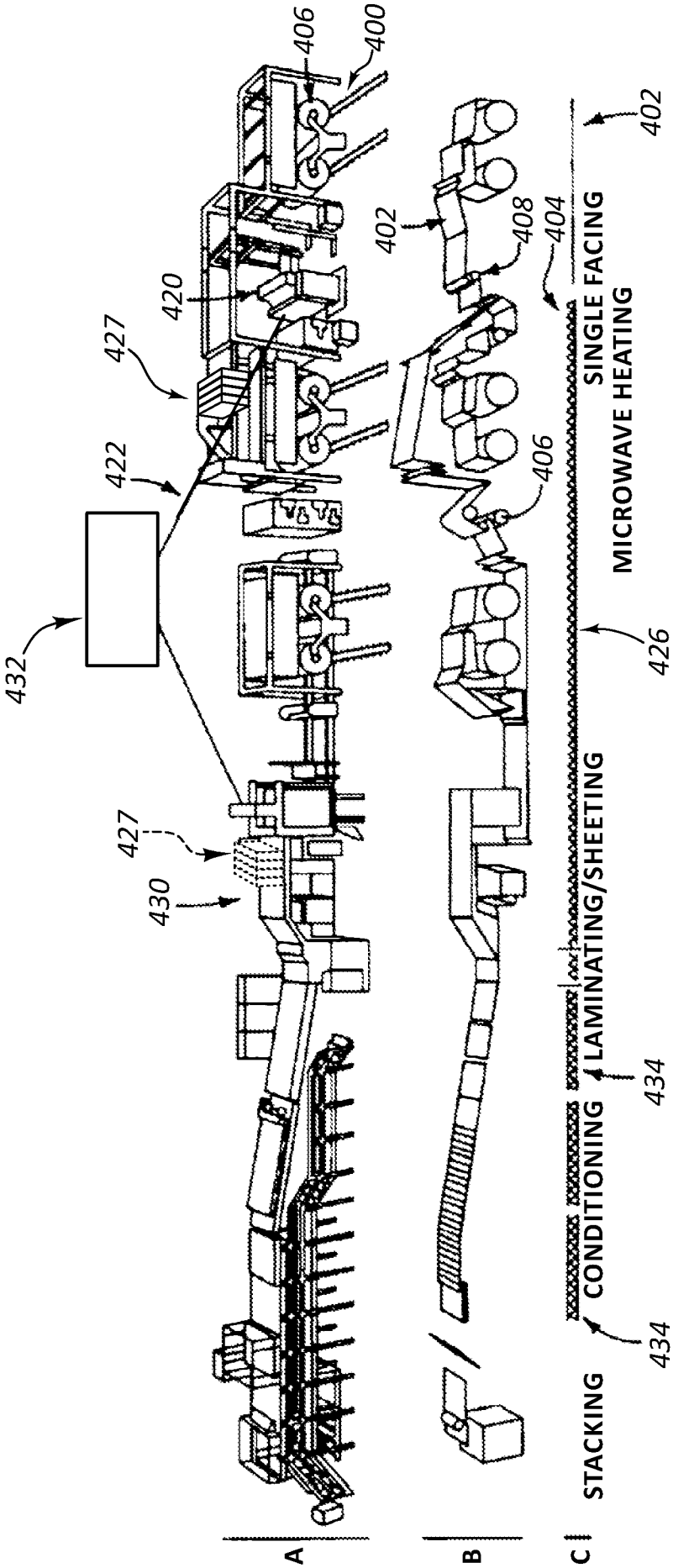
406
400
420
427
422
432
427
430
402
408
404
406
402
SINGLE FACING
MICROWAVE HEATING
426
LAMINATING/SHEETING
434
CONDITIONING
434
STACKING
A
B
C

FIG. 4

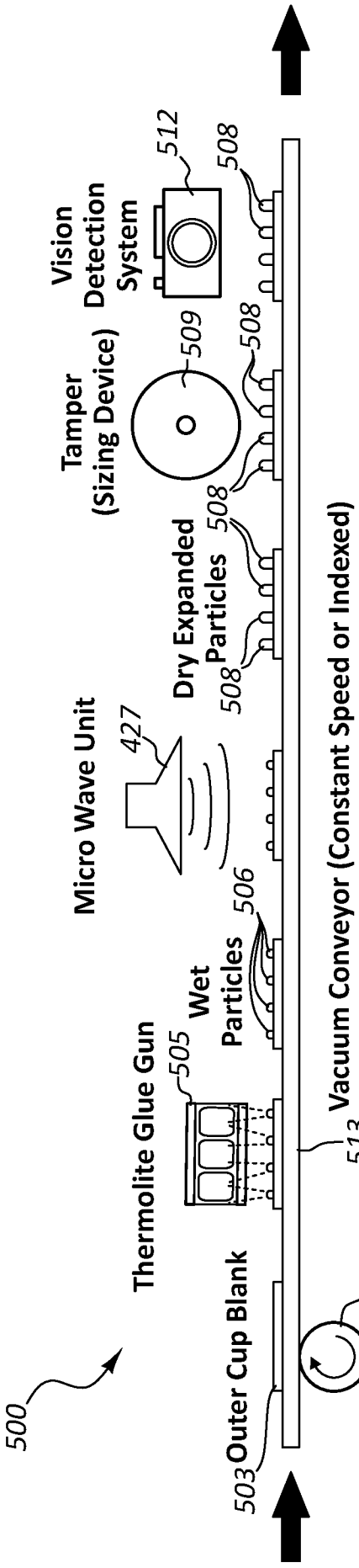
500
503
Outer Cup Blank
Thermolite Glue Gun
505
Wet Particles
506
Micro Wave Unit
427
Dry Expanded Particles
508
Tamper (Sizing Device)
509
Vision Detection System
512
Vacuum Conveyor (Constant Speed or Indexed)
513
Vacuum Motor
510

FIG. 5

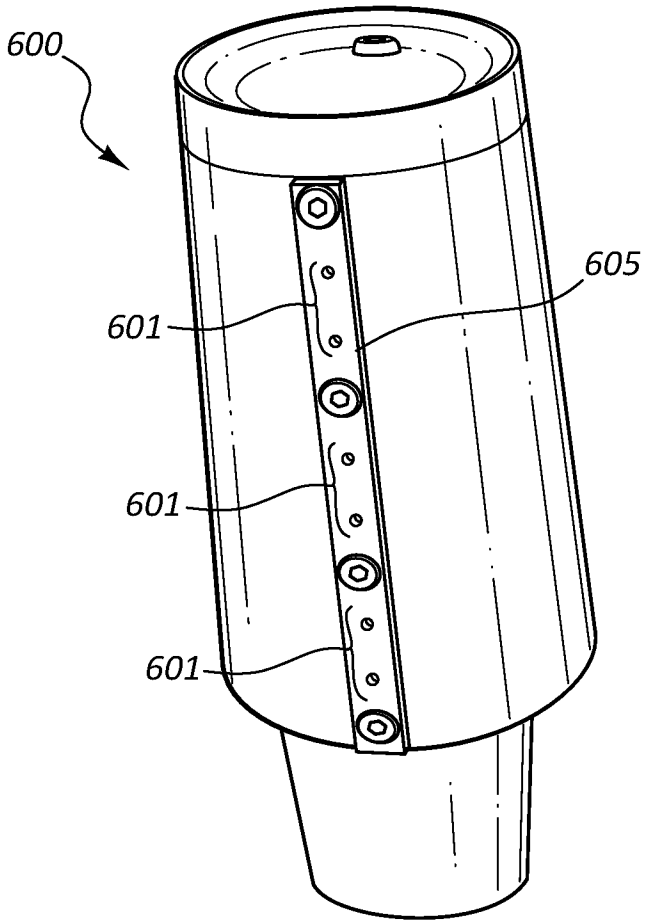


FIG. 6

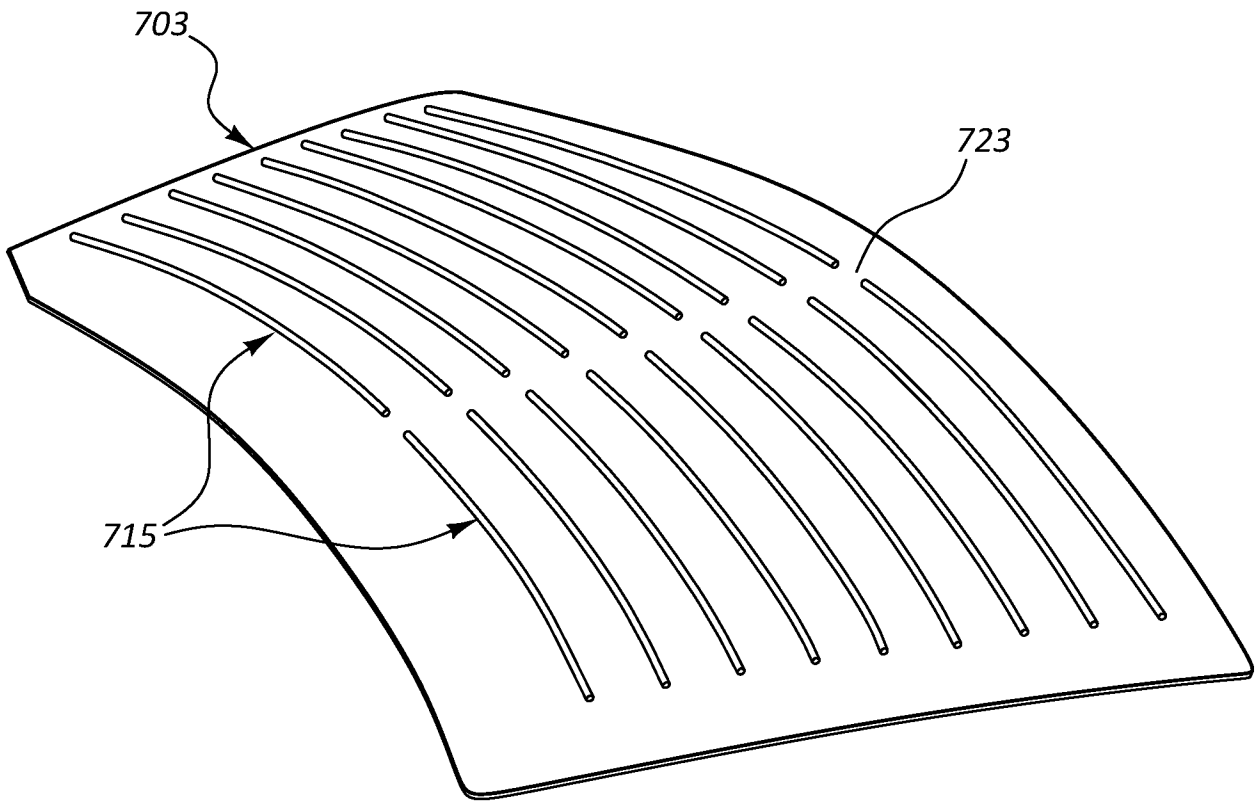


FIG. 7

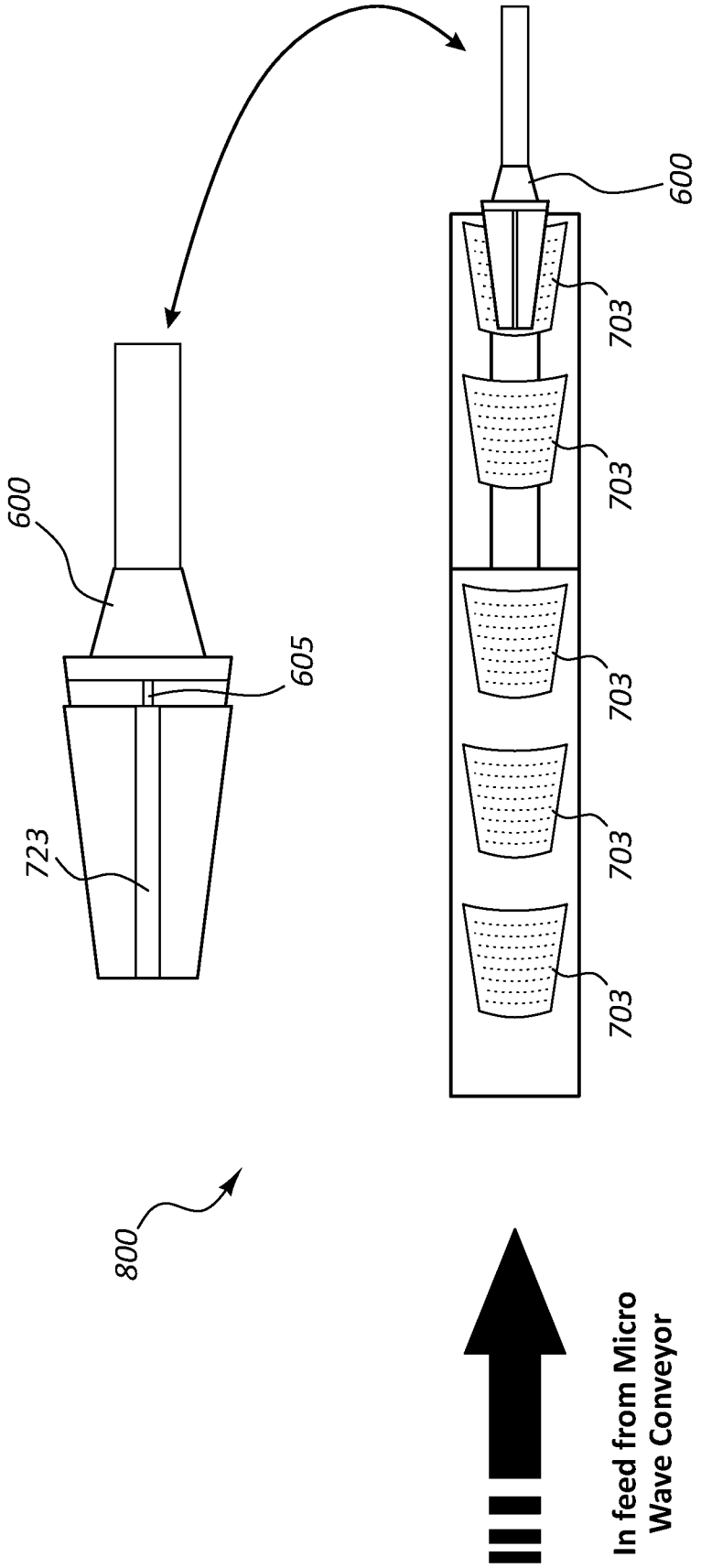
600
703
703
703
703
703
600
605
723
800
In feed from Micro Wave Conveyor

FIG. 8

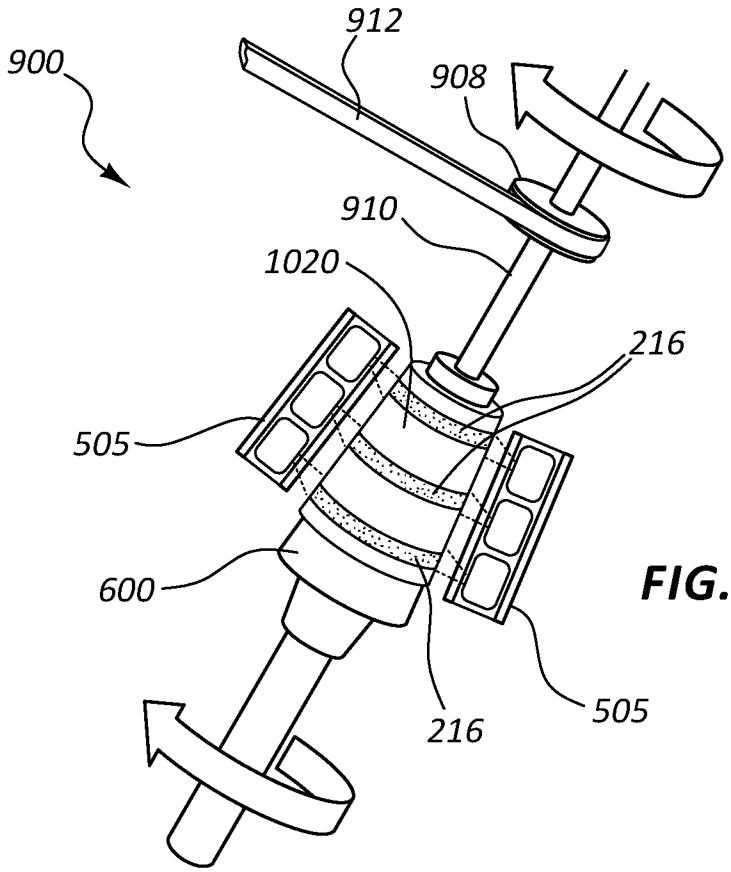
900
912
908
910
1020
216
505
600
216
505

FIG. 9

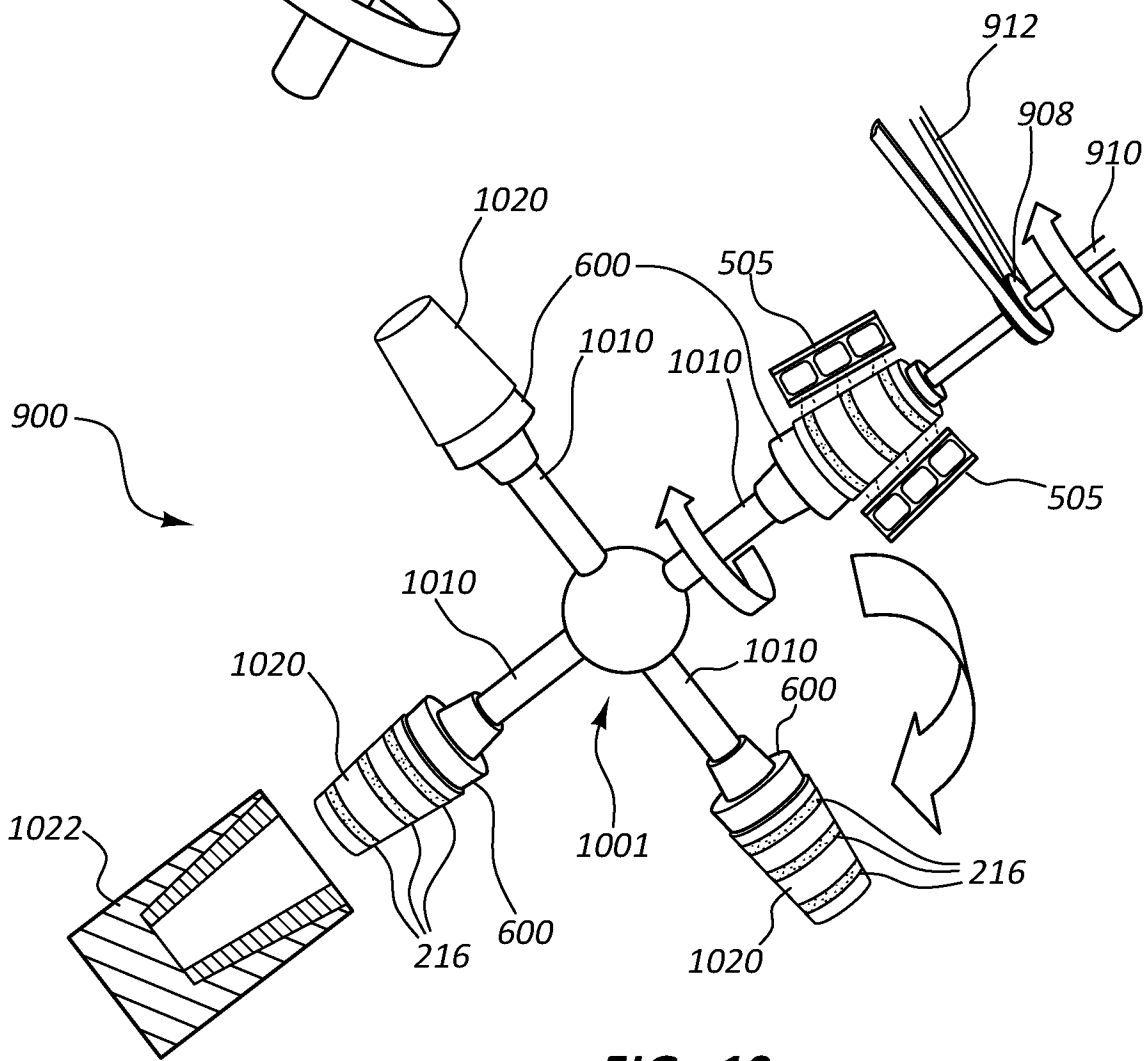
912
908
910
1020
600
505
1010
1010
900
505
1010
1010
600
1020
1022
1001
216
600
216
1020

FIG. 10

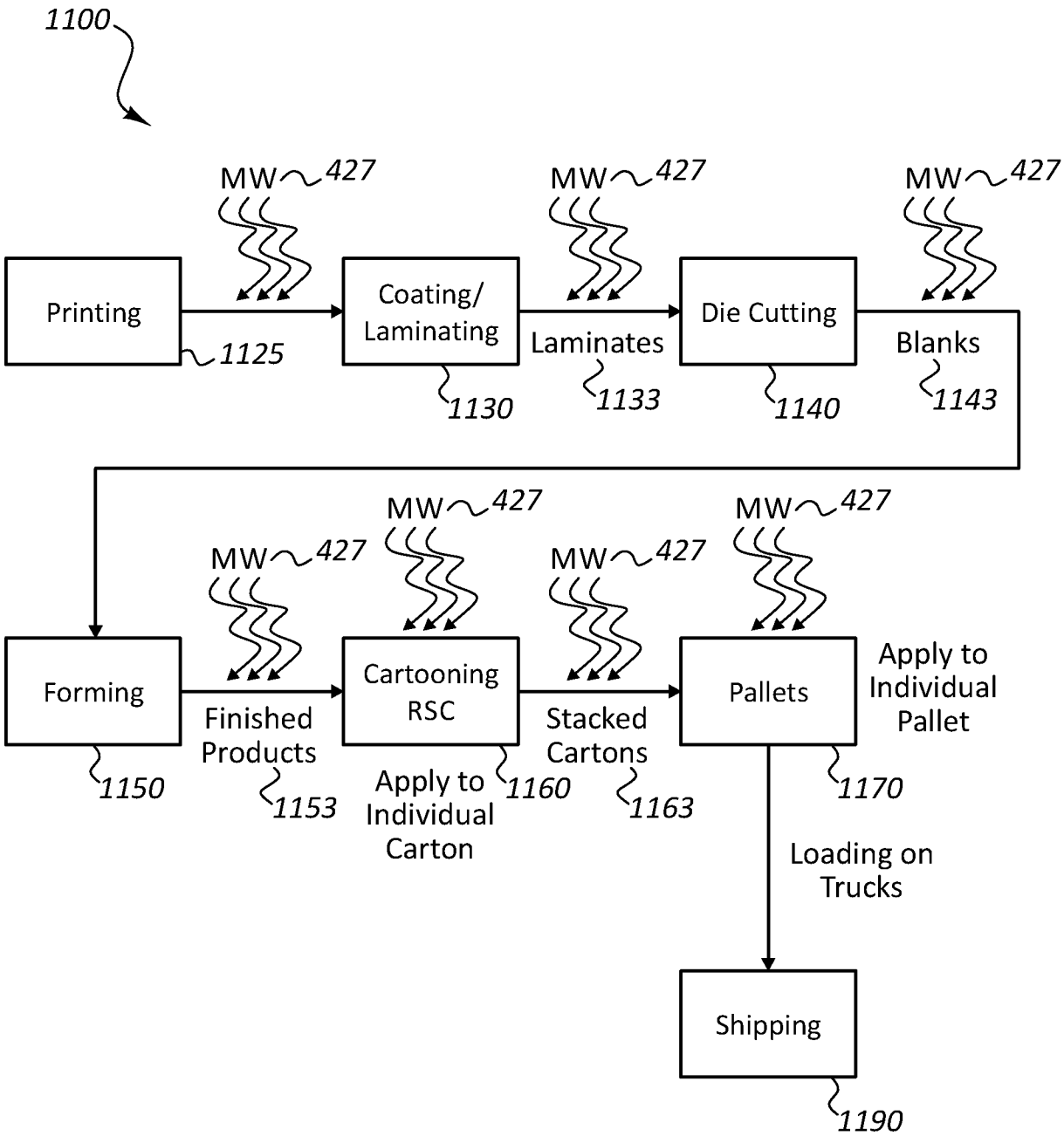
1100
MW 427
MW 427
MW 427
Printing
1125
Coating/
Laminating
1130
Laminates
1133
Die Cutting
1140
Blanks
1143
MW 427
MW 427
MW 427
MW 427
Forming
1150
Finished
Products
1153
Cartooning
RSC
Apply to
Individual
Carton
1160
Stacked
Cartons
1163
Pallets
1170
Apply to
Individual
Pallet
Loading on
Trucks
Shipping
1190

FIG. 11

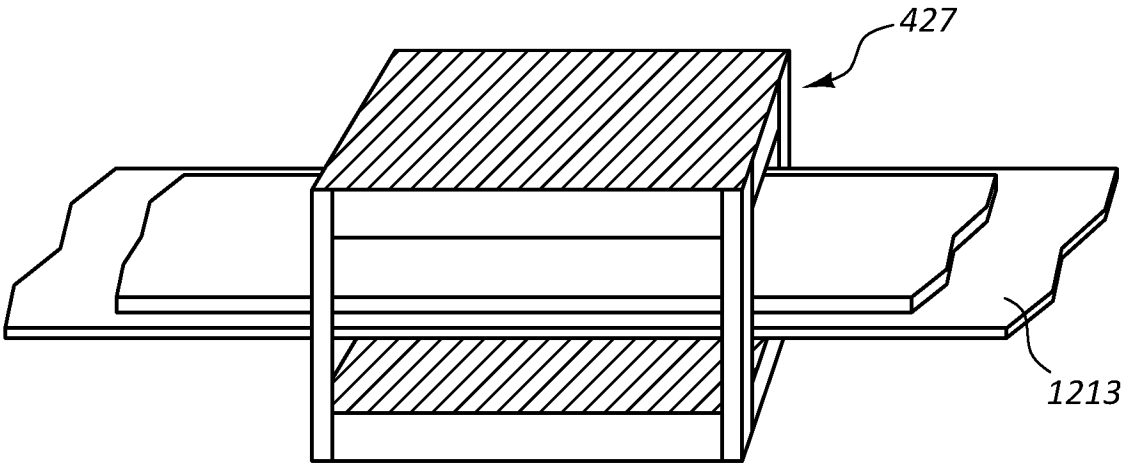


FIG. 12

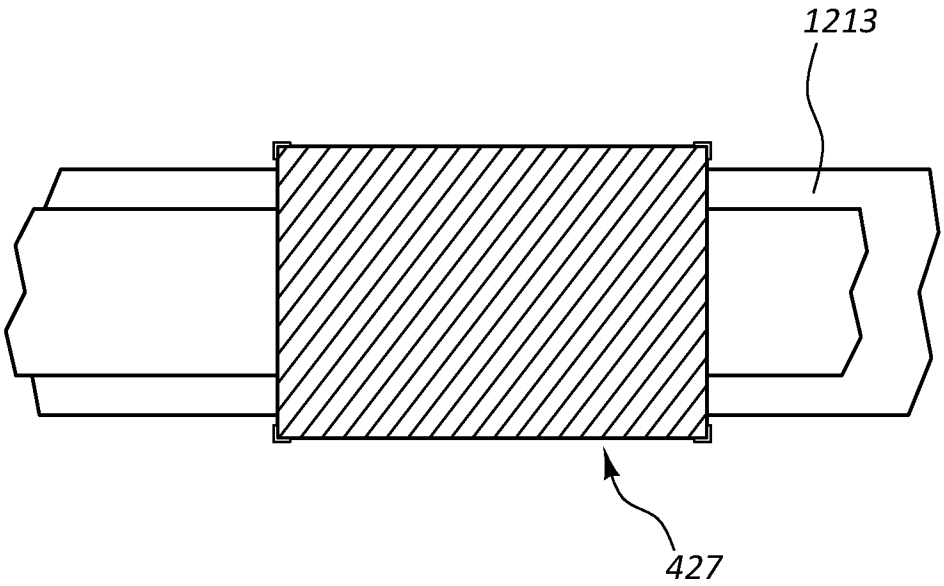


FIG. 13

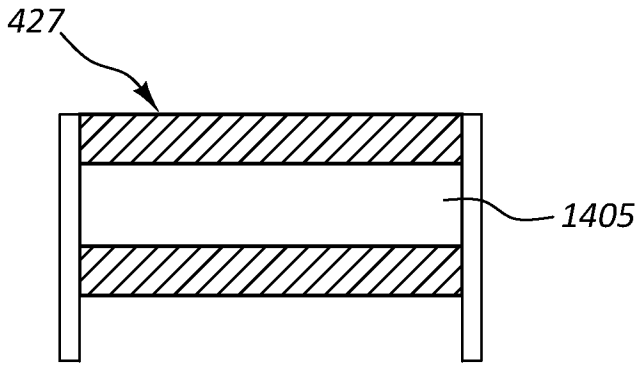


FIG. 14

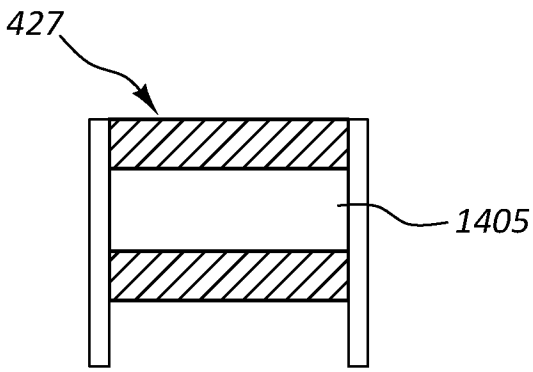


FIG. 15

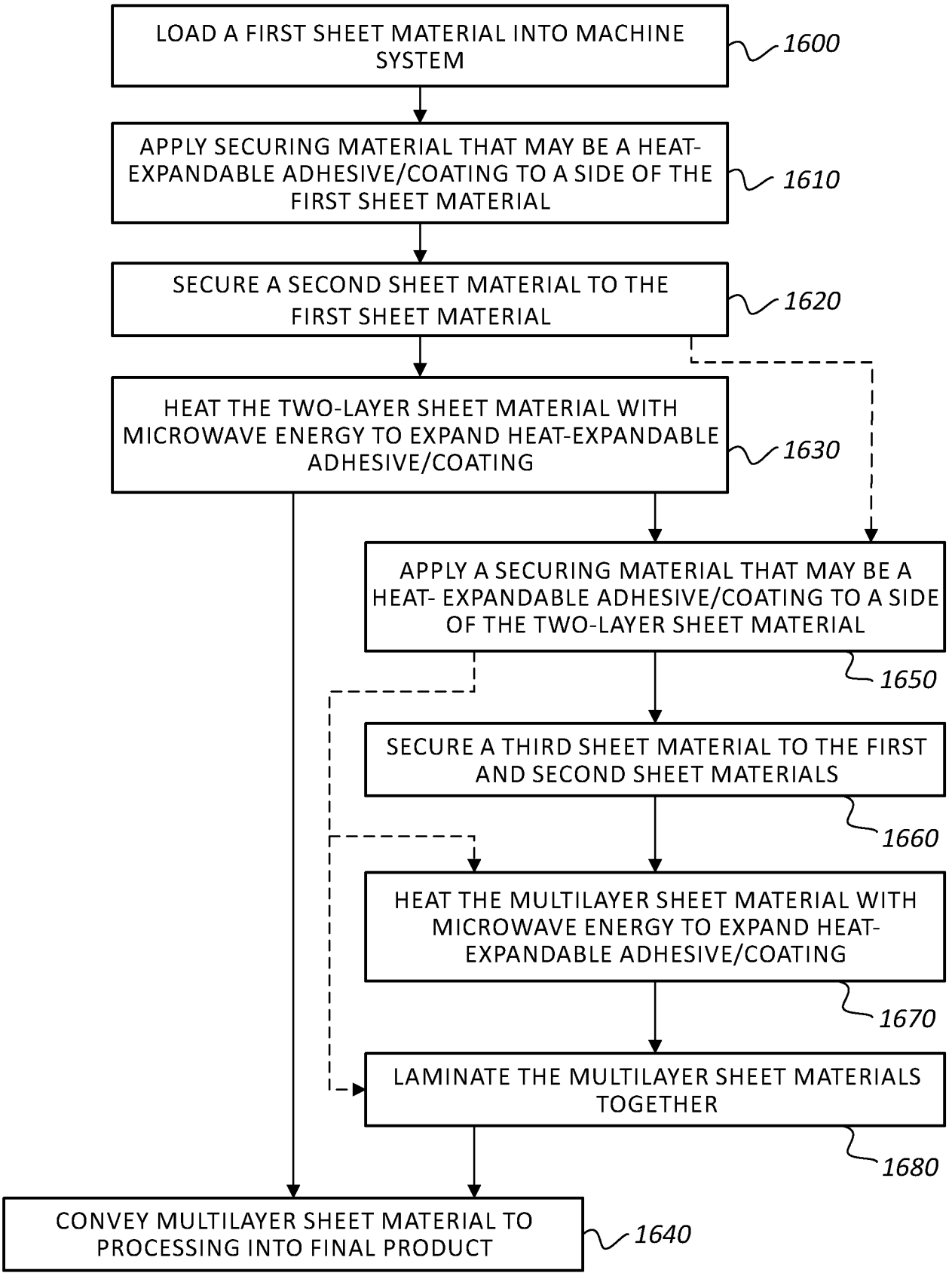
LOAD A FIRST SHEET MATERIAL INTO MACHINE SYSTEM
1600
APPLY SECURING MATERIAL THAT MAY BE A HEAT-EXPANDABLE ADHESIVE/COATING TO A SIDE OF THE FIRST SHEET MATERIAL
1610
SECURE A SECOND SHEET MATERIAL TO THE FIRST SHEET MATERIAL
1620
HEAT THE TWO-LAYER SHEET MATERIAL WITH MICROWAVE ENERGY TO EXPAND HEAT-EXPANDABLE ADHESIVE/COATING
1630
APPLY A SECURING MATERIAL THAT MAY BE A HEAT- EXPANDABLE ADHESIVE/COATING TO A SIDE OF THE TWO-LAYER SHEET MATERIAL
1650
SECURE A THIRD SHEET MATERIAL TO THE FIRST AND SECOND SHEET MATERIALS
1660
HEAT THE MULTILAYER SHEET MATERIAL WITH MICROWAVE ENERGY TO EXPAND HEAT-EXPANDABLE ADHESIVE/COATING
1670
LAMINATE THE MULTILAYER SHEET MATERIALS TOGETHER
1680
CONVEY MULTILAYER SHEET MATERIAL TO PROCESSING INTO FINAL PRODUCT
1640

FIG. 16