1 577 748

PATENT SPECIFICATION

(11) 1 577 748

(21) Application No. 49454/77 (22) Filed 28 Nov. 1977
(31) Convention Application No. 51/142273
(32) Filed 29 Nov. 1976 in
(33) Japan (JP)
(44) Complete Specification published 29 Oct. 1980
(51) INT CL³ F16F 9/32
(52) Index at acceptance
G3N 287 404 DA

(19)



(54) A METHOD OF AND A DEVICE FOR CONTROLLING A SHOCK ABSORBER

(71) We, HITACHI, LTD., of 1-5-1, Marunouchi, Chiyoda-ku, Tokyo, Japan, a body corporate organized according to the laws of Japan, do hereby declare the invention, for which we pray that a patent may be granted to us, and the method by which it is to be performed, to be particularly described in and by the following statement:—

The present invention relates to a method and device for controlling a shock absorber so as to stop moving objects having a wide range of kinetic energies.

As buffers for absorbing a shock which arises in stopping an object having inertia, the following shock absorbers have previously been employed:

(1) A shock absorber using the elasticity of a material, e.g.
(a) Metal spring shock absorber
(b) Rubber shock absorber
(c) Air spring shock absorber
(d) Fluid spring shock absorber
(2) A shock absorber using the viscosity of a fluid.
(3) A shock absorber using the dynamic pressure of a liquid, e.g.
(a) Constant pressure valve type shock absorber
(b) Fixed orifice type shock absorber
(c) Variable orifice type shock absorber
(4) A shock absorber using frictional force
(5) A shock absrober using the plastic deformation of a metal.

In any of the known types of buffers, however, the object having an inertia comes into contact with a movable part for shock absorption and then the movable part is moved, whereby a shock absorbing force develops for the first time. Therefore, in the case where the kinetic energy of the object is high, an impact stress at the contact between the object and the movable part becomes very high to adversely affect both the object and the movable part.

The known devices have no mechanism for the position control of the object, and therefore have the disadvantage that an accurate position control is impossible. Accordingly, such operations as automatically grasping the object stopped by the movable part and transferring it to another place are impossible.

It is an object of the present invention to provide a method and device for controlling a shock absorber wherein a movable part is actively controlled to make it possible to moderate an impact stress at the contact between an object and the movable part and also to accurately perform the position control of the object.

According to one aspect of the present invention, there is provided a method of controlling a shock absorber having a movable member which comes into contact with a moving object, said method including the steps of: detecting a position and a velocity of the moving object; moving said movable member in the direction of movement of the object at a velocity slightly less than the detected values; detecting a contact between the object and said movable member; decelerating said movable member upon the detection of the contact between the object and the movable member; detecting that the movement of said movable member has reached a certain predetermined value; and executing a position control at the detection of said predetermined value so as to stop said movable member at a predetermined position.

According to another aspect of the present invention there is provided a device for controlling a shock absorber having a movable member which comes into contact with a moving object, said device including: first means for detecting a position and a velocity of the moving object; second means for detecting a contact between the object and said movable member; third means for detecting a given distance travelled by said movable member; and means for controlling the movement of said movable member so as to move it in the direction of

movement of the object at a velocity slightly less than the detected values of position and velocity of said moving object, to decelerate said movable member upon the detection of contact between the object and the movable member, and to stop said movable member at a command position when the distance travelled by said movable object has exceeded a predetermined value.

The present invention will now be described in greater detail by way of example, with reference to the accompanying drawings, wherein:—

Fig. 1 is a diagrammatic view of one preferred form of a device for controlling a shock absorber;

Fig. 2 is a block diagram of the counter device shown in Fig. 1;

Fig. 3 is a block diagram of the control device shown in Fig. 1;

Fig. 4 is a flow chart showing the operating sequence of various components of the shock absorber shown in Fig. 1;

Fig. 5 is a block diagram of the timer shown in Fig. 3;

Fig. 6 is a block diagram of the analog circuit shown in Fig. 3;

Fig. 7 is a waveform diagram for explaining the operation of the circuit shown in Fig. 6;

Fig. 8 is a block diagram of the pattern generator circuit shown in Fig. 6;

Fig. 9 is a block diagram of the digital computer shown in Fig. 3; and

Figs. 10 to 12 are perspective views each showing the schematic construction of alternative forms of devices for controlling a shock absorber.

Referring first to Fig. 1, the device for controlling a shock absorber comprises a detecting device 2, a movement mechanism 3, a control device 4, and an oil pressure source 5. An object 1 to be stopped by the shock absorber has inertia and is moving in the direction of arrow. The detecting device 2 comprises sensors 21 and 22 and a counter device 23, and it is arranged at a position of a predetermined distance from the movement mechanism 3 to be described later. The two sensors 21 and 22 whose spacing is set at a fixed distance in advance detect the passages of the object 1 and generate signals, and simultaneously, the counter device 23 measures the period of time required for the object 1 to pass through the interspace between the sensors 21 and 22, whereby the detecting device 2 detects the velocity of the object 1. The detecting device 2 provides output signals on lines 101 and 102 these signals representing the time of passage of the object 1 through the sensor 21 and the period of time taken by the passage of the object through the interspace between the sensors 21 and 22, respectively.

The movement mechanism 3 consists of a piston 32, a head 31 mounted on the extreme end of the piston and serving to catch the object 1, a detector 36 for detecting the contact between the object 1 and the head 31, an oil hydraulic cylinder 33, a control valve 34 for controlling the movement of the piston 32, and a displacement meter 35 for detecting the displacement value of the piston 32. The movement mechanism 3 is supplied with pressurized oil from the oil pressure source 5. The control device decodes and processes the signals fed from the respective detectors and the detecting device and feeds a command signal 108 to the control valve 34. Signals 103 and 104 are respectively obtained from the detector 36 and the displacement meter 35.

Fig. 2 shows the counter device 23 in greater detail. The counter device 23 includes a clock generator 231, a counter 232, a flip-flop 233, and an AND gate 234.

With such an arrangement, when the object 1 passes through the sensor 21, the detection signal on the line 101 is transmitted to the control device 4. It is also supplied to the counter 232, so that the counter 232 begins to count clock pulses from the clock generator 231. Subsequently, when the object 1 passes through the sensor 22, the operation of the counter 232 is stopped by the detection signal 109. Simultaneously therewith, the flip-flop 233 is set, the AND gate 234 is enabled by the output signal on an output line 110, and the count of the counter 232 at that time is delivered as a velocity signal on the line 102. The counter 232 and the flip-flop 233 are reset by a reset signal on lines 111.

Fig. 3 shows the control device 4 in greater detail. The control device consists of a digital computer 41, an analog circuit 42, and a timer 43. The input signals to the digital computer 41 are the velocity signal on the line 102 from the detecting device 2 in Fig. 1, the contact signal on a line 103 from the detector 36, the displacement signal on a line 104 from the displacement meter 35, and a start signal on a line 105 from the timer 43. The output signals from the digital computer 41 are a timing signal on a line 106 and a parameter signal on a line 107, which are respectively input into the timer 43 and the analog circuit 42.

The input signals to the analog circuit 42 are the displacement signal on the line 104 from the displacement meter 35 and the parameter signal on the line 107 from the digital computer 41, whilst the output signal on a line 108 is the command signal which is input into the control valve 34. The timer 43 starts by receiving the sensor transit signal on the line 101 from the detecting device 2. Upon the establishment of coincidence with

the value of the timing signal on the line 106, the timer 43 stops and puts the start signal into the digital computer 41 by means of the line 105.

Fig. 4 shows the operating sequence of the detecting device 2, the control device 4 and the movement mechanism 3. The operating sequence is as follows:—

(1) When the object 1 passes through the sensor 21, the counter device 23 starts operating, and simultaneously inputs the object transit signal on the line 101 into the timer 43, so that the timer starts.

(2) When the object 1 passes through the sensor 22, the operation of the counter 23 stops, and the period of time from the start to the stop of the operation of the counter 23 is input into the digital computer 41 by means of the line 102 as the velocity signal.

(3) Since the distance between the sensors 21 and 22 and the distance between the sensor 21 and the initial position of the head 31 are known, the digital computer 41 computes from these values, an external force to govern the movement of the object 1 and the velocity signal 102 the period of time in which the object 1 passes through the sensor 21 and arrives at a position of a fixed distance from the head 31. The digital computer 41 outputs the result into the timer 43 by means of the line 106 as the timing signal. The "external force to govern the movement of the object" signifies the gravitational acceleration, a resistance force, etc. Since these values are determined from the shape and moving direction of the object 1, etc., they are experimentally obtained beforehand.

(4) The digital computer 41 computes several parameter signals from the velocity signal on the line 102, and inputs them into the analog circuit 42 by means of the lines 107.

(5) When the start signal from the timer 43 is input into the digital computer 41 by means of the line 105, the digital computer 41 enters an operation start signal into the analog circuit 42 through a line 107 as one of the parameter signals.

(6) The analog circuit 42 starts operations by the operation start signal, generates a velocity pattern of fixed velocity set by some of the parameter signals and delivers the command signal to the control valve 34 by means of the line 108 as a velocity command value for the movement mechanism 3. As a result of this command signal, the piston 32 is started and accelerated in the same moving direction as that of the object 1 and reaches a velocity slightly less than that of the object 1 immediately before the object 1 collides against the head 31.

(7) When the object 1 comes into contact with the detector 36, the contact signal 103 is transmitted from the detector 36 on the line 103 and is input into the digital computer 41. The digital computer 41 puts a deceleration start signal into the analog circuit 42 as one of the parameter signals.

(8) Upon receipt of the deceleration start signal, the analog circuit 42 generates a deceleration pattern set by one of the parameter signals on the lines 107. The analog circuit 42 delivers the command signal on the line 108 as a velocity command value for the movement mechanism 3. As a result of this signal, the piston 32 is decelerated.

(9) In the case where the object 1 and the head 31 do not come into contact after the piston 32 has travelled a certain distance from the commencement of its movement, the digital computer 41 monitors and judges the value of the displacement signal on the line 104 and thereby adjusts some of the parameter signals on the line 107, so that the value of the velocity command reduces to thereby reduce the velocity of the piston 32.

(10) When the piston 32 reaches a certain distance from a predetermined command position, the digital computer 41 monitors and judges the value of the displacement signal on the line 104, to thereby change-over the control system from a velocity control system to a position control system through the parameter signals on the lines 107 and to make the position control to the command position.

(11) After the lapse of a certain time when the piston 32 has been stopped the digital computer 41 resets all the devices and returns them to their initial states.

Fig. 5 shows the timer 43 shown in Fig. 3 in greater detail. The timer 43 includes a clock generator 431, a counter 432 and a comparator 433.

The counter 432 counts the clock pulses from the clock generator 431 upon receipt of the transit signal on the line 101 from the counter device 23, and the comparator 433 compares the value of the count with the timing signal on the line 106 from the computer 41. When both the values coincide, the coincidence signal is input into the computer 41 by means of the line 105 as the start signal and it stops the counter 432. The counter 432 is reset by the reset signal on the line 111.

Fig. 6 shows the analog circuit 42 shown in Fig. 3 in greater detail. A pattern generator 421 generates a preset signal pattern with the parameter signals on lines 107—1 to 107—3 from the digital computer 41 and the displacement signal on the line 104 from the displacement meter 35. The output from the pattern generator 421 appearing on line 112 is integrated by an integrator 422. The output from the integrator 422 appearing on the line 113 is

subtracted from the initial value on the line 107—4 by a subtractor 423 and becomes a velocity command signal on a line 114.

The digital computer 41 delivers the position command signal on the line 107—5 as one of the parameter signals. By manipulating a change-over switch 424, the velocity command signal on the line 114 or the position command signal on the line 107—5 is input by means of a line 115 to a control valve driving circuit 426 through a subtractor 425. An output signal appearing on a line 116 from the control valve driving circuit 426 is input into the control valve 34 of the movement mechanism 3. The control signals on the lines 107—6 and 107—7 for resetting and holding the integrator 422, the control signal on the line 107—8 for the change-over switch 424, and the control signal on the line 107—9 for a switch 427 are indicated collectively on the line 107 in Fig. 3 as the parameter signals. The operation of the various parts will now be explained in greater detail with reference to Fig. 7.

Referring to the graphs shown in Fig. 7, the first waveform (a) illustrates the position command signal on the line 107—5. A waveform (b) shown in solid lines indicates the velocity command signal on the line 114, and a waveform shown in broken lines will be described later. Waveform (c) illustrates the output of the pattern generator 421 on the line 112. Waveform (d) illustrates the displacement signal on the line 104 from the displacement meter 35 which represents the displacement of the piston 32. As shown in Fig. 7, the states before a time t_1 are the initial states, in which the switch 427 is closed, the switch 424 is connected on the side of a contact *b*, and the movement mechanism 3 has its position controlled by the position command signal on the line 107—5.

First of all, the input signals on the lines 107—1 to 107—3 of the pattern generator 421 are set by the digital computer 41 as will be stated later. At the time t_1, the digital computer 41 transmits the control signals on the lines 107—8 and 107—9 as the operation start signals, to connect the change-over switch 424 onto the side of a contact *a* and to open the switch 427. Thus, the velocity command signal 114 is entered into the control valve driving circuit 426, and the feedback of the signal 104 from the displacement meter 35 is cut off, whereby the movement mechanism 3 is brought into the velocity control system. In this case, the velocity of the piston 32 is determined by the initial velocity value signal on the line 107—4.

At a time t_2, the contact between the object 1 and the head 31 is detected, and the deceleration start signal is entered from the digital computer 41 into the analog circuit 42 as stated previously. Upon receipt of the output signal on the line 107—7, the integrator 422 starts the integration. The integral value is subtracted from the initial velocity value signal on the line 107—4 (that is, the initial value A of the signal on the line 114 illustrated in waveform part (b) of Fig. 7) as the output signal on the line 113 indicated in broken lines in waveform (b), and the result is entered into the control valve driving circuit 426 as the velocity command signal on the line 114 indicated in a solid line. Subsequently, at a time t_3 before a time t_4, the position command signal on the line 107—5 indicated by waveform (a) is set to the value of the final control position again.

When, at the time t_4, it is detected that the piston 32 has come to the fixed distance from the command position, the change-over switch 424 is connected onto the side of the contact *b*, and the switch 427 is closed. Then, the movement mechanism 3 is changed-over from the velocity control system to the position control system and has its position controlled to the command position in the period of time from the time t_4 to a time t_5.

Fig. 8 shows the pattern generator 421 shown in Fig. 6 in greater details. Amplifiers 301—304 are for controlling gains, components 305—309 are function operating elements, and components 310 and 311 are subtractors. Input on the line 107—1 is a signal x_t representative of the position at which the change-over from the velocity control system to the position control system is done. Input on the line 107—2 is a signal x_{mid} representative of the position at which the deceleration is started. Input on the line 107—3 is an initial velocity value signal $\dot{x}_1$, which is the same as the signal on the line 107—4. Input on the line 104 is a displacement signal x. In the pattern generator shown in Fig. 8, the following operations are executed:

$$\ddot{x}=\sqrt{12\alpha|x-x_t|}$$

$$\alpha=\dot{x}_1{}^4/(x_{mid}-x_t)^3$$

By the operation, the following pattern is generated:

$$\ddot{x}=\ddot{x}_{max}-\beta(t-t_2)$$

where β is a variable.

Here, $\ddot{x}$ is the signal 112, which is integrated by the integrator 422 into the velocity signal.

Fig. 9 shows the digital computer 41 shown in Fig. 3 in greater detail.

The computer 41 includes computing circuits 441—443, a digital-to-analog

converter 444, comparators 445—448, flip-flops 449—454, a signal generator 455, a timer 456, a holding circuit 457, a switch 458, AND gates 459 and 460, an inverter 461, and an OR gate 462.

The velocity signal on the line 102, i.e., the period of time C_v required for the object 1 to pass through the interspace between the sensors 21 and 22 (corresponding to the number of pulses from the clock generator 231 as are generated during the period of time) is transmitted from the counter device 23 to the computing circuit 443. Herein, the following period of time C_T is evaluated on the basis of the distance L_1 between the sensors 21 and 22, the distance L_2 between the sensor 21 and the head 31 of the piston, the gravitational acceleration α, the clock pulse cycle t_c of the clock generator 231 and the delay time C_d of the movement mechanism 3, all of which are known or set previously:

$$C_T=\phi C_v \pm (C_v/\rho)^2 - C_d$$

where $\rho=1/\sqrt{\phi\psi}$

$$\phi=L_2/L_1$$

$$\psi=\frac{\alpha L_2}{2L_1^2}t_c^2$$

This period of time C_T is fed to the timer 43 as the timing signal on the line 106.

The signal on the line 102 is fed to the computing circuit 441. The velocity V_l which is obtained therein by multiplying the inverse number of the input C_v by a predetermined coefficient C_o as given below is fed to the analog circuit 42 on the lines 107—3 and 107—4 as the initial velocity signals through the computing circuit 442 and the digital-to-analog converter 444 to be described later.

$$V_l=C_o/C_v$$

Subsequently, when the start signal on the line 105 is input from the timer 43, the flip-flop 451 is set, the signals on the lines 107—8 and 107—9 are fed to the analog circuit 42, the change-over to the velocity control system is done, and the piston 32 is moved at the fixed velocity by the initial value velocity signal on the line 107—4. When the object 1 comes into contact with the piston 32 and the detection signal 103 is input, the AND gate 459 is enabled, the flip-flop 450 is set, and the AND gate 460 is brought into the "on" state. Simultaneously therewith, the flip-flop 453 is set through the OR gate 462, the signal on the line 107—7 is input into the analog circuit 42, the integrator 422 is rendered operative, and the piston 32 is decelerated.

When the object 1 and the head 31 of the piston 32 do not contact even after the piston 32 has started the movement and has been displaced a given distance x_A, the output of the comparator 445 sets the flip-flop 449 to drive the signal generator 455 through the AND gate 460. A signal which increases stepwise with the lapse of time is generated in the signal generator, and is input to the computing circuit 442. In the computing circuit 442, the signal of the signal generator 455 is subtracted from the velocity signal from the computing circuit 441. The resultant signal is input to the analog circuit 42 through the digital-to-analog converter 444 on the line 107—4 as a signal to decrease the velocity command value.

On the other hand, when the object 1 does not contact with the head 31 of the piston even after the piston 32 has been displaced a given distance x_2, the flip-flop 453 is set by the output of the comparator 447, and the deceleration start signal is transmitted on the line 107—7. As a result, the displacement signal on the line 104 from the displacement meter 35 is held in the holding circuit 457, and is input to the analog circuit 42 on the line 107—2.

Subsequently, when the piston 32 is displaced a given distance x_3, the output of the comparator 448 is generated, the flip-flop 454 is set, the switch 458 is changed-over from position *a* to position *b* side, and the velocity command signal 107—5 is changed-over from the initial position signal x_0 to a command position signal x_5.

When the piston 32 reaches a position x_4 lying a fixed distance on this side of the command position, the output of the comparator 446 is generated, and the flip-flop 452 is reset, and the signals on the lines 107—8 and 107—9 are inverted, so that the velocity control system is changed-over to the position control system. Upon the expiry of a fixed time after the flip-flop has been set, the reset signal is provided from the timer 456 on the line 107—6. This signal is fed to the analog circuit 42, and is also used for resetting the flip-flops 449, 450 and 452—454 within the computer 41. Furthermore, it is used to reset the counters and flip-flops of the counter device 23 and the timer 43 described earlier.

Using the control device set forth above, a smooth velocity control and an accurate position control become possible.

Referring now to the first of the alternative forms of a device for controlling a shock absorber shown in Fig. 10, the position and velocity of an object 1 moving on a flat surface 81 are detected by a two-dimensional displacement and velocity

detecting device 82 such as television camera, the object being stopped without any impact. A movement mechanism 83 is the same as the movement mechanism 3 shown in Fig. 1, except that it has its position in the lateral direction controlled by a position control device 85. In addition to the functions of the control device 4 shown in Fig. 1, a control device 84 has the function of computing the path of the object 1 on the basis of the position and velocity signals input there into from the two-dimensional displacement and velocity detecting device 82 and then inputs a command value into the position control device 85. In this embodiment, the invention is expanded to two dimensions. The computation of the path of the object 1 can be carried out with a digital computer.

Referring next to the second alternative form of a device for controlling a shock absorber shown in Fig. 11, the position and velocity of an object 1 moving on a flat surface 91 are detected by a detecting device 92 which is based on the same principle as that of the detecting device 2 in Fig. 1, the object being stopped without any inpact. A movement mechanism 93 is the same as the movement mechanism 3 shown in Fig. 1, except that it has its position in the longitudinal direction controlled by a position control device 95. In addition, the moving direction of the movement mechanism 93 is converted through a linkage 96 so as to drive a grasping device 97 which corresponds to the head 31 in Fig. 1. In addition to the functions of the control device 4 shown in Fig. 1, a control device 94 has the function of computing the position of contact between the object 1 and the grasping device 97 from the velocity signal of the object 1 entered from the detecting device 92 and then inputting a command signal into the position control device 95. Also in this embodiment, the invention is expanded to two dimensions as in the previous embodiment of Fig. 10. The computation of the path of the object 1 can be executed with a digital computer.

Referring lastly to the third alternative form of a device for controlling a shock absorber shown in Fig. 12 the position and velocity of an object 1 moving in mid-air are detected by two, two-dimensional displacement and velocity detecting devices 72 and wherein the object is grasped and stopped by a grasping device 76 without any impact. A movement mechanism 73 is the same as the movement mechanism 3 shown in Fig. 1, except that it has its position and direction controlled by a position control device 75 having four degrees of freedom. In addition to the functions of the control device 4 shown in Fig. 1, a control device 74 has the function of computing the path of the object 1 from the position and velocity signals input thereinto from the two, two-dimensional displacement and velocity detecting devices 72 and then inputting a command signal into the position control device 75. In this embodiment, the invention is expanded to three dimensions. The computation of the path of the object 1 can be performed with a digital computer.

As described above in detail, according to this invention, the position and velocity of an object are detected, and the velocity of a piston is controlled in correspondence with the values, whereby the adjustment of a shock absorbing force and the position control can be conducted. The effect is very great in enhancing the function of a shock absorber.

The "shock absorber" used in this specification is not restricted to the conventional shock absorber, such as a buffer, but the term is intended to cover any device for receiving and stopping a moving object with reduced shock.

WHAT WE CLAIM IS:—

1. A method of controlling a shock absorber having a movable member which comes into contact with a moving object, said method including the steps of: detecting a position and a velocity of the moving object; moving said movable member in the direction of movement of the object at a velocity slightly less than the detected values; detecting a contact between the object and said movable member; decelerating said movable member upon the detection of the contact between the object and the movable member; detecting that the movement of said movable member has reached a certain predetermined value; and executing a position control at the detection of said predetermined value so as to stop said movable member at a predetermined position.

2. The method for controlling a shock absorber according to claim 1, including additional steps of detecting that said movable member has not made contact with the object even after the movable member has exceeded a first given distance; and decelerating said movable member upon the detection that no contact has taken place in said given distance.

3. The method for controlling a shock absorber according to claim 1 or 2, wherein said movable member is a piston.

4. The method for controlling a shock absorber according to any one of the preceding claims, wherein said shock absorber consists of oil hydraulic means for moving said movable member, and valve means for controlling said oil hydraulic means.

5. The method for controlling a shock absorber according to claim 1, additionally including the steps of: computing a predetermined period of time in correspondence with the detected values of position and velocity of said object; and moving said movable member after the expiry of said period of time.

6. The method for controlling a shock absorber according to claim 1, additionally including the steps of: detecting that said movable member has moved by a given distance; setting a command position of said movable member upon the detection of said given distance travelled by the movable member; and stopping said movable member at the set command position when the predetermined value of the movement of the movable member has been reached.

7. A device for controlling a shock absorber having a movable member which comes into contact with a moving object, said device including: first means for detecting a position and a velocity of the moving object; second means for detecting a contact between the object and said movable member; third means for detecting a given distance travelled by said movable member; and means for controlling the movement of said movable member so as to move it in the direction of movement of the object at a velocity slightly less than the detected values of position and velocity of said moving object, to decelerate said movable member upon the detection of contact between the object and the movable member, and to stop said movable member at a command position when the distance travelled by said movable object has exceeded a predetermined value.

8. A device for controlling a shock absorber according to claim 7, wherein said means for controlling the movement of said movable member includes a digital computation means receiving signals from said first to third detecting means and for generating a timing signal and parameter signals as predetermined, timer means for generating a start signal upon the expiry of a period of time corresponding to said timing signal, and analog circuit means for generating signals for controlling the movement of said movable member, on the basis of a signal from said given distance travelled detecting means and said parameter signals from said digital computation means.

9. A device for controlling a shock absorber according to claim 7 or 8, wherein said movable member is controlled to move in two dimensions.

10. A device for controlling a shock absorber according to claim 7 or 8, wherein said movable member is controlled to move in three dimensions.

11. A device for controlling a shock absorber, constructed and arranged to operate substantially as herein described with reference to and as illustrated in Figs. 1 to 9, or Fig. 10, or Fig. 11, or Fig. 12 of the accompanying drawings.

MEWBURN ELLIS & CO.,
Chartered Patent Agents,
70—72, Chancery Lane,
London, WC2A, 1AD.
Agents for the Applicants.

Printed for Her Majesty's Stationery Office, by the Courier Press, Leamington Spa, 1980
Published by The Patent Office, 25 Southampton Buildings, London, WC2A 1AY, from which copies may be obtained.

FIG. 1

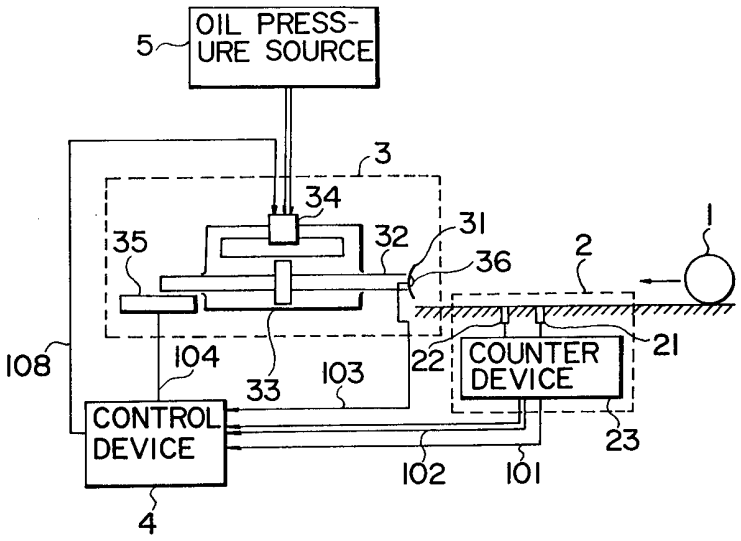
OIL PRESS-
URE SOURCE
5
3
34
35
32
31
36
2
1
108
104
33
103
22
COUNTER
DEVICE
21
CONTROL
DEVICE
23
102
101
4

FIG. 3

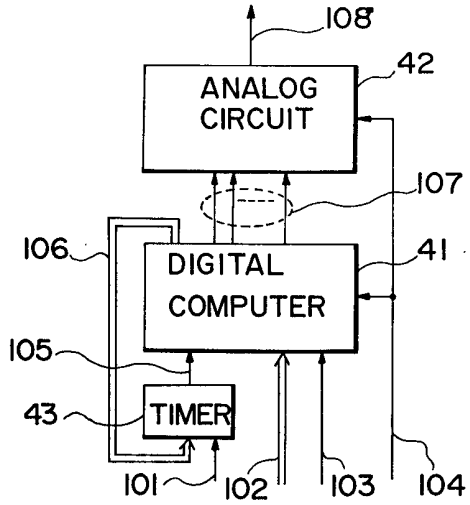
108
ANALOG
CIRCUIT
42
107
106
DIGITAL
COMPUTER
41
105
43
TIMER
101
102
103
104

FIG. 2

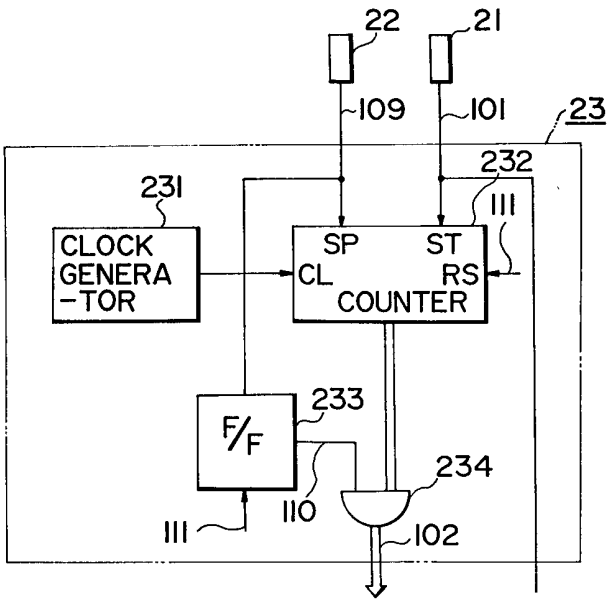
22
21
109
101
23
232
231
111
CLOCK GENERA -TOR
SP
ST
CL
RS
COUNTER
233
F/F
234
110
111
102

FIG. 5

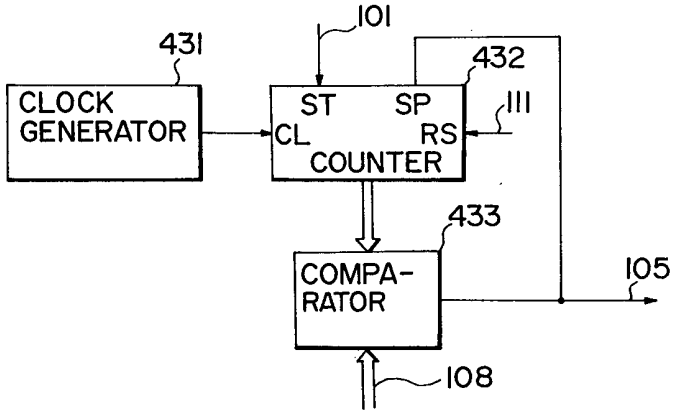
101
431
432
CLOCK GENERATOR
ST
SP
111
CL
RS
COUNTER
433
COMPA- RATOR
105
108

FIG. 4

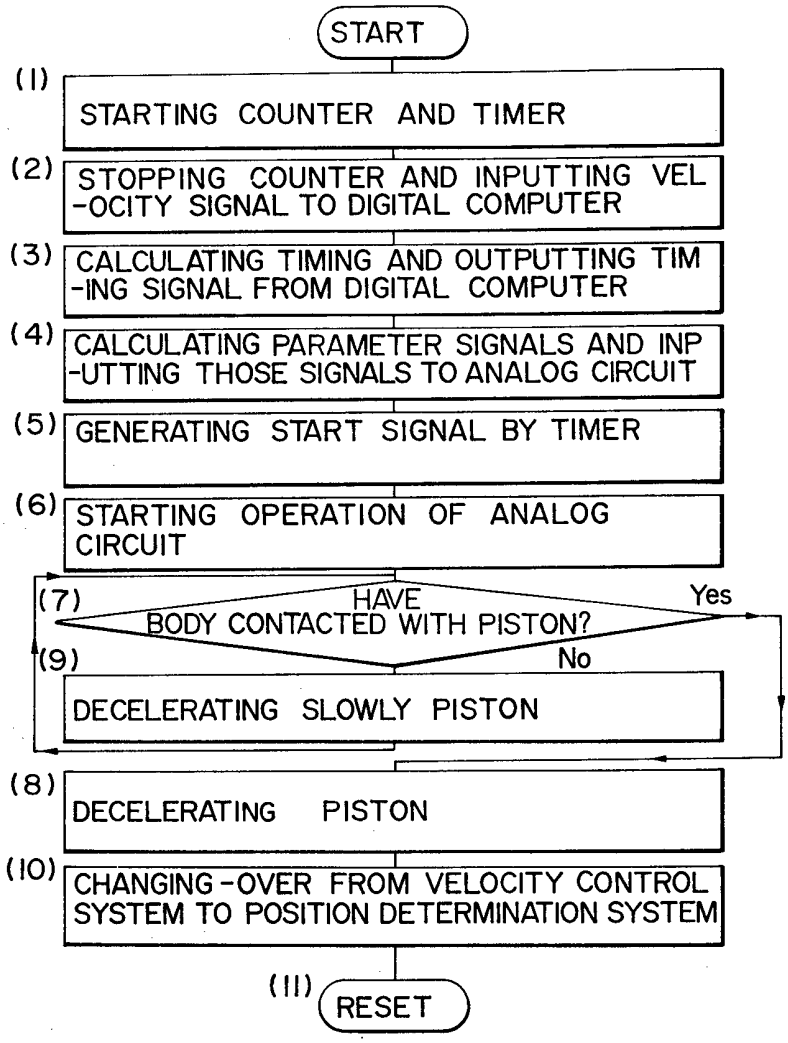
START
(1)
STARTING COUNTER AND TIMER
(2)
STOPPING COUNTER AND INPUTTING VEL -OCITY SIGNAL TO DIGITAL COMPUTER
(3)
CALCULATING TIMING AND OUTPUTTING TIM -ING SIGNAL FROM DIGITAL COMPUTER
(4)
CALCULATING PARAMETER SIGNALS AND INP -UTTING THOSE SIGNALS TO ANALOG CIRCUIT
(5)
GENERATING START SIGNAL BY TIMER
(6)
STARTING OPERATION OF ANALOG CIRCUIT
(7)
HAVE BODY CONTACTED WITH PISTON?
Yes
No
(9)
DECELERATING SLOWLY PISTON
(8)
DECELERATING PISTON
(10)
CHANGING-OVER FROM VELOCITY CONTROL SYSTEM TO POSITION DETERMINATION SYSTEM
(11)
RESET

FIG. 6

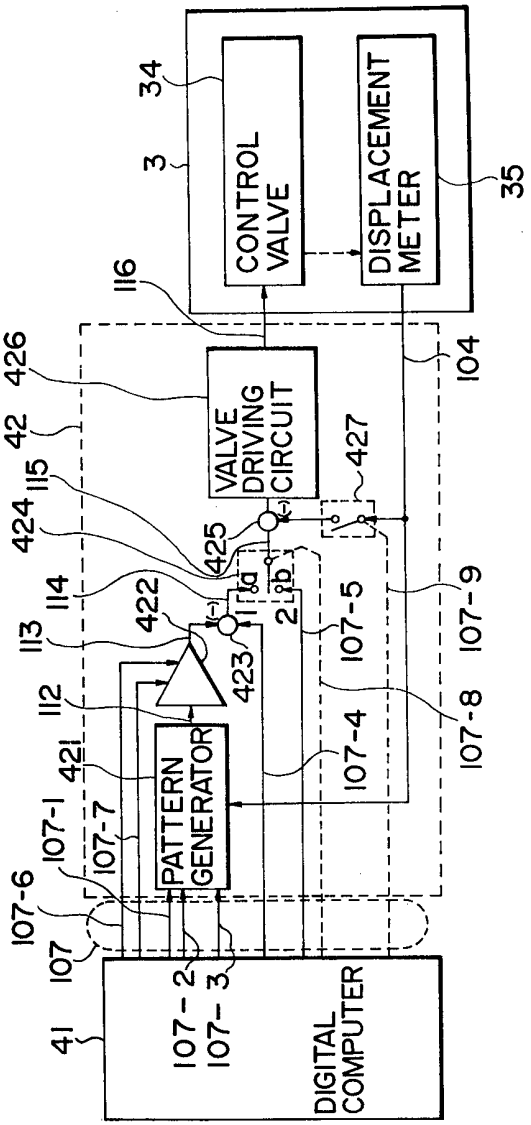
CONTROL VALVE
DISPLACEMENT METER
VALVE DRIVING CIRCUIT
PATTERN GENERATOR
DIGITAL COMPUTER
34
3
35
116
104
426
42
427
115
424
425
114
422
113
423
112
421
107-1
107-7
107-6
107
107-2
107-3
41
107-5
107-9
107-4
107-8
1a
1b
2
3

FIG. 7

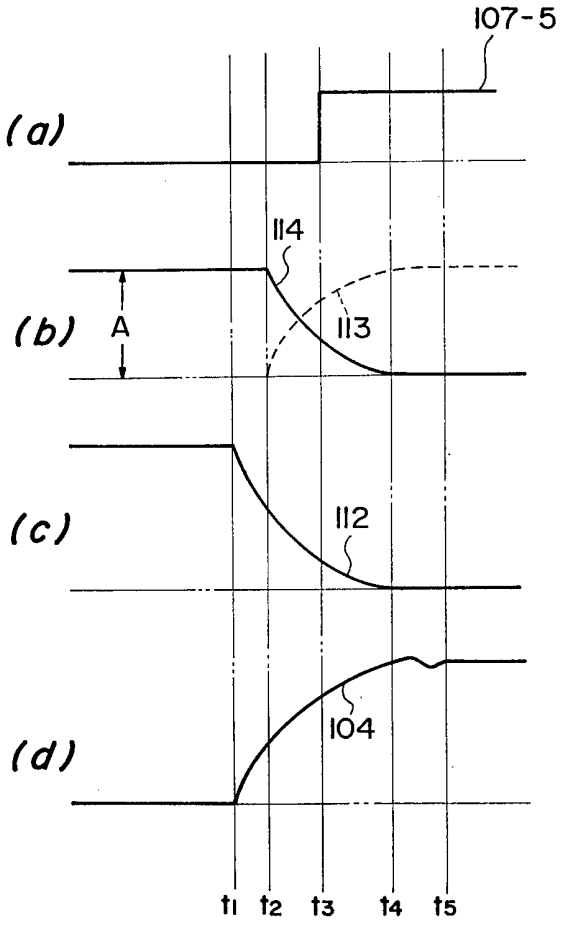

FIG. 8

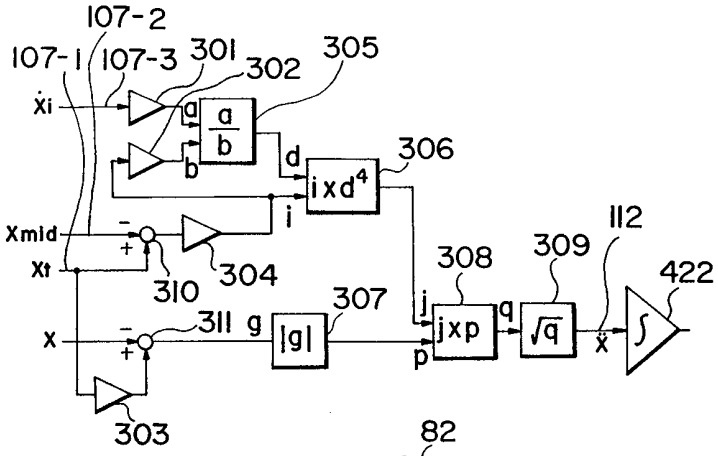
107-2
107-1
107-3
301
302
305
ẋi
a
b
a/b
d
306
ixd⁴
i
Xmid
Xt
310
304
308
309
112
422
307
j
q
jxp
√q
ẍ
∫
x
311
g
|g|
p
303

FIG. 10

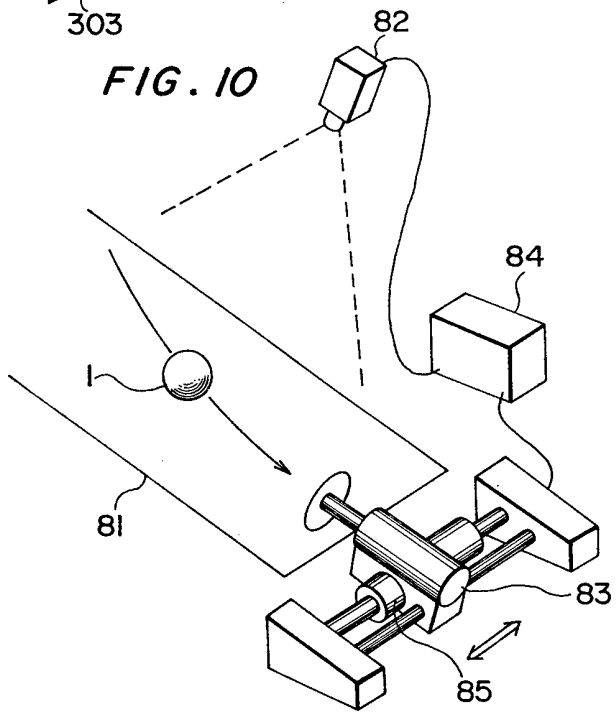
82
84
1
81
83
85

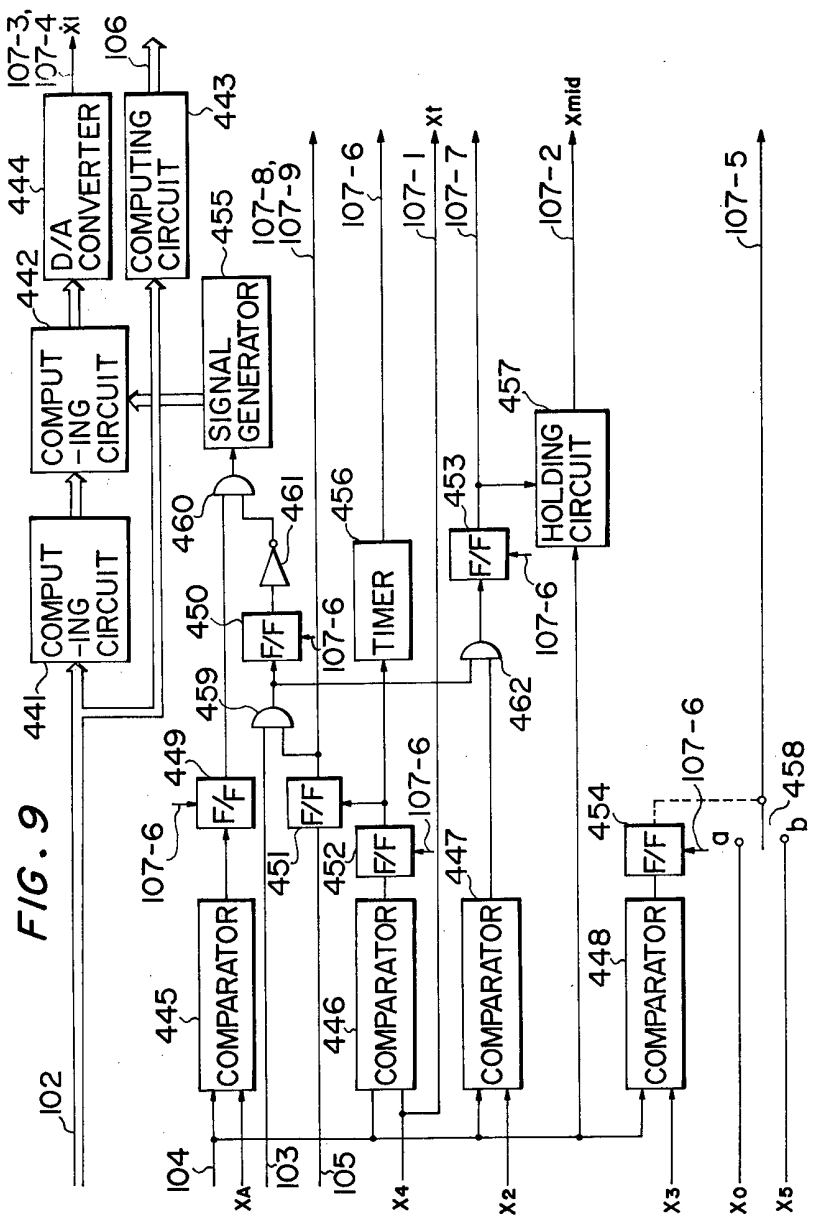
441
COMPUT -ING CIRCUIT
442
COMPUT -ING CIRCUIT
444
D/A CONVERTER
443
COMPUTING CIRCUIT
106
107-3, 107-4
X1
455
SIGNAL GENERATOR
107-8, 107-9
107-6
107-1
107-7
107-2
Xmid
107-5
Xt
460
461
456
TIMER
453
F/F
457
HOLDING CIRCUIT
450
F/F
107-6
459
462
449
F/F
107-6
451
F/F
452
F/F
107-6
447
454
F/F
107-6
a
b
458
445
COMPARATOR
446
COMPARATOR
COMPARATOR
448
COMPARATOR
102
104
103
105
X4
X2
X3
X0
X5
XA

FIG. 9

FIG. 11

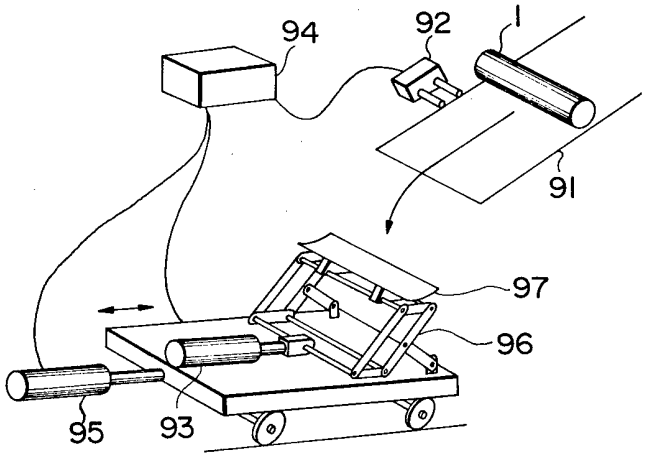

FIG. 12

