Nov. 22, 1927.

1,650,118

B. F. FITCH

LOAD LIFTING DEVICE

Filed Sept. 30, 1924

3 Sheets-Sheet 1

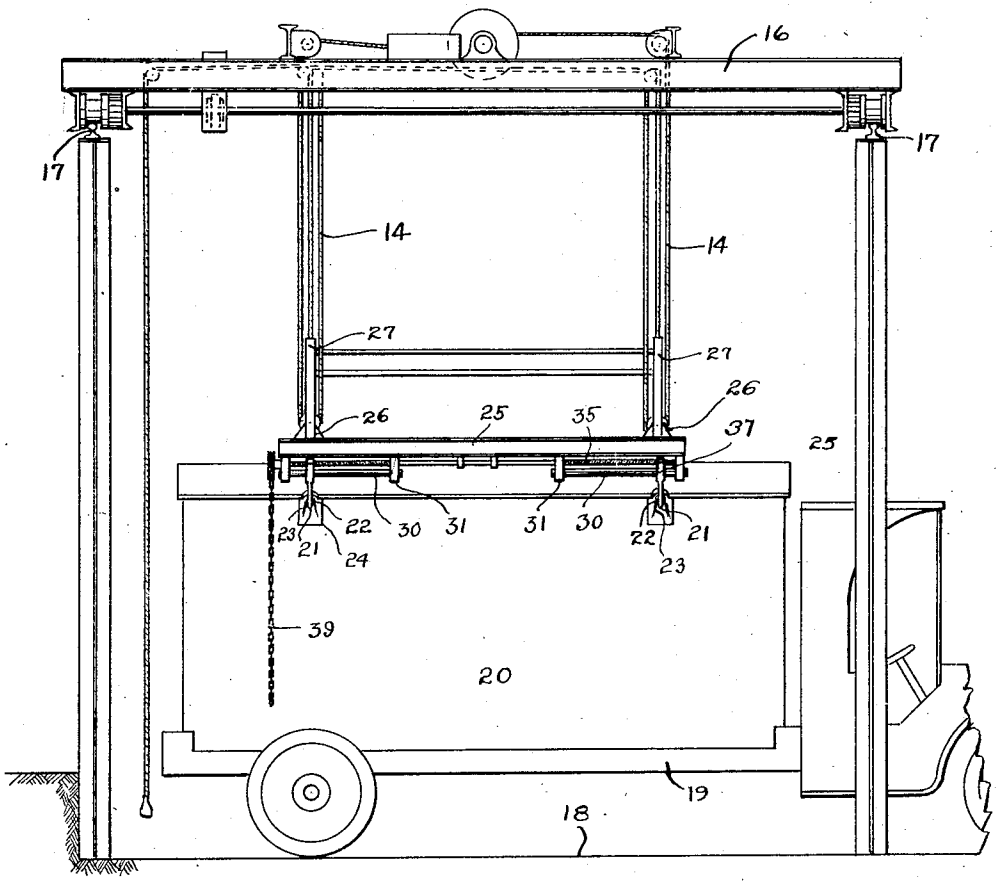

FIG.-1

Inventor

Benjamin F. Fitch

By Bair, Macklin, Goepel & Fearn

Attorneys

Nov. 22, 1927. 1,650,118

B. F. FITCH

LOAD LIFTING DEVICE

Filed Sept. 30, 1924 3 Sheets-Sheet 2

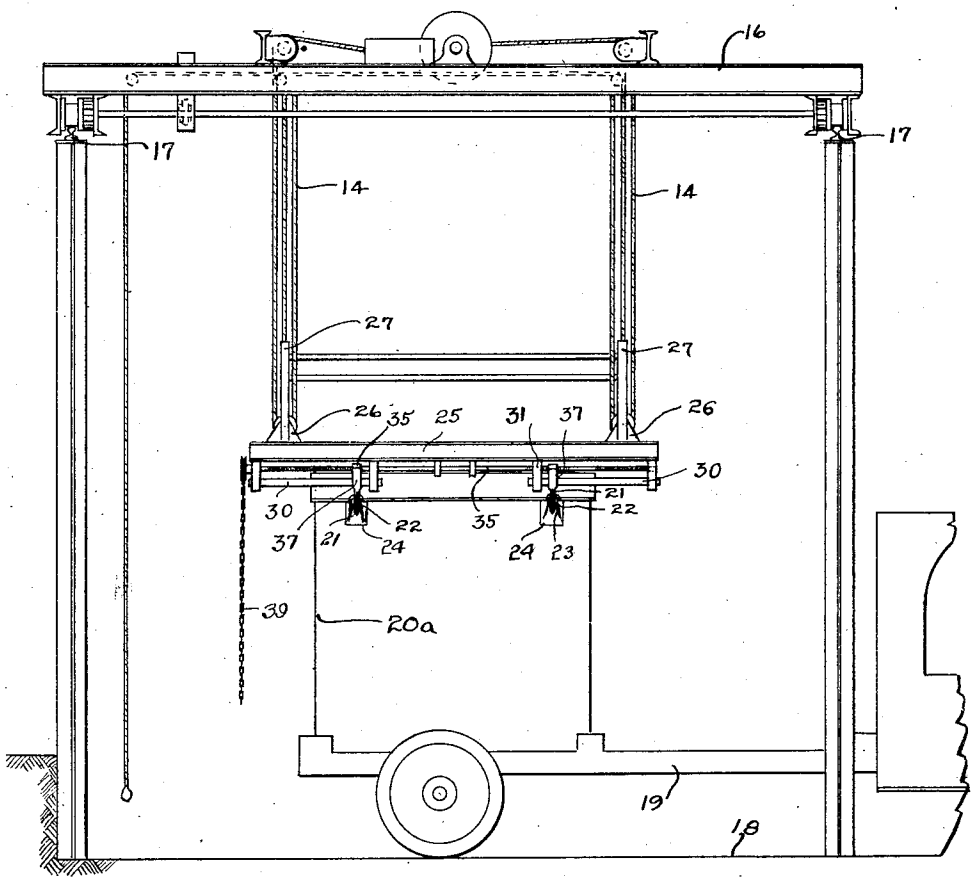

FIG.-2

Inventor

Benjamin F. Fitch,

By Baker Macklin Goodrich & Kearns,

Attorneys

Nov. 22, 1927. 1,650,118

B. F. FITCH

LOAD LIFTING DEVICE

Filed Sept. 30, 1924 3 Sheets-Sheet 3

FIG.-3

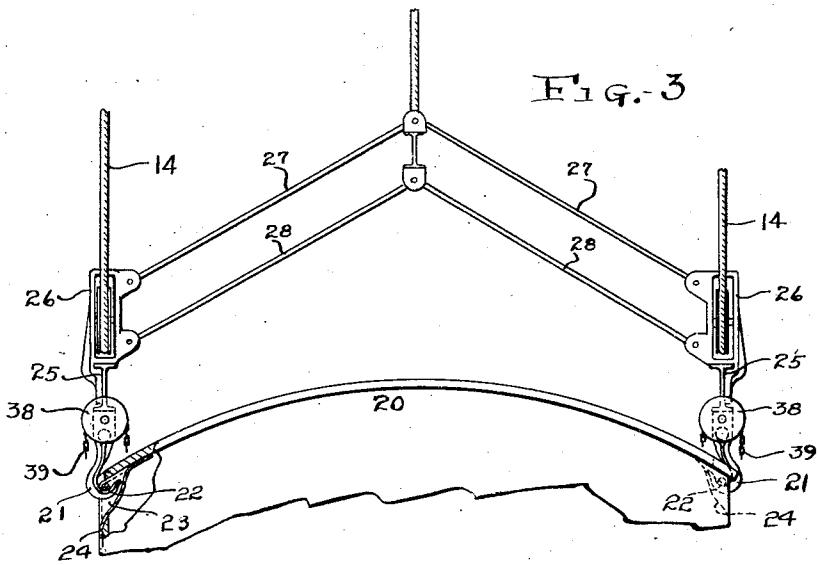

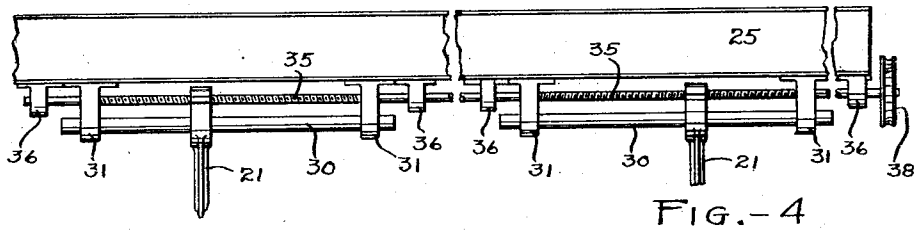

FIG.-4

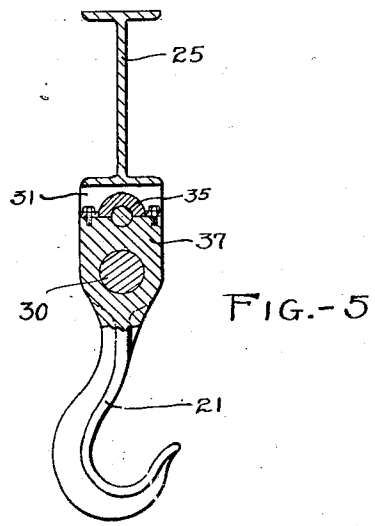

FIG.-5

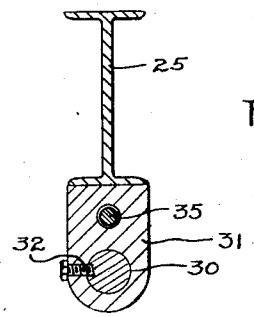

FIG. 6

Inventor

Benjamin F. Fitch,

By Baker, Macklin, Goldrick & Fox

Attorneys

Patented Nov. 22, 1927. 1,650,118

UNITED STATES PATENT OFFICE.

BENJAMIN F. FITCH, OF GREENWICH, CONNECTICUT.

LOAD-LIFTING DEVICE.

Application filed September 30, 1924. Serial No. 740,793.

This invention relates to improvements in hoisting mechanism and is primarily concerned with the construction of means for facilitating the engagement of a load, such as a removable automobile body.

The use of removable automobile bodies as containers for transporting freight as a unit from one distributing point to another, is a satisfactory arrangement wherein all of the freight in a container is consigned to one destination. To avoid the necessity of transporting an entire automobile body or breaking bulk in the event only a fractional load is consigned to one destination, it is desirable to use fractional sized containers arranged to be mounted on a truck, and to be handled in the same manner as the entire container.

The general object of my invention is the provision of effective station equipment readily adjustable to handle containers of various sizes. My invention accomplishes this, without affecting the relationship of the independent hoisting cables, and thus I can adapt existing hoisting and conveying apparatus for the handling of fractional sized containers.

One of the means for carrying out my object is illustrated in the accompanying drawings and is set forth in detail in the following description, while the essential characteristics are summarized in the claims.

In the drawings, Fig. 1 is a side elevation showing a hoisting mechanism embodying my invention and illustrating the use thereof upon a full-sized container; Fig. 2 is a similar elevation illustrating the use upon a fractional-sized container; Fig. 3 is an end view of the cradle to which my invention may be attached; Fig. 4 is a side elevation showing a part of the cradle; and Figs. 5 and 6 are sections taken on the correspondingly numbered lines in Fig. 4.

In carrying out my invention, I have illustrated a cradle, of articulated form having longitudinal members or beams 10 and 11 which are connected at the ends by transverse members 12 and 13, respectively. The particular construction of the cradle is illustrated in my copending application, Serial No. 463,531, filed April 22, 1921, and is shown herein merely in connection with the improvement for facilitating the handling of various sized containers.

In Fig. 1 the cradle is illustrated as being suspended by cables 14 which depend from an overhead traveling crane indicated in general at 16. The crane is arranged to travel on an overhead trackway 17 which extends over a truck runway 18. Accordingly, a truck indicated at 19 having a removable body or container 20 thereon may enter the runway transversely thereof, and then the cradle lowered over the container so as to bring the load-engaging members 21 thereon into engagement with engageable device 22 on the container for enabling the latter to be raised from the truck.

I have shown the load engaging members 21 carried by the cradle as comprising inwardly facing hooks, and the cooperating devices 22 on the body as comprising short longitudinal bars carried in conveying pockets 23 in members 24 set into the body adjacent the upper edge. Such pocket members are more fully shown and described and are claimed in my Patent No. 1,485,972, issued March 4th, 1924.

Referring now to Figs. 3 to 6, I have shown the cradle as having longitudinally extending members 25 which depend from brackets 26. These brackets support sheaves over which the cables are arranged to pass, and also provide a pivotal connection for one end of transverse spreading members 27 and 28 respectively. The longitudinally extending members 25 are shown as I-beams, each of which is arranged to support two load engaging members 21. In the preferred form each member 21 is slidably mounted upon a bar 30 which is supported by brackets 31. The brackets may be rigidly attached to bottom flange of the beams 25 and may be provided with securing members 32 for holding the bars in adjusted position.

To permit adjustment of the load engaging members for enabling one cradle to be used to engage different sized containers, I provide mechanism for effecting movement of the load engaging members, with relation to the longitudinal cradle beams. One form of mechanism for effecting this operation is shown in Figs. 4 and 5, as embodying a shaft 35 which may extend longitudinally of the beam 25 and be journaled to suitable bearings at 36. Each load engaging member then may have an extension 37 which has a threaded opening to receive the shaft 35. Thus the load engaging member is prevented from swinging about the bar 30 as a pivot, yet is caused to be moved longitudi-

nally of the bar whenever the shaft 35 is rotated.

To rotate the shaft 35, I have shown a chain wheel 38 rigidly mounted upon the shaft and adjacent the end of the beam 25, and I have illustrated a hand chain 39 passing over the wheel. As shown in Fig. 3, independent chain mechanism is provided for actuating the load engaging members on each side of the cradle. This permits the two members on one side of the cradle to be moved simultaneously and independently of the members on the opposite side, but if desired the two screw shafts may be operatively interconnected. The thread on the shaft 35 is preferably of steep pitch, so as to enable the load-engaging members to be moved with a relatively fast motion.

Fig. 1 shows a full sized container on a truck adapted to be engaged by the load engaging members 21 of the cradle. These members are accordingly in their spread position as shown, and when such cradle is lowered over the top of the body and the hinge of the spreading members drawn up, the hooks 21 pass inwardly beneath the pocket bars 22. The point of engagement of the hook with the pocket bar, being preferably directly below the cradle bar 30, the load may be lifted without placing any stress on the screw shaft 35.

If the mechanism is to be used for lifting a sectional container, as shown in Fig. 2, then the shafts 35 are rotated by actuation of the hand chains 39 until the associated hooks 21 are moved inwardly sufficiently to register with the pockets on the container at 20^a. The container may then be raised in the usual manner.

In view of the foregoing description it will be evident that my invention provides a mechanism which enables one cradle to be used for engaging various sized containers and quickly changed from one setting to another. No change whatsoever is required in the mechanism which supports and hoists the cradle.

Having thus described my invention, I claim:—

1. In combination, a hoisting cradle comprising a pair of spaced beams, screw shafts carried by said beams, load engaging members threaded onto the respective shafts, means for rotating the shafts, and means for preventing rotation of the members when the shafts are rotated, whereby the members may be caused to move along the shaft with relation to each other and to the beams, and whereby a load may be engaged at the four corners of a rectangle.

2. In combination, a hoisting cradle having a pair of side bars, a pair of brackets on the underside of each side bar, a longitudinal bar mounted in each pair of brackets, a rotatable screw mounted in the same pair of brackets, and a hook slidably mounted on the bar carried by the brackets and having a nut engaging the screw.

3. A hoisting cradle comprising a pair of supporting bars, means for spreading them while maintaining them parallel to their normal position, a pair of aligned bars supported by each supporting bar beneath the same, a hook on each of said aligned bars, and a pair of mechanisms carried by the respective supporting bars for shifting the hooks on that side toward or from each other.

4. In combination, a hoisting cradle having laterally spreadable beams, brackets depending therefrom, bars supported in the brackets, inwardly facing hooks slidably mounted on the bars, and means carried by the cradle for selectively moving the hooks along the bars with relation to the cradle.

In testimony whereof, I hereunto affix my signature.

BENJAMIN F. FITCH.