# United States Patent [19]

**Caves**

[11] **Des. 270,804**

[45] ** **Oct. 4, 1983**


[54] **ICE CHEST**


[75] Inventor: **Thomas F. Caves,** Tustin, Calif.

[73] Assignee: **John C. Swann,** El Toro, Calif.



[**] Term: **14 Years**

[21] Appl. No.: **295,745**

[22] Filed: **Aug. 24, 1981**

[51] **Int. Cl.** ..... **D07—01**

[52] **U.S. Cl.** ..... **D7/77**

[58] **Field of Search** ..... D7/76, 77, 78, 16, 18; D9/424, 425, 430, 431, 432



[56] **References Cited**

U.S. PATENT DOCUMENTS

D. 212,440 10/1968 Cannon et al. ..... D7/77

D. 252,179 6/1979 Cherry ..... D7/77 X

OTHER PUBLICATIONS

*Metroplex Foam Molding Brochure,* Form #280–1 Styrofoam Coolers, Model 9, no date, Combo-Pak, lower left.

*Area Distributing Co. Brochure,* Perma ® P Ice Chests, JTR Company, item #307 32 Qt. Plus Chest, bottom left, no date.

*Mahoney Plastics Corporation,* cover page, no date, Cooler Chests at top and bottom R.

Brochure from Southwest Foam Moulding, Inc., 1/1/76.



*Primary Examiner*—Winifred E. Herrmann

*Attorney, Agent, or Firm*—Klein & Szekeres


[57] **CLAIM**

The ornamental design for an ice chest, as shown.

**DESCRIPTION**

FIG. **1** is a top plan view of an ice chest, showing my new design;

FIG. **2** is a front elevational view thereof;

FIG. **3** is a rear elevational view thereof;

FIG. **4** is a bottom plan view thereof;

FIG. **5** is a side elevational view taken from the right side of FIG. **1**; and

FIG. **6** is a side elevational view taken from the left side of FIG. **1**.

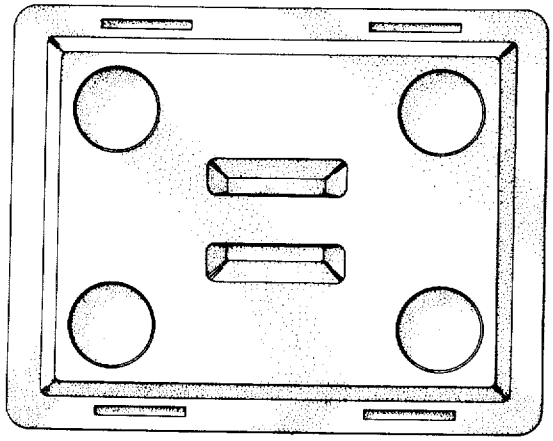

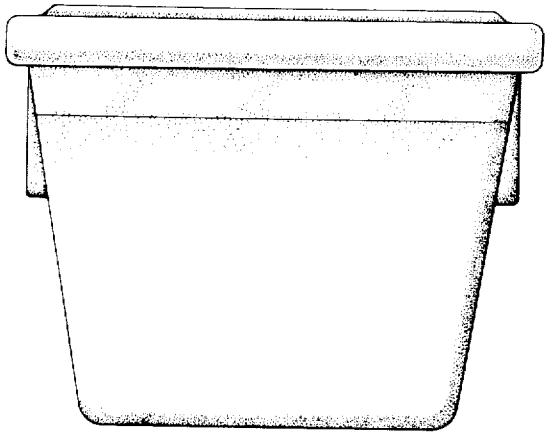

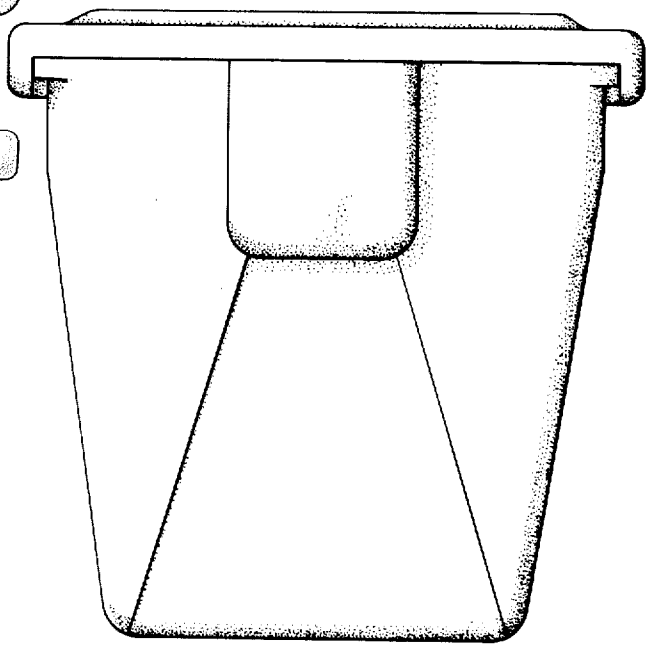

FIG. 1

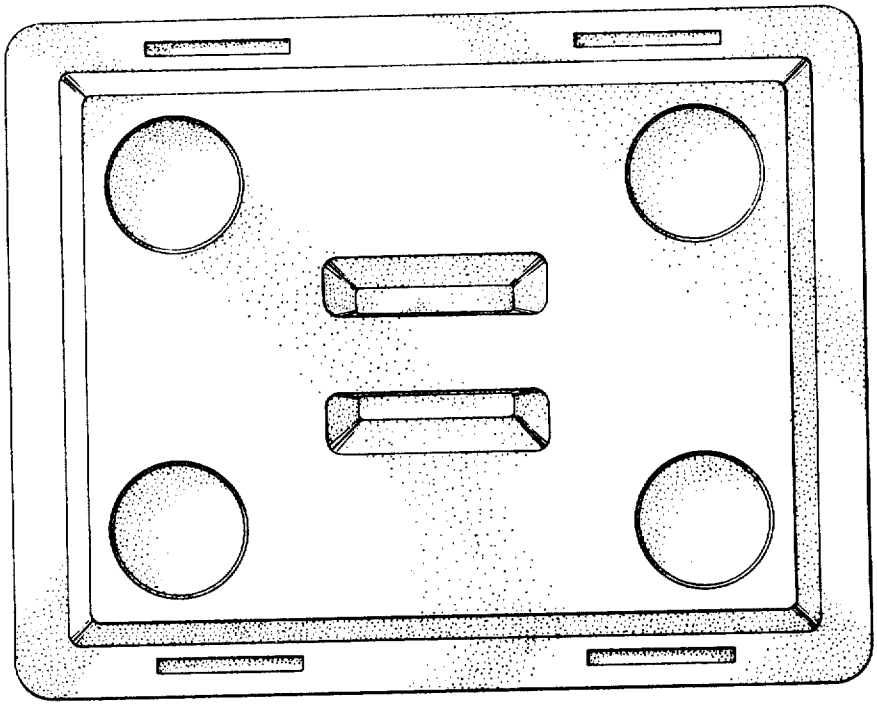

FIG. 2

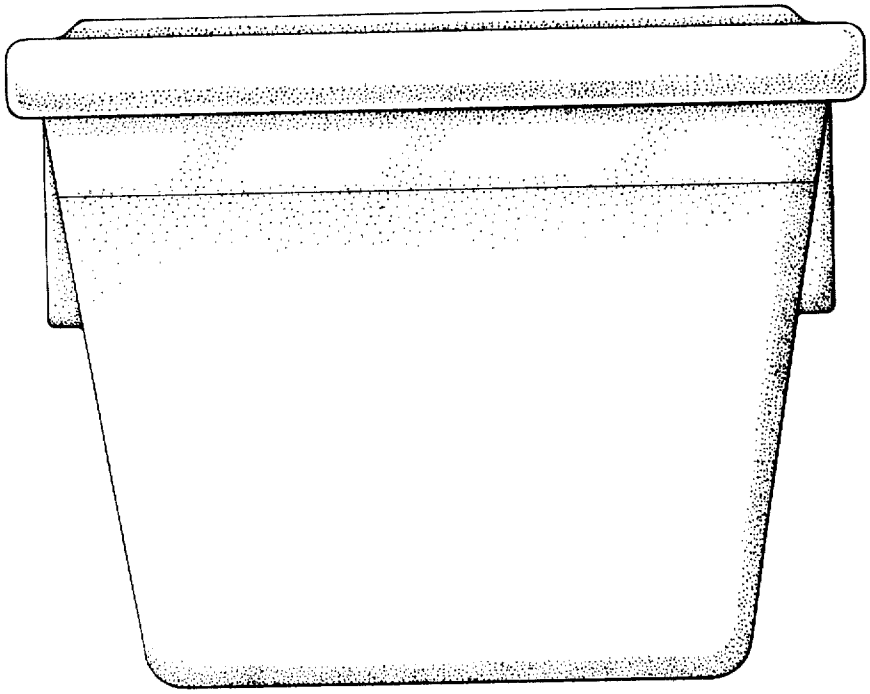

FIG. 3

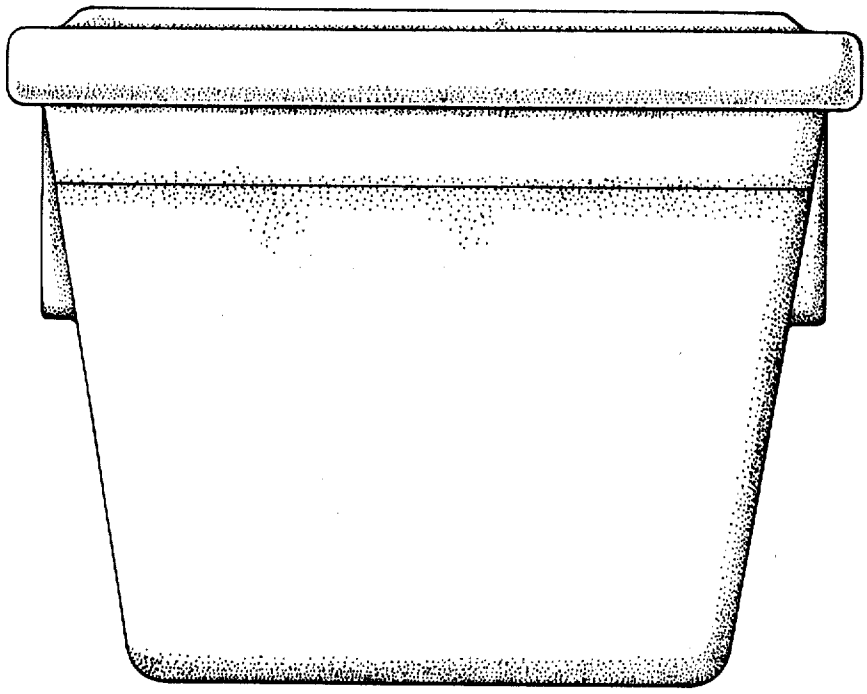

FIG. 4

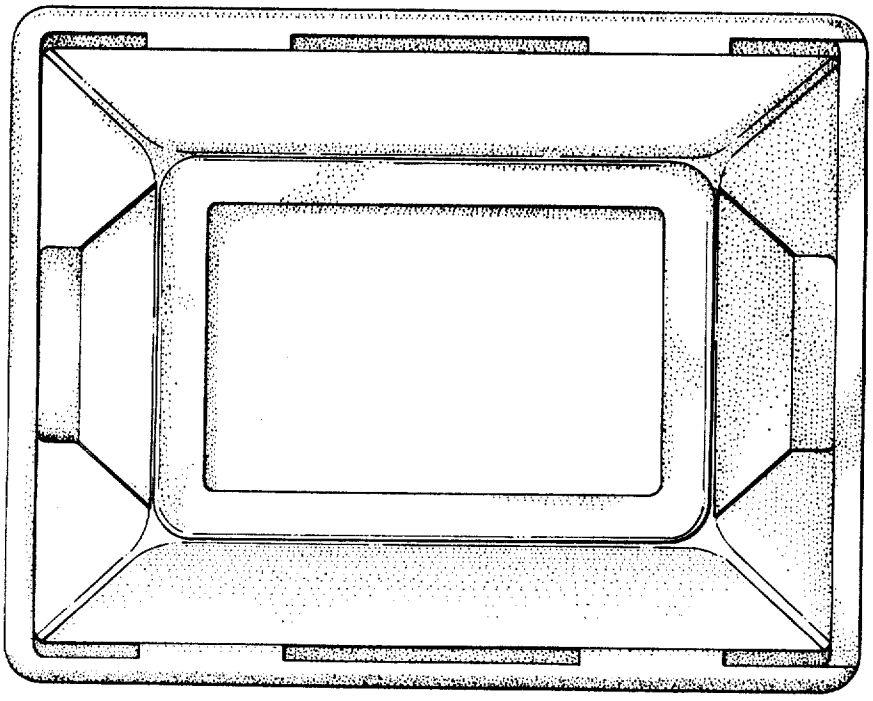

FIG. 5

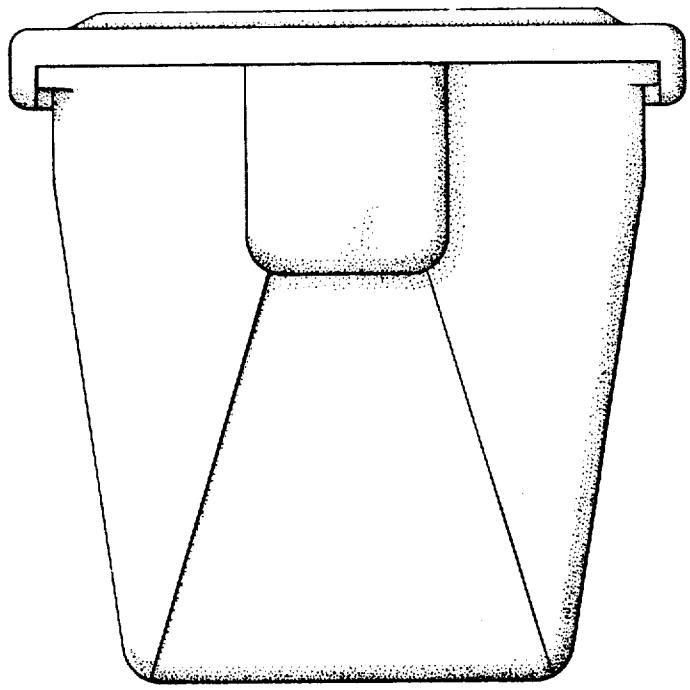

FIG. 6

