Nov. 4, 1947. J. B. WHITTED 2,430,151

ELECTROMAGNETIC MOTOR

Filed Aug. 12, 1943 4 Sheets-Sheet 1

Fig. 1.

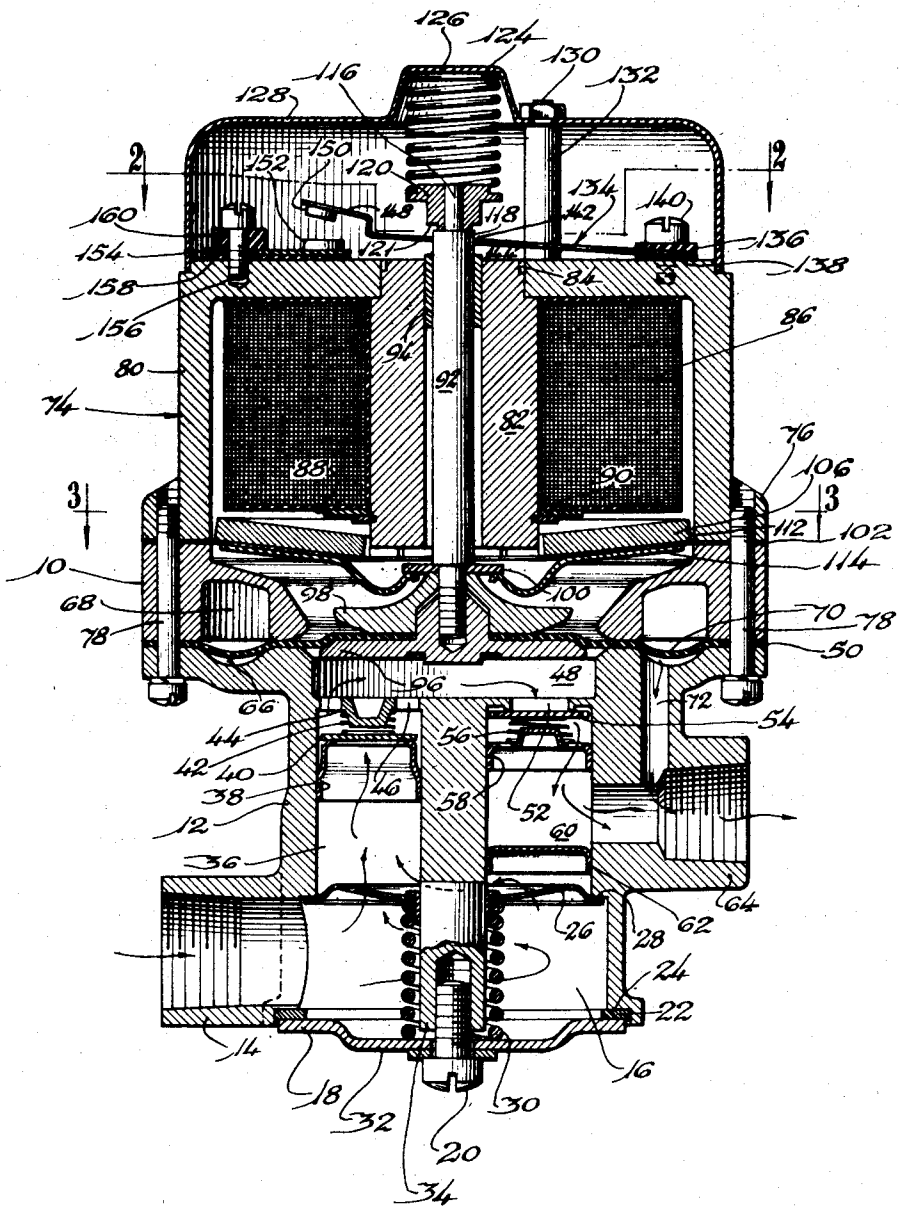

Inventor:
John B. Whitted
By Williams, Bradbury & Hinkle
Attorneys.

Nov. 4, 1947. J. B. WHITTED 2,430,151

ELECTROMAGNETIC MOTOR

Filed Aug. 12, 1943 4 Sheets-Sheet 2

Fig. 2.

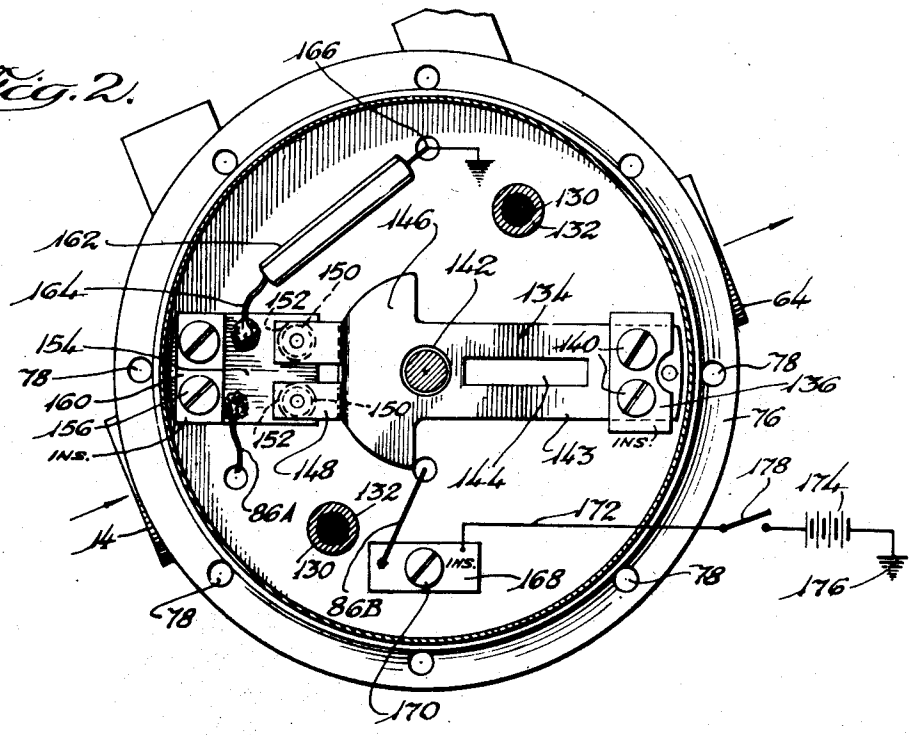

Fig. 3.

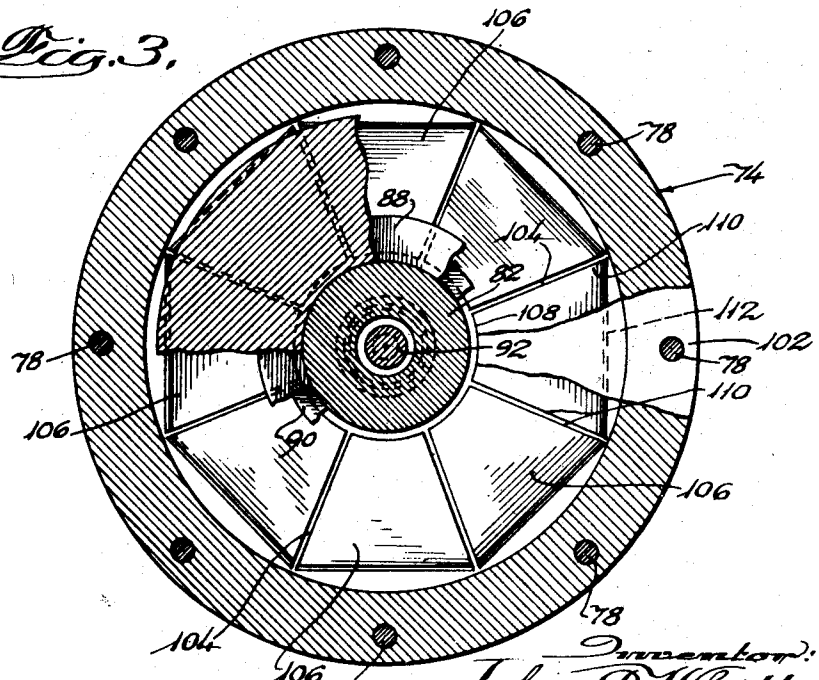

Inventor:
John B. Whitted
By Williams, Bradbury & Hinkle
Attorneys.

Nov. 4, 1947. J. B. WHITTED 2,430,151

ELECTROMAGNETIC MOTOR

Filed Aug. 12, 1943 4 Sheets-Sheet 3

Fig. 4.

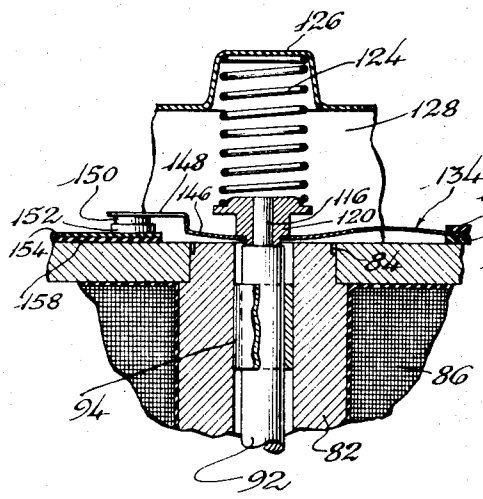

Fig. 5.

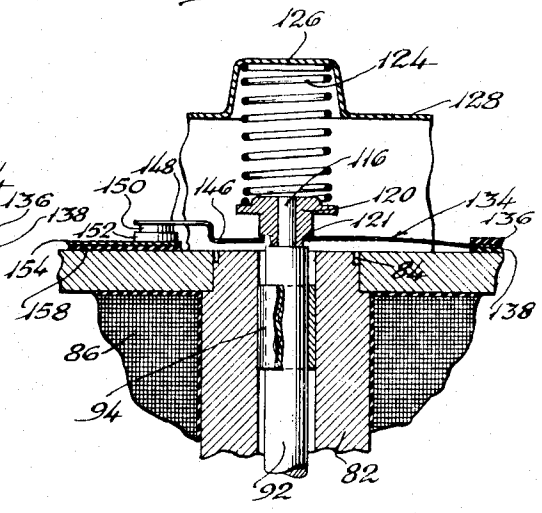

Fig. 6.

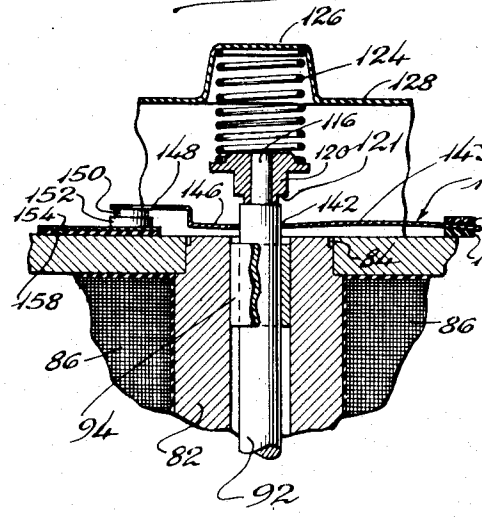

Fig. 7.

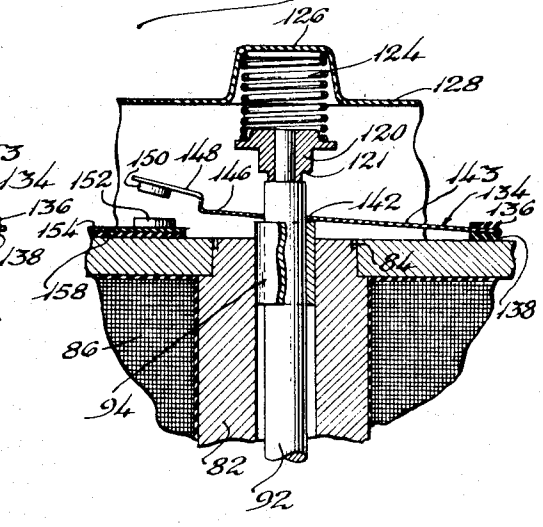

Inventor:
John B. Whitted
By Williams, Bradbury & Hinkle
Attorneys.

Nov. 4, 1947. J. B. WHITTED 2,430,151

ELECTROMAGNETIC MOTOR

Filed Aug. 12, 1943 4 Sheets-Sheet 4

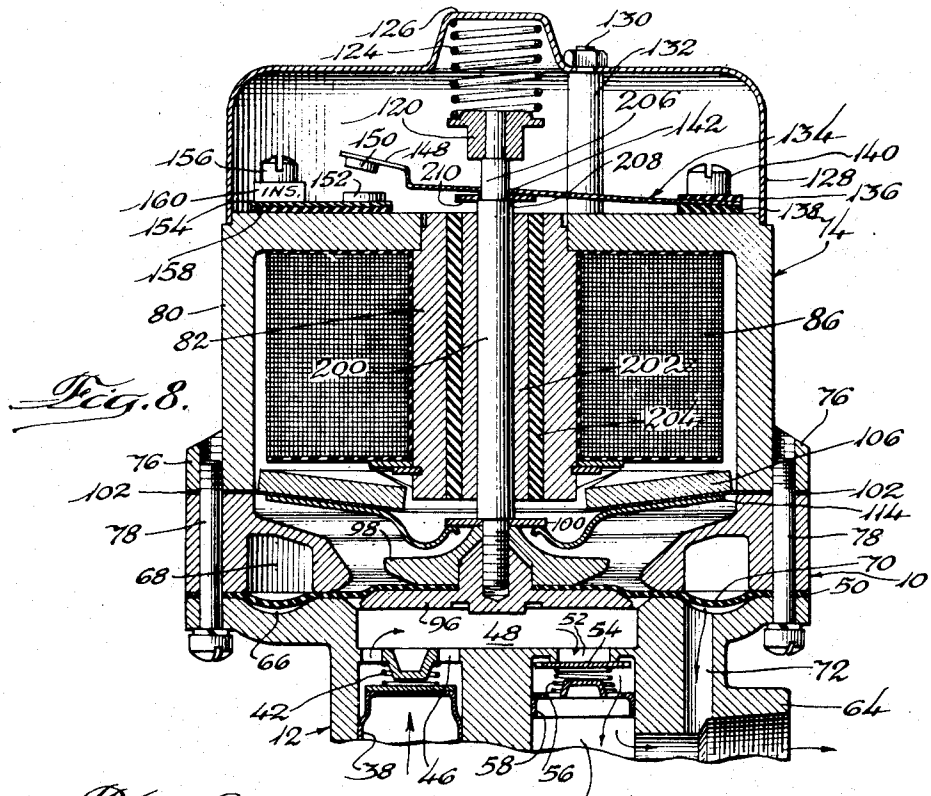

Fig. 8.

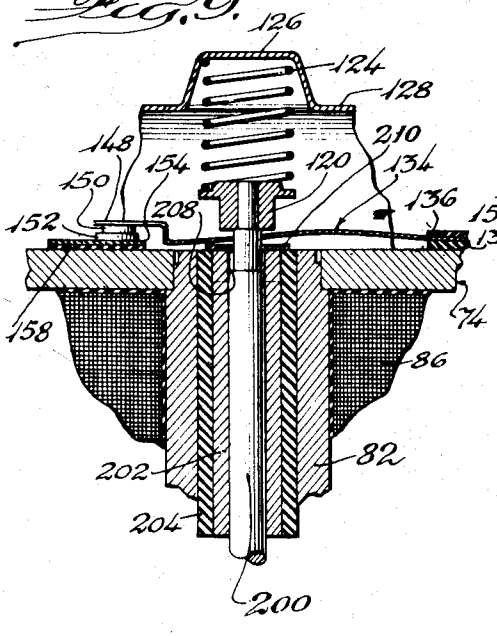

Fig. 9.

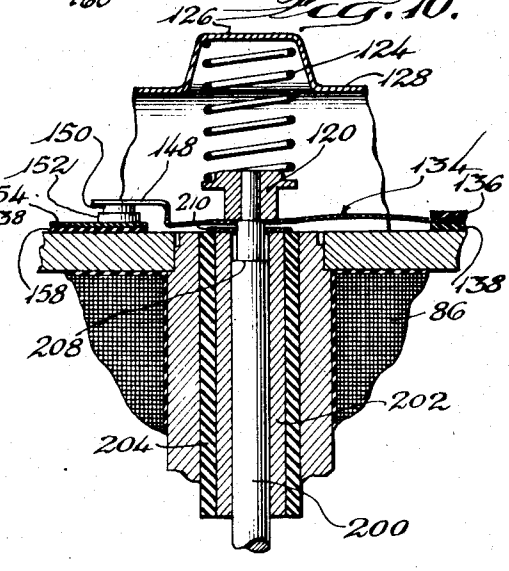

Fig. 10.

Inventor:
John B. Whitted
By Williams, Bradbury & Hinkle
Attorneys.

Patented Nov. 4, 1947 2,430,151

UNITED STATES PATENT OFFICE

2,430,151

ELECTROMAGNETIC MOTOR

John B. Whitted, Evanston, Ill., assignor to Stewart-Warner Corporation, Chicago, Ill., a corporation of Virginia

Application August 12, 1943, Serial No. 498,382

10 Claims. (Cl. 172—126)

1

My invention relates to electric fuel pumps and is more particularly concerned with, but not limited to, fuel pumps of the kind used in engines of automobiles and for similar purposes.

An object of my invention is to provide a new and improved electric fuel pump which is extremely simple in construction, efficient in operation and inexpensive to manufacture.

Another object of my invention is to provide an electric fuel pump having new and improved switch mechanism.

Another object of my invention is to provide an electric fuel pump having new and improved means for insuring proper making and breaking of the switch contacts and for minimizing wear, burning, or other deterioration of these contacts.

Another object of my invention is to provide an electric fuel pump having new and improved means for smoothing out the flow of fuel discharged by this pump.

Other objects and advantages will become apparent as the description proceeds.

In the drawings:

Fig. 1 is a vertical, sectional view of a fuel pump embodying my invention;

Fig. 2 is a generally transverse, cross-sectional view taken on the irregular line 2—2 of Fig. 1;

Fig. 3 is a transverse view taken on the line 3—3 of Fig. 1;

Figs. 4, 5, 6 and 7 are partial, sectional views showing successive stages in the operation of the switch mechanism and associated parts;

Fig. 8 is a view similar to Fig. 1, but showing a different form of my invention; and

Figs. 9 and 10 are partial, sectional views showing successive stages in the operation of the switch mechanism and associated parts.

The embodiment shown in Figs. 1 to 7, inclusive, has a two-part base, consisting of an upper part 10 and a lower part 12. The parts 10 and 12 are preferably made of non-magnetic material and may be formed by die casting, moulding, or in any other suitable manner. The lower part 12 has an inlet nipple 14 adapted to be threadedly connected to a pipe leading to the main fuel tank at the rear of an automobile or to any other source of fuel supply. This nipple 14 communicates with an inlet chamber 16 which is closed at its lower end by a plate 18 secured to the part 12 by a screw 20. A sealing washer 22 is preferably clamped between the plate 18 and a shoulder 24 provided by the base part 12 to prevent leakage of fuel therebetween.

An annular strainer 26 is provided to remove dirt or any other impurities from the fuel before

2

this fuel reaches the pumping mechanism and valves associated therewith. This strainer is held against a shoulder 28 by a spring 30 resting on the plate 18. The central portion 32 of the plate 18 may be recessed to space this central portion from the lower end of the stem 34 into which the screw 20 is threaded, so that greater force can be exerted on the sealing washer 22. This recessed portion 32 also forms a convenient trap for impurities separated from the fuel and these impurities can be removed by unscrewing screw 20 and removing plate 18.

After passing through the strainer 26, the fuel flows upwardly through a passage 36 having a valve seat 38 press fitted therein. A disc valve 40 is pressed against this seat by a spring 42 whose upper end surrounds a projection 44 having ports 46 located around the sides thereof and connecting the passage 36 with a pumping chamber 48. The pumping chamber is closed by a diaphragm 50 clamped between the upper and lower parts 10 and 12, respectively, of the base.

Fuel is discharged from the pumping chamber 48 through a port 52 normally closed by a valve 54. This valve is urged against its seat by a spring 56 resting on a spider 58 press fitted into an outlet passage 60. This passage 60 is sealed from inlet chamber 16 by a sheet metal partition 62 press fitted into the lower end of the passage 60. An outlet nipple 64 communicates with the discharge passage 60 and is threaded for attachment to a pipe leading to an engine carburetor, burner, or other device for utilizing the fuel.

The lower part 12 of the base has an annular groove 66 located immediately beneath an annular groove 68 provided in the upper part 10. A loose, annular portion 70 of the flexible diaphragm 50 divides these annular grooves into two annular compartments of varying capacity. The upper of these compartments contains trapped air, whereas the lower of these compartments is connected by bore 72 with the interior of the outlet nipple 64 whereby fuel discharged from the pumping chamber 48 can flow upwardly through bore 72 and into the annular space beneath the portion 70 of the diaphragm. Annular bands of the diaphragm 50 on opposite sides of the portion 70 are tightly clamped between adjacent portions of the upper and lower parts of the base whereby no fluid or air can escape from the annular grooves 66 and 68, so that these grooves and the portion 70 of the diaphragm form an annular compression chamber which minimizes the

pulsations resulting from operation of the electric fuel pump.

A steel housing indicated generally by reference number 74 is provided with threaded bosses 76 whereby it may be connected to the two portions of the base by means of screws 78. The housing 74 comprises an outer portion 80 and a sleeve or core 82 having its upper end press fitted into the in-turned upper end of the outer portion 80 to form a unitary structure. The extreme upper end of the sleeve 82 is provided with an annular groove 84 forming an air gap between the extreme end of the sleeve and the adjacent portion of the outer member 80. An electrical coil 86 is located in the housing 74 and is secured in place by a washer 88 and C-ring 90, which is secured in a groove suitably located in the sleeve 82.

A diaphragm operating rod 92, formed of steel drill rod or other suitable magnetic material, is reciprocably mounted in the housing 74 and has an oilless bronze bushing 94 press fitted thereon. This bushing slides freely in the bore of the sleeve 82 and guides reciprocating movement of the rod 92 therein. The lower end of the rod 92 is of reduced diameter and threaded into the central boss of a diaphragm plate 96 located beneath the central portion of the diaphragm. The plate 96 serves to clamp a second diaphragm plate 98 against a thrust washer 100 abutting a shoulder formed by the reduced lower end of the rod. The plates 96 and 98 lie on opposite sides of the central portion of the diaphragm 50 and serve to control the position of the diaphragm in the pumping chamber.

An annular spring 102, preferably of beryllium copper about $\frac{5}{1000}$ of an inch thick, has its outer edge clamped between the housing 74 and upper part of the base. The inner portion of this spring is divided into eight tapered segments by radial slots 104. A steel armature segment 106 is soldered, welded, or otherwise suitably secured to one side of each of these spring segments. Each of these armature segments has a curved inner end 108 and tapered sides 110 corresponding respectively to the curved inner end of the spring segments and the tapered sides of these segments. The outer end or base 112 of each armature segment is straight and forms a cord of the circle formed by the adjacent wall of the housing 74. A finger 114 is secured to the under side of each spring segment by soldering, welding, or in any other suitable manner, and each finger has an inner end located beneath the thrust washer 100 and adapted to raise this washer, rod 92, and associated parts when electrical coil 86 is energized.

The upper end of the rod 92 is of reduced diameter, as indicated at 116, thereby forming a shoulder 118 which supports a button 120 of aluminum or other non-magnetic material. The extreme lower end of the button is preferably of smaller diameter than the main body of the rod 92 and forms a shoulder 121 spaced slightly above this portion of the rod and of appreciably greater diameter. This button forms a support for the lower end of a diaphragm return spring 124. The upper end of this spring rests in a depression 126 formed in a sheet metal cover 128 attached to the upper end of the housing 74 by studs 130 surrounded by spacing sleeves 132.

A resilient steel switch 134 has its right-hand end clamped between plates 136 and 138 secured to the housing 74 by screws 140. The plate 138 is preferably wedge shaped in cross section to give the switch the normal inclination shown in Fig. 1.

The fixed end of the switch is grounded to the housing 74. The switch 134 is provided with an opening 142 through which the rod 92 freely passes. This opening, however, is of smaller diameter than the shoulder 121 of the button 120. That portion 143 of the switch between the opening 142 and the point of attachment to the housing 74 is provided with a longitudinal slot 144 which increases the flexibility of this portion of the switch. That portion 146 of the switch immediately to the left of the center of the opening 142 is made wider than the remaining parts of the switch and constitutes an armature portion which is more strongly attracted by the adjacent end of the housing 74 than are other portions of the switch. The extreme left-hand end of the switch is offset upwardly and is divided into two fingers 148, each of which carries a movable contact 150.

The movable contacts 150 are adapted to engage a pair of stationary contacts 152 carried by a metal switch plate 154 secured to the housing 74 by screws 156. The switch plate 154 is insulated from the housing 74 and screws 156 by an insulating strip 158 and insulating washers 160. One end 86A of the coil 86 is soldered or otherwise secured to the switch plate 154 and this switch plate is grounded through a high resistance 162 having one end soldered to the switch plate 154, as indicated at 164, and the other end soldered to the upper end of the housing 164, as indicated at 166. The other end 86B of the coil 86 is soldered to a terminal plate 168 secured to the housing 74 by a screw 170 and insulated from this housing in any suitable manner.

An electrical conductor 172 connects terminal plate 168 with the positive terminal of a battery 174, or other suitable source of electricity, the other terminal of the battery being grounded as indicated at 176. A switch 178 is preferably interposed between the battery and terminal plate 168. Where my fuel pump is applied to an automobile, this switch 178 would ordinarily be the ignition switch of the automobile electrical system.

When my fuel pump is first assembled, the spring 124 holds the central portion of the diaphragm in depressed position with the movable contacts 150 in engagement with the fixed contacts 152. As soon as the switch 178 is closed, the coil 86 is energized and exerts an upward pull on the armature segments 104 and fingers 114. These fingers thereupon exert an upward thrust on the washer 100 and operating rod 92 to raise the central portion of the diaphragm against the resistance of the spring 124. As the armature segments and fingers move upwardly, the spring 102 flexes along lines connecting the closed ends of the slots 104 and lying immediately adjacent the lower edges of the straight bases 112 of the armature segments 106, so that these lines of flexation constitute the pivots about which the armature segments and fingers move. This initial energization of the electrical coil 86 magnetizes the operating rod 92, which thereupon becomes, and thereafter remains, a permanent magnet.

As the central portion of the diaphragm and the operating rod 92 move upwardly, the switch 134 is held in closed position by the magnetic pull between this switch and the adjacent end of the housing 74. This magnetic pull acts most strongly on the armature portion 146 of the switch and is increased by the presence of the annular groove 84 in the upper end of the housing 74. This causes the slotted portion 143 of the

switch 134 to bow upwardly, as clearly shown in Fig. 6, and this upward bulge of the switch is increased somewhat when the bushing 94 first engages the lower side of the switch.

Continued upward movement of the rod 92 and bushing 94 causes the latter to force the armature portion 146 of the spring away from the adjacent end of the housing and to separate the movable contacts 150 from the fixed contacts 152, thereby breaking the circuit to the electrical coil 86. The stress created by the curvature of the slotted portion 143 of the spring just prior to this break causes the contacts 150 to move away from the fixed contacts 152 with a whipping action which materially reduces sparking at these contacts and greatly contributes to the long and trouble-free operation of my invention. The switch 134 immediately assumes the position shown in Fig. 7, with the movable and fixed contacts widely separated. Arcing at the contacts is further reduced by the presence of the resistance 162 which provides a high resistance ground connection for the fixed contacts.

After the circuit of the coil 86 has been broken, upward movement of the rod 92 and central portion of the diaphragm 50 stops and spring 124 exerts a force tending to return these parts to the position of Fig. 4, and to discharge fuel from the pumping chamber 48 into which the fuel was drawn by the preceding upward movement of the diaphragm. After the diaphragm has moved down an appreciable distance, the shoulder 121 of the button 120 engages the switch 134 and moves the free end of this switch downwardly. Fig. 5 shows the position of the parts when the movable and fixed contacts first engage.

The initial engagement of these contacts creates a flow of current in the coil 86 and the effect of this initial flow is to create a condition tending to separate the contacts 150 and 152. It is, therefore, of great importance to provide special means to maintain these contacts in closed position and to prevent the chattering of the contacts which would occur if such special means were not provided. In my invention the magnetic pull exerted by the shoulder 118 of the magnetic operating rod 92 on the switch 134 suffices to hold the contacts in firm engagement until continued downward movement of the operating rod and button 120 causes the shoulder 121 of the latter to press these contacts together more firmly.

This downward movement of the rod 92 and central portion of the diaphragm continues until the magnetic force built up by the energization of the coil 86 is sufficient to overcome the inertia of the parts and the force exerted by the spring 124, whereupon the movement is reversed. The magnetization of the housing 74 by the coil 86 creates a strong pull between the armature portion 146 of the switch 134 and the adjacent end of the core 82 and this force is sufficient to maintain the switch contacts in firm engagement even after the shoulder 121 is moved upwardly away from the switch 134, as shown in Fig. 6. In fact, this magnetic pull between the switch and housing becomes so strong that a very appreciable force must be exerted against the switch by the bushing 94 before the switch contacts can be separated.

The rate of descent of the central portion of the diaphragm 50 and, therefore, the speed and frequency of operation of the pump, are determined by the rate at which fuel is consumed by the engine to which the fuel pump is connected.

The discharge nipple 64 is in communication by way of passage 72 with the annular diaphragm portion 70 located in the annular chamber formed by the grooves 66 and 68. The discharge stroke of the central portion of the diaphragm causes the annular portion 70 of this diaphragm to compress air in that portion of the annular chamber thereabove, so that during the succeeding upward or intake stroke of the central portion of the diaphragm, this annular portion of the diaphragm is capable of continuing to supply fuel to the carburetor under the force exerted by the air compressed in the upper portion of the annular chamber. This annular chamber, therefore, serves the dual function of prolonging the discharge stroke of the pump and of smoothing out this flow.

The modification of Figs. 8, 9, and 10, is essentially the same as the embodiment disclosed in Figs. 1 to 7, inclusive. In the second embodiment of my invention, however, diaphragm operating rod 200 is formed of brass or other suitable non-magnetic material and reciprocates in a stationary steel sleeve 202 located in a fixed Bakelite sleeve 204, press fitted into the bore of the central portion or core 82 of the housing 74. The upper end of the rod 200 is of reduced diameter to receive the aluminum button 120, as in the previous embodiment, and this end of the rod has an intermediate reduction 206 providing a second shoulder 208 shown in Fig. 8 as supporting a ferrous washer 210. The intermediate portion 206 of the operating rod projects through the opening 142 in the switch 134.

In the position of the parts shown in Fig. 8, the switch contacts are separated and the washer 210 is in engagement with the switch 134 or may be located immediately therebeneath. As the operating rod 200 and central portion of the diaphragm descend, the button 120 engages the upper side of the switch 134 and moves the free end of this switch downwardly until the movable contacts 150 engage the fixed contacts 152. At the time this occurs, the washer 210 is resting upon the upper end of the steel sleeve 202, as shown in Fig. 10. This sleeve constitutes a permanent magnet and the force exerted by this magnet is transmitted through the ferrous washer 210 to that portion of the switch 134 which is spaced a short distance above this washer, so that the magnetic force of the permanent magnet 202 offsets the separating magnetic action between the switch and the coil housing which is created immediately after the initial closing of the contacts.

The energization of the electrical coil 86 reverses the direction of movement of the operating rod 200 and Fig. 9 shows an intermediate position of the parts during their upward stroke. In this figure, the switch contacts are maintained closed by the magnetic attraction of the upper end of the core 82 for the adjacent portion of the switch 134. Further upward movement of the operating rod 200 causes the shoulder 208 to engage and lift the washer 210. Very shortly thereafter this washer engages the switch 134 to separate the contacts. The free end of the switch 134 and the movable contacts carried thereby fly upwardly under the released resilient force of the curved switch and immediately assume the position shown in Fig. 8, so that arcing of the contacts is avoided.

In normal operation, the downward movement of the operating rod and associated parts is reversed when these parts assume approximately

the position shown in Fig. 10. It is desirable to terminate the downward movement of the operating rod before the switch 134 engages the washer 210 so that the pounding noise which would result from such engagement is eliminated. When the ignition switch is turned off, there is no objection to having the parts come to rest with the switch 134 engaging the washer 210.

From the foregoing description taken in connection with the accompanying drawings, it will be apparent that in both forms of my invention I have provided nonpositive means for holding the movable and fixed switch contacts in engagement immediately after the initial engagement of these contacts and while the armature quivers from the initial surge of current. The coil 86 is thereby allowed to take its full current and one effect of this current is to increase the force of engagement between the fixed and movable switch contacts. In other words, the magnetic attraction of the permanent magnet for the switch 134 offsets any separating force which may result from initial closing of the contacts and prevents the contacts from reopening and chattering in a manner which would occur if no permanent magnet or equivalent force were present.

While I have illustrated and described in detail only two embodiments of my invention, my invention is susceptible to many variations and modifications and includes all variations, modifications, and equivalents falling within the scope of the appended claims.

I claim:

1. Apparatus of the class described, comprising a steel housing, an electromagnet located in said housing, an armature attracted by said magnet, means for movably supporting said armature, a rod moved by said armature in one direction, said rod being of steel, a spring for moving said rod in the opposite direction, a resilient steel switch member carrying a movable contact, and a second switch member having a fixed contact, said resilient member being moved to open and closed positions with movement of said rod, said rod constituting a permanent magnet for holding said resilient member in switch closing position immediately after initial closing of said contacts.

2. In apparatus of the class described, the combination of a magnetic housing, an electromagnet mounted in said housing, an armature movable toward and from said magnet, a rod moved in one direction by said armature, a spring for moving said rod in the opposite direction, a switch mounted on said housing, said switch having movable and fixed contacts, said movable contact being mounted on the free end of a resilient switch member, said member being biased toward open position, and means associated with said rod for opening and closing said switch, said resilient member being magnetically attracted by said housing to hold said contacts in closed position, the free end of said resilient member being more strongly attracted by said housing than other portions of said member.

3. Apparatus of the class described, comprising a steel housing having a central opening therethrough, an electromagnet mounted in said housing and surrounding said opening, a rod located in said opening, said rod being of magnetic material, a collar of nonmagnetic material affixed to said rod and guiding reciprocation of said rod in said housing, a movable armature adapted to be attracted by said electromagnet, means carried by said armature for moving said rod in one direction, a spring for returning said rod, a fixed switch member attached to one end of said housing, a resilient switch member having one end attached to said housing and a second end adapted to move into and out of engagement with said first switch member, a nonmagnetic button carried by said rod for moving said resilient switch member to closed position, said collar being adapted to move said resilient switch member to open position, said resilient switch member being of magnetic material, and said resilient switch member having a first part strongly attracted by the magnetic force of said housing and a second portion of lesser cross-section adapted to flex when said switch member is in closed position.

4. Apparatus of the class described, comprising an annular electromagnetic coil, a housing supporting said coil, an annular spring attached to said housing, said spring having radial slots dividing the inner portion of said spring into a plurality of tapered segments, armature segments attached to said spring segments, said armature segments having tapered sides corresponding to the tapered sides of said spring segments and bases having straight edges determining the line of flexation for said spring segments, a reciprocable rod, means attached to said spring segments and armature segments for moving said rod in one direction, other means for moving said rod in the opposite direction a switch controlling the supply of current to said electromagnetic coil, and means associated with said reciprocable rod for opening and closing said switch.

5. Apparatus of the class described, comprising a housing having an annular wall, an electromagnet mounted in said housing, a plurality of armature segments adapted to be attracted by said magnet, spring means for supporting said armature segments, said spring means comprising an arcuate base and tapered segments formed by radial slots, said spring segments being attached to said armature segments constituting a pivotal mounting therefor, said spring segments urging said armature segments away from said electromagnet, a rod reciprocable relative to said housing, fingers carried by said spring segments for moving said rod in one direction a switch controlling the supply of current to said electromagnetic coil, and means associated with said reciprocable rod for opening and closing said switch.

6. Apparatus of the class described, comprising a magnetic housing, an electromagnet located in said housing, an armature attracted by said magnet, means for movably supporting said armature, a rod moved by said armature in one direction, said rod being of magnetic material, a spring for moving said rod in the opposite direction, a resilient steel switch member carrying a movable contact, and a second switch member having a fixed contact, said resilient member being moved to open and closed positions with movement of said operating rod, said rod constituting a permanent magnet for holding said resilient member in switch closing position immediately after initial closing of said contacts.

7. In apparatus of the class described, the combination of a magnetic housing, an electromagnet mounted in said housing, a plurality of armatures movable toward and from said magnet, a rod moved in one direction by said armatures, a spring for moving said rod in the opposite direction, a switch mounted on said housing, said

switch having movable and fixed contacts, said movable contact being mounted on the free end of a resilient switch member, said member being biased toward open position, and means associated with said rod for opening and closing said switch, said resilient member being magnetically attracted by said housing to hold said contacts in closed position, the free end of said resilient member being more strongly attracted by said housing than other portions of said member.

8. Apparatus of the class described, comprising a steel housing having a central opening therethrough, an electromagnet mounted in said housing and surrounding said opening, a rod located in said opening, said rod being of magnetic material, a collar of nonmagnetic material affixed to said rod and guiding reciprocation of said rod in said housing, a movable armature adapted to be attracted by said electromagnet, a spring pivotally supporting said armature, means carried by said armature for moving said rod in one direction, a second spring for returning said rod, a fixed switch member attached to one end of said housing, a resilient switch member having one end attached to said housing and a second end adapted to move into and out of engagement with said fixed switch member, a nonmagnetic button carried by said rod for moving said resilient switch member to closed position, said collar being adapted to move said resilient switch member to open position, said resilient switch member being of magnetic material, and said resilient switch member having a first part strongly attracted by the magnetic force of said housing and a second portion of lesser cross section adapted to flex when said switch member is in closed position.

9. Apparatus of the class described, comprising an annular electromagnetic coil, a magnetic housing supporting said coil, an arcuate spring attached to said housing, said spring having radial slots dividing the inner portion of said spring into a plurality of tapered segments, armature segments attached to said spring segments, said armature segments having tapered sides corresponding to the tapered sides of said spring segments and bases having straight edges determining the line of flexation for said spring segments, a reciprocable rod, means attached to said spring segments and armature segments for moving said rod in one direction, other means for moving said rod in the opposite direction, and switch means for said coil, said switch means including a flexible magnetic member attracted by said housing, said housing having a groove to increase the attraction between said housing and flexible member.

10. Apparatus of the class described, comprising a housing having an annular wall, an electromagnet mounted in said housing, a plurality of armature segments adapted to be attracted by said magnet, spring means for supporting said armature segments, said spring means comprising an arcuate base and tapered segments formed by radial slots, said spring segments being attached to said armature segments and constituting a pivotal mounting therefor, said spring segments urging said armature segments away from said electromagnet, a rod reciprocable relative to said housing, fingers carried by said spring segments for moving said rod in one direction, and means for moving said rod in the opposite direction.

JOHN B. WHITTED.

REFERENCES CITED

The following references are of record in the file of this patent:

UNITED STATES PATENTS

Number	Name	Date
1,789,611	Van Ranst	Jan. 20, 1931
1,737,389	Redmond	Nov. 26, 1929
1,713,073	Carter	May 14, 1929
2,179,925	Dilg	Nov. 14, 1939
2,169,862	Whitted	Aug. 15, 1939
2,203,464	Harry	June 4, 1940
1,926,074	Warnke	Sept. 12, 1933