United States Patent

Ohta et al.

[15] **3,637,976**

[45] **Jan. 25, 1972**

[54] FIXING DEVICE OF TONER IMAGES

[72] Inventors: **Wasaburo Ohta,** Yokohama; **Kazuhiko Kasuya,** Kawasaki, both of Japan

[73] Assignee: **Ricoh Co., Ltd.,** Tokyo, Japan

[22] Filed: **June 15, 1970**

[21] Appl. No.: **46,371**

[30] **Foreign Application Priority Data**

June 14, 1969 Japan.....44/47203
June 18, 1969 Japan.....44/58208

[52] **U.S. Cl.**.....**219/216,** 219/469
[51] **Int. Cl.**.....**G03g 13/20**
[58] **Field of Search**.....219/216, 388, 469, 470, 471; 100/93 RP; 118/60, 637; 355/9

[56] **References Cited**

UNITED STATES PATENTS

3,202,818	8/1965	Thomiszer	250/65 T
3,471,683	10/1969	Bogue	219/469
3,291,466	12/1966	Aser et al.	219/216 X
3,056,904	10/1962	Kotz et al.	250/65 T X
2,392,695	1/1946	Rohdin	100/93 RP X

Primary Examiner—C. L. Albritton
Attorney—Henry T. Burke, Robert Scobey, Robert S. Dunham, P. E. Henninger, Lester W. Clark, Gerald W. Griffin, Thomas F. Moran, Howard J. Churchill, R. Bradlee Boal, Christopher C. Dunham and Thomas P. Dowd

[57] **ABSTRACT**

Device for fixing toner images developed by a powder development method, comprising a cylindrical heating roller having heating means incorporated therein and a nonadhesive layer of heat-resistant material, such as a synthetic resin, applied over the surface thereof; and a heat resisting and insulating endless belt wrapped over a pair of spaced drive and driven rollers in such a manner that the belt contacts an extended part of the periphery of the rotating heating roller, so that when a recording medium bearing thereupon a toner image is conveyed by the belt and makes contact with the heated peripheral surface of the heating roller, the toner is heated and fused to the recording medium during passage over the entire extended part of the periphery. The heating roller may further include preheating means and fixing at high speed may be attained.

9 Claims, 6 Drawing Figures

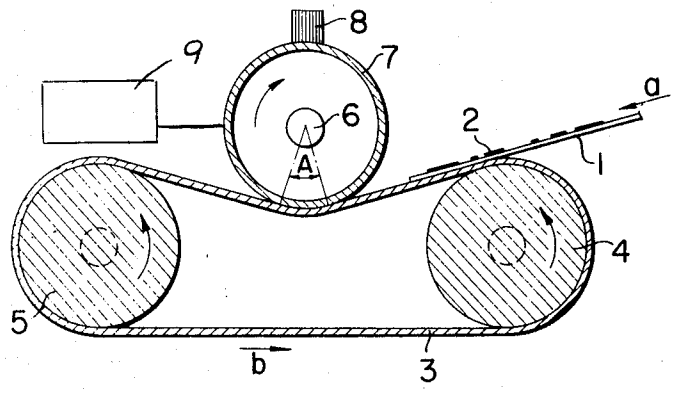

PATENTED JAN 25 1972

3,637,976

SHEET 1 OF 2

FIG. 1

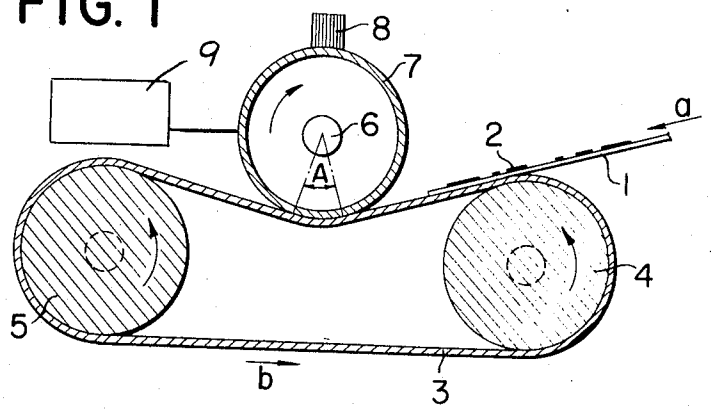

FIG. 2

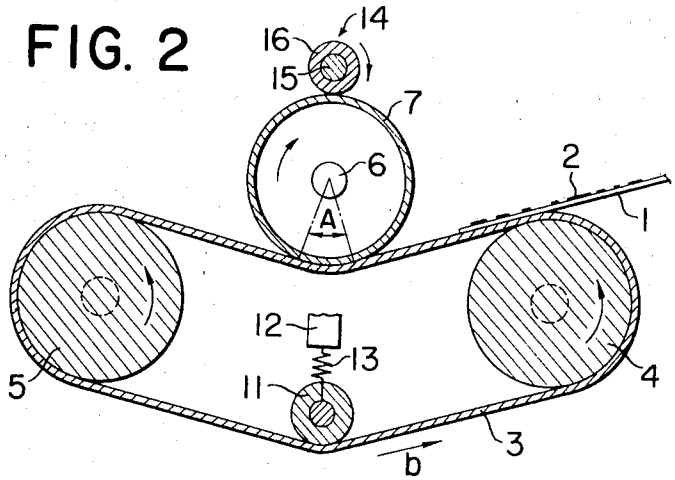

FIG. 3

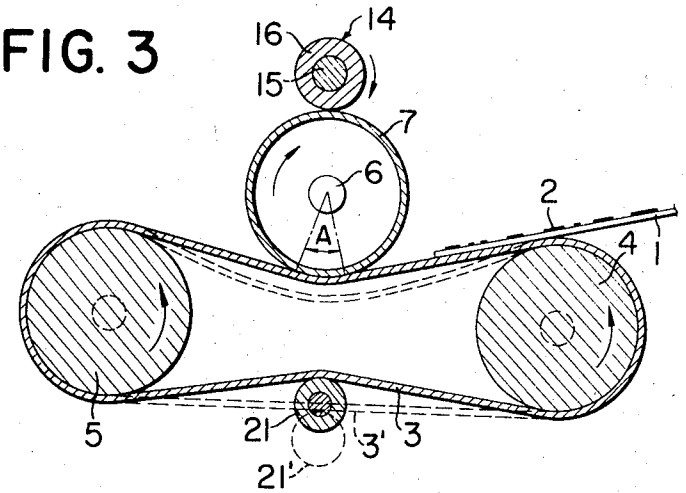

INVENTORS
WASABURO OHTA
KAZUHIKO KASUYA

BY Henry T. Burke

ATTORNEY

FIG. 4

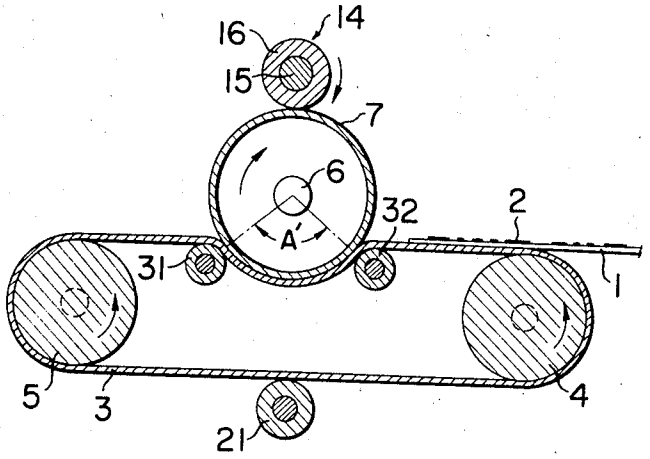

FIG. 5

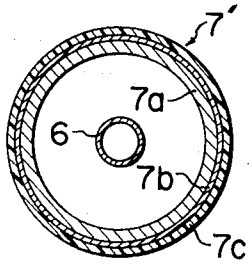

FIG. 6

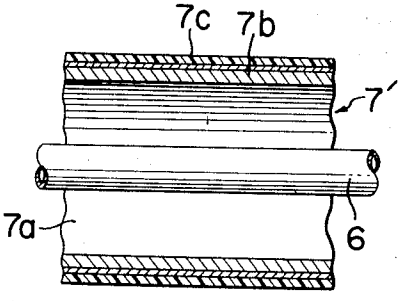

INVENTORS
WASABURO OHTA
KAZUHIKO KASUYA

BY Henry T. Burke

ATTORNEY

FIXING DEVICE OF TONER IMAGES

BACKGROUND OF THE INVENTION

The present invention relates to improvements in heat fusers in electrophotographic devices, and in particular, to an improved device for heat fixing powder images developed by a powder development method.

In Xerography, fixing is accomplished generally by a heating and fusing method or a method employing a fixing agent or solution. Typical heating and fusing fixing methods are disclosed in Japanese Pat. Publication Nos. 6558/1965, and 19196/1968 and Japanese Utility Model Publication No. 18634/1967. These methods have the distinctive defects that considerable time is required to reach a fixing temperature; the thermal efficiency is low; and a rise in the temperature in other parts of the copying machine can not be prevented. Many attempts have been made to accomplish fixing by heating and fusing at high speed, but no satisfactory methods have been proposed so far.

The present invention provides an improved device for fixing at high speed, visible powder images developed by a powder development method and capable of accomplishing fixing of a powder-developed image with the use of heating means whose capacity is smaller than that of the conventional fixing device, whereby the undesired temperature rise in other parts of the copying machine may be prevented, and the thermal efficiency is much improved. Also the powder images may be made to contact a heating roller a longer time than conventional devices to that the images may be fixed at high speed with less heat. Further, the heating roller is normally heated to a preheating temperature less than the fixing temperature and is quickly raised to the fixing temperature only when a recording medium bearing thereupon powder images to be fixed is fed into the fixing device, whereby the rise time to the fixing temperature is much reduced.

SUMMARY OF THE INVENTION

The present invention comprises a cylindrical heating roller incorporating therein heating means and having applied upon the peripheral surface thereof a nonadhesive layer of heat-resistant material, such as a synthetic resin, and a heat resisting and low thermal conductivity endless belt wrapped around a pair of spaced apart drive and driven rollers in such a manner that the endless belt may be wrapped around an extended part of the periphery of the driven heating roller, and whereby when a recording medium bearing thereupon powder images is conveyed by the endless belt, the powder images are made to contact the heating roller over an extended distance so as to be fused and fixed at high speed without any deformation of the image.

According to one aspect of the present invention, a tension roller is so arranged that the endless belt is moved away from the heating roller when no recording medium is being fed into the fixing device, thereby improving the durability of the fixing device. Also, a pair of auxiliary rollers are used to press the endless belt around the desired part of the periphery of the heating roller.

According to another aspect of the present invention, the heating roller has an electrically conductive layer interposed between the peripheral surface of the heating roller and its nonadhesive, heat-resistant layer for preheating the roller at a suitable temperature below the fixing temperature, so that the heating roller may be immediately raised to the fixing temperature when a recording medium bearing powder images is fed into the fixing device.

The above and other features and advantages of the present invention will become more apparent from the following description of illustrative preferred embodiments thereof taken in conjunction with the accompanying drawing.

BRIEF DESCRIPTION OF THE DRAWING

FIG. 1 is a sectional view of a fundamental embodiment of the present invention;

FIGS. 2 to 4 are sectional views illustrating alternate embodiments of the present invention; and

FIGS. 5 and 6 are sectional views of a particular embodiment of heating roller in accordance with the present invention.

DESCRIPTION OF THE PREFERRED EMBODIMENTS:

FIG. 1 shows one embodiment of the present invention. An endless belt 3 made of a heat-resisting material having a low thermal conductivity is wrapped over a pair of spaced apart drive and driven rollers 4 and 5, respectively, rotating in the direction indicated by the arrows. A recording medium, such as a sheet of paper 1, bearing thereupon powder images 2 to be fixed (referred to as "the toner images" hereinafter) is transported by the endless belt 3 in the direction indicated by the arrow *a*.

A cylindrical heating roller, having a heating means 6 incorporated therein, has a suitable part of its peripheral surface in contact with the endless belt 3 when the heating roller 7 rotates in the direction indicated by the arrow, that is, the clockwise direction in FIG. 1. The heating roller 7 is made of a metallic tube, aluminum, copper, etc., or a quartz glass tube having a high heat resistance and having a nonadhesive coating made of a heat resistant material such as a synthetic resin, for example, of the fluorinated type as TEFLON (Trade name of Du Pont DeNemours and Co., for polytetrafluoroethylene) and applied upon the peripheral surface thereof. The heating means 6 may be a tubular heating member such as an infrared lamp, an halogen lamp, a nichrome wire etc., extending substantially along the axial length of the heating roller 7. Suitable temperature control means such as a thermostat (not shown) is used for controlling the heating means 6 so that the surface temperature of the heating roller 7 may be maintained between 130° C and 170° C. The roller 7 is driven by suitable means 9.

It should be noted that the peripheral speed of the heating roller 7 is equal to the traveling speed of the endless belt 3 so that there arises no problem of deformation of the image 2 being fixed in contact with the peripheral surface of the heating roller 7. The heat is applied to the toner image 2 from the heated peripheral surface of the heating roller 7 so that the toner is fused and fixed to the recording medium 1 in a manner well known in the art.

Since the arc portion of the heating roller surface defined by central angle A always presses the recording medium 1 bearing the toner images 2 thereupon against the endless belt 3 when the recording medium 1 passes through the heating roller 7, the fixing time becomes longer so that the fixing may be accomplished in a more efficient manner. This means that the heat generating capacity of the heating means 6 may be decreased so that the temperature rise in other parts of the copying machine embodying the present invention may be advantageously reduced.

It will be readily understood that the relative diameters and positions of the drive and driven rollers 4 and 5 and the heating roller 7 may be so selected that the central angle A, that is the surface area of the heating roller 7 in contact with the recording medium 1 may be increased, whereby the temperature of the heating roller 7 required for fixing the toner images 2 may be further reduced. Therefore, the burning or deformation of the recording medium 1 caused by a high temperature of the heating roller 7 may be prevented.

The quantity of heat required for fixing the toner images 2 is a function of the surface temperature of the heating roller 7 and the time interval during which the recording medium 1 is made to contact the heating roller 7. Therefore, it will be seen that when the feed speed of the recording medium 1, that is the traveling speed of the endless belt 3 is increased, the central or contact angle A should be increased by a suitable arrangement of the endless belt 3 wrapped over the rollers 4 and 5.

A cleaner **8** is in contact with the peripheral surface of the heating roller **7** so as to wipe off the toner and clean the surface. The cleaner **8** also serves to prevent the offset of the recording medium **1**. The cleaner **8** may be made of a heat-resisting brush or silicon-impregnated cloth (silicon cloth) having such mechanical strength that the resin coating applied upon the surface of the heating roller **7** will not be scratched or damaged. Since the toner **2** transferred to the heating roller **7** is in fused or melted condition because the surface of the heating roller **7** is maintained at a temperature 130° C to 170° C as described hereinabove, the toner **2** may be readily cleaned off by the cleaner **8**. Furthermore, the degradation of the image quality by the offset may be prevented by the cleaner **8**.

FIG. **2** shows an alternate embodiment of the present invention. A tension roller **11** is adapted to press against the inner surface of the endless belt **3** in the return path thereof by a spring **13** one end of which is securely fixed to a stationary member **12** so that the tension force of the endless belt **3** is suitably adjusted, whereby any deviation between the peripheral speed of the heating roller **7** and the traveling speed of the endless belt **3** may be eliminated. In this embodiment, a cleaner **14** comprises a silicon pregnated cloth **16** wrapped over a shaft **15** which rotates in the direction indicated by the arrow, thereby cleaning the surface of the heating roller **7**.

FIG. **3** shows another alternate embodiment of the present invention in which the tension roller **21** is pressed against the outer surface of the endless belt **3** as shown. When the recording medium **1**, bearing toner images **2** thereupon is fed to the heating roller **7**, the tension roller **21** is displaced to a position indicated by the solid lines so that the endless belt **3** is wrapped as indicated by the solid lines for fixing the toner image **2**. On the other hand, when no recording medium is being fed, both the tension roller **21** and the endless belt **3** are displaced to the positions indicated by the dotted lines, **21'** and **3'**, so that the endless belt **3** is moved away from the heating roller **7**, whereby the service life of the endless belt **3** may be increased.

FIG. **4** shows a further alternate embodiment of the present invention in which auxiliary rollers **31** and **32** are disposed adjacent to the heating roller **7** as shown so that the recording medium **1** may be more effectively pressed against the heating roller **7**. That is, the central or contact angle A' is much increased as compared with the previously described embodiments. It should be noted that the contact or central angle A' may be suitably adjusted by selecting the positions of the auxiliary rollers **31** and **32**.

FIGS. **5** and **6** show an alternate embodiment of the present invention, especially directed to the improvement of the heating roller **7**. An electrically conductive layer **7*b*** is formed around a cylindrical tube **7*a*** made of a heat resisting quartz glass by, for example, applying a NESA glass. A heat resisting and nonadhesive outer layer **7*c*** is applied upon the conductive layer **7*b***. The heating roller **7'** is therefore translucent as a whole. The heating means **6** of the roller described hereinabove is incorporated in the heating roller **7'**. A terminal (not shown) is so arranged as to contact with the conductive layer **7*b*** so that it is preheated to a temperature between 60° C and 90° C by the Joule's heat when the conductive layer **7*b*** is energized.

When the heating roller **7'** of this embodiment is employed, the mode of operation is as follows. When the recording medium **1** is not fed, the heating roller **7'** is preheated to a temperature between 60° C and 90° C while the heating means **6** remains deenergized. When the recording medium **1** is fed into the fixing device the heating means **6** is energized so that the surface temperature may be immediately raised to 130° C to 170° C for fixing the toner images **2**, whereby the fixing may be accomplished at high speed. Therefore, the heating means **6** is not required to be kept energized all the time so that an undesired temperature rise in other parts of the copying machine may be prevented. Furthermore, the recording medium **1** may be readily separated from the heating roller **7'** because of the provision of the nonadhesive type outer layer **7*c***.

We claim:

1. A fixing device for heat fixing toner images on recording media fed thereto comprising a cylindrical heating roller; heating means incorporated in said heating roller; a nonadhesive and heat-resisting first layer on the peripheral surface of said heating roller; an electrically conductive second layer interposed between said first layer and the surface of said heating roller; a heat-resisting endless belt having a low thermal conductivity; a pair of spaced apart driving and driven rollers upon which said endless belt is mounted in such a manner that when said endless belt is driven it may be wrapped over a part of said peripheral surface of said heating roller; means for driving said heating roller at a speed equal to the traveling speed of said endless belt, such that toner images upon a recording medium transported by said endless belt may be fixed when brought into surface contact with said heating roller.

2. A fixing device according to claim **1** comprising a tension roller movable between two positions for engaging said endless belt and arranged opposite said heating roller so that in one position the endless belt is moved toward said heating roller to wrap around a part of the periphery thereof for fixing and so that in the other position said endless belt is moved away from said heating roller when no record medium is being fixed.

3. A fixing device according to claim **1** comprising a pair of spaced-apart auxiliary rollers arranged adjacent the periphery of said cylindrical heating roller for pressing said endless belt against said periphery, said auxiliary rollers being positioned with respect to said periphery such that said endless belt is wrapped around a selected part of the periphery of said cylindrical heating roller.

4. A device as in claim **1**, wherein the electrically conductive layer is NESA glass.

5. A device as in claim **1**, wherein said nonadhesive heat-resisting layer is a fluorinated resin.

6. Device for heat fixing toner images on recording sheets fed thereto, comprising:

a. a rotatable heating roller comprising:
   i. a tubular member;
   ii. a layer of electrically conductive material on the outer surface of said tubular member;
   iii. a layer of heat-resistant nonadhesive synthetic resin on said electrically conductive material forming the peripheral surface of said heating roller;
   iv. a heating means within said tubular member;
b. means for rotating said roller at a selected speed;
c. an endless belt engaging a portion of the peripheral surface of said heating roller for feeding recording sheets containing toner images thereto; and
d. a pair of rotatable spaced rollers on which said endless belt rides, said spaced rollers being arranged on either side of said heating roller such that the belt engages an extended portion of the peripheral surface of said heating roller, one of said spaced rollers driving said endless belt at the selected speed of said heating roller.

7. A device as in claim **6**, wherein said tubular member is quartz, said electrically conductive material is NESA glass and said resin is translucent, such that the heating roller is translucent as a whole.

8. A device as in claim **6**, including means for preheating the electrically conductive material to a temperature between 60° C. and 90° C.

9. A device as in claim **6**, including means for deenergizing said heating means when not fixing a toner image.

* * * * *