(12) INTERNATIONAL APPLICATION PUBLISHED UNDER THE PATENT COOPERATION TREATY (PCT)

(19) World Intellectual Property Organization
International Bureau

(43) International Publication Date
24 April 2008 (24.04.2008)

PCT

(10) International Publication Number
WO 2008/046158 Al

(51) International Patent Classification:
F26B 3/00 (2006.01) *F26B 23/10* (2006.01)
F26B 17/16 (2006.01)

(21) International Application Number:
PCT/AU2007/001596

(22) International Filing Date: 19 October 2007 (19.10.2007)

(25) Filing Language: English

(26) Publication Language: English

(30) Priority Data:
2006905844 20 October 2006 (20.10.2006) AU

(71) Applicant *(for all designated States except US):* **GREEN GLOBAL TECHNOLOGIES PTY LTD** [AU/AU]; 2/7 Olympic Circuit, Southport, Queensland 4215 (AU).

(72) Inventor; and
(75) Inventor/Applicant *(for US only):* **SHELTON, Lesley, John, Thomas** [AU/AU]; 5 Catherine Street, Morwell, Victoria 3840 (AU).

(74) Agent: **CULLEN** & CO.; Level 26, 239 George Street, Brisbane, QLD 4000 (AU).

(81) Designated States *(unless otherwise indicated, for every kind of national protection available):* AE, AG, AL, AM, AT, AU, AZ, BA, BB, BG, BH, BR, BW, BY, BZ, CA, CH, CN, CO, CR, CU, CZ, DE, DK, DM, DO, DZ, EC, EE, EG, ES, FI, GB, GD, GE, GH, GM, GT, HN, HR, HU, ID, IL, IN, IS, JP, KE, KG, KM, KN, KP, KR, KZ, LA, LC, LK, LR, LS, LT, LU, LY, MA, MD, ME, MG, MK, MN, MW, MX, MY, MZ, NA, NG, NI, NO, NZ, OM, PG, PH, PL, PT, RO, RS, RU, SC, SD, SE, SG, SK, SL, SM, SV, SY, TJ, TM, TN, TR, TT, TZ, UA, UG, US, UZ, VC, VN, ZA, ZM, ZW

(84) Designated States *(unless otherwise indicated, for every kind of regional protection available):* ARIPO (BW, GH, GM, KE, LS, MW, MZ, NA, SD, SL, SZ, TZ, UG, ZM, ZW), Eurasian (AM, AZ, BY, KG, KZ, MD, RU, TJ, TM), European (AT, BE, BG, CH, CY, CZ, DE, DK, EE, ES, FI, FR, GB, GR, HU, IE, IS, IT, LT, LU, LV, MC, MT, NL, PL, PT, RO, SE, SI, SK, TR), OAPI (BF, BJ, CF, CG, CI, CM, GA, GN, GQ, GW, ML, MR, NE, SN, TD, TG).

Published:
— *with international search report*

(54) Title: DRYING APPARATUS

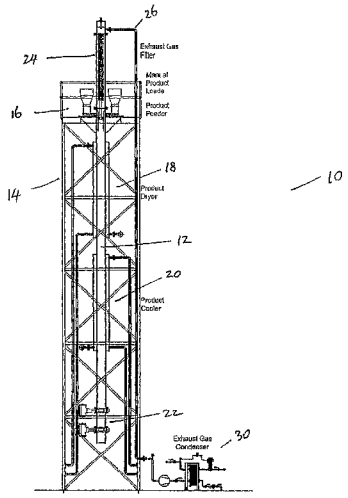

(57) Abstract: A drying apparatus (10) for drying a material comprises a vessel (12) having an inlet (38,40) for introducing the material to be dried and an outlet (22) for removing dried material therefrom, indirect heating means (18) for indirectly heating the material in the vessel, a vapour or gas outlet (26) for removing vapour or gas from the vessel and a separator (24) for separating entrained solids from the vapour or gas leaving the vessel. The vessel (12) is generally vertical, the inlet (38,40) for the material is located at an upper part of the vessel (12) and the outlet (26) for the dried material is located below the inlet and the vapour or gas outlet (26) is at an upper part of the vessel. The separator (24) is positioned above the inlet. When the separator is becoming close to fully loaded with separated solids, the drying apparatus may be operated such that the solids are dislodged or removed from the separator such that they fall down through the vessel and are recovered via the outlet.

WO 2008/046158 A1

DRYING APPARATUS

FIELD OF THE INVENTION

The present invention relates to a drying apparatus for drying material. The drying apparatus is particularly suitable for drying particulate material, especially fine granular material. The present invention also relates to a method for drying material.

BACKGROUND OF THE INVENTION

Drying apparatus, such as flash dryers, are frequently used to reduced the water content of materials, such as moist particulate materials. Such drying apparatus operates by heating the material to be dried in order to remove water therefrom. The material to be dried may be heated in the dryer by injecting combustion gases from a combustor or by injecting steam or by injecting hot air or by injecting hot gases. The hot gases or the steam contacts the material to be dried in the dryer. This results in direct heat exchange between the hot combustion gases or the steam and the material, thereby increasing the temperature of the material, which in turn causes drying.

Throughout this specification, the term "comprising" and its grammatical equivalents are to be taken to have an inclusive meaning unless the context of use clearly indicates otherwise.

The applicant does not concede that the prior art discussed in this specification forms part of the common general knowledge in Australia or elsewhere.

BRIEF DESCRIPTION OF THE INVENTION

It is in object of the present invention to provide an alternative drying apparatus.

hi a first aspect, the present invention provides a drying apparatus for drying a material comprising a vessel having an inlet for introducing the material to be dried and an outlet for removing dried material therefrom, indirect heating means for indirectly heating the material in the vessel, a vapour or gas outlet for removing vapour or gas from the vessel and a separator for separating entrained solids from the vapour or gas leaving the vessel.

In one embodiment, the drying apparatus further includes feeding means for feeding the material to be dried to the vessel.

The drying apparatus in accordance with the present invention will typically be used to dry particulate or granular solid material. Therefore, the feeding means suitably comprises any means known to be suitable for feeding particulate or granular solid material to a vessel. The feeding means may comprise, for example, one or more screw feeders, or one or more conveyors, or one or more extruders, or the like.

The drying apparatus in accordance with the present invention utilises indirect heat exchange to cause drying of the material. This has the advantage that an increased volume of vapour, steam or gas is not added to the vessel. Consequently, treatment of the vapour or gas stream leaving the vessel is simplified as the volume of the vapour or gas stream leaving the vessel is minimised.

The apparatus may include a drying section in which the bulk of drying of the material takes place. The drying section may include a jacket surrounding the vessel, with a hot or heated fluid being added to the jacket to thereby indirectly heat the interior of the vessel. The jacket may be a steam jacket. Alternatively, the jacket may receive hot combustion gases from a combustor or any other hot media, gas or liquid.

It will be appreciated that other indirect heat exchange means may also be used to heating the interior of the vessel. The indirect heat exchange means may extend around the exterior of the vessel. Alternatively, the indirect heat exchange means may extend into the interior volume of the vessel.

In some embodiments, the vessel may comprise a pipe. In other embodiments, the drying apparatus may comprise one or more vessels, such as one or more pipes.

The drying apparatus includes a separator for separating entrained solids from the vapour or gas leaving the vessel. In one embodiment, the separator comprises a filter. The filter is desirability a heat resistant filter that can withstand the elevated temperatures to which it is

likely to be exposed during operation of the drying apparatus. The filter may be a bag filter or a ceramic filter.

Other separators that are able to separate solids from gases may also be used in the present invention.

In one embodiment of the present invention, the vessel is a generally vertical vessel. In this embodiment, the inlet for the material may be located at an upper part of the vessel and the outlet for the dried material may be located below the inlet. The vapour or gas outlet may be at an upper part of the vessel. hi this embodiment, the material to be dried enters the vessel through the inlet in an upper part of the vessel. The material to be dried then falls downwardly through the vessel to the outlet. The vapour or gas generated in the vessel, which will typically include water vapour generated by drying of the material, passes upwardly through the vessel and leaves the vessel via the vapour outlet that is located in an upper part of the vessel.

hi embodiments where the vessel is a generally vertical vessel, it is desirable that the separator for separating entrained solids from the vapour leaving the vessel is positioned above the inlet. More desirability, the separator is positioned directly above the vessel, hi this embodiment, when the separator is becoming close to fully loaded with separated solids, the drying apparatus may be operated such that the solids are dislodged or removed from the separator such that they fall down through the vessel and are recovered via the outlet.

In this embodiment, the inlet for the material may surround the vapour outlet. The inlet for the material may be shielded or include a guide that promotes movement of the material down the vessel in close proximity to the wall of the vessel. The shield or guide may include an outwardly tapered portion or an outwardly sloping portion. As the material is fed into the vessel, it drops through the inlet and comes into contact with the outwardly tapered portion or outwardly sloping portion which, in turn, pushes the material towards the wall of the vessel.

The vapour or gas outlet may be defined by an open-ended body having closed side walls

that it is mounted within the vessel. The open-ended body may define a flow passage therethrough to thereby enable the vapour or gas to flow through the body. The inlet for the material to be dried may be defined by the flow passage between an inner wall of the vessel and the outer wall of the body.

The outlet for removing dried material from the vessel may comprise any suitable outlet for removing particulate or granular solid material from a vessel, hi one embodiment, the outlet includes a lock arrangement which has a first valve and a second valve spaced from the first valve. During use, the first valve will be open to allow the material to pass therethrough. The second valve will typically be closed in order to seal the vessel from the tee exterior. When the space between the valves is almost full, the first valve is closed and the second valve is opened to allow the dried material to be removed through the second valve. As the first valve is closed at this stage, the interior of the vessel remains sealed from the exterior environment. Inertization gases may be introduced into this part of the apparatus. This operation will be while understood to a person skilled in the art.

hi one embodiment, the drying apparatus may include a drying section and a cooling section downstream from the drying section, hi the cooling section, the dried material is cooled. This enables easier handling of the dried material and also allows for recovery of waste heat from the dried material. The heat recovered in the cooling section may be used to preheat the material that is being sent to the drying apparatus for drying.

The cooling section may comprise a jacket surrounding the vessel, with a heat exchange fluid flowing through the jacket to thereby recover heat from the dried material in the interior of the vessel. The heat exchange fluid may comprise a liquid or gas. Other heat exchange media may also be used (such as flowable particulate material). Water may be used as a suitable heat exchange fluid. The heat exchange fluid recovered from the cooling section may be used to preheat the material that is to be fed to the dryer.

Alternatively, material to be dried may pass through the cooling section prior to being fed into the vessel, hi this fashion, the material to be dried is preheated.

The present invention also relates to a method for drying material.

Accordingly, in a second aspect, the present invention provides a method of drying a material comprising feeding the material to a drying apparatus, the drying apparatus including a vessel that is heated by indirect heat exchange, passing the material through the vessel such that the material is heated by indirect heat exchange to thereby cause moisture in the material to evaporate, removing dried material from the vessel and removing vapour from the vessel.

In one embodiment, the method further includes separating entrained solids from the vapour.

The entrained solids may be removed from the vapour by subjecting the vapour stream leaving the vessel to a solids separation step. For example, the vapour stream may be passed through a filter to remove entrained solids therefrom.

hi one embodiment, the method comprises providing a generally vertical vessel, feeding material to be dried to an inlet positioned at an upper part of the vessel such that the material falls downwardly through the vessel, causing evaporation of moisture from the material whereby vapour generated in the vessel rises upwardly through the vessel and passes through a vapour outlet and into a separator located above the inlet, separating entrained solids from the vapour in the separator, and removing dried material from an outlet located below the inlet, wherein solids separated from the vapour in the separator are recovered through the outlet of the vessel.

Other embodiments of the method in accordance with the present invention may be as described with reference to operation of the drying apparatus described with reference to the first aspect of the invention.

The drying apparatus in accordance with the present invention is suitably a flash dryer. Similarly, the drying method in accordance with the present invention may comprise a flash drying method.

The apparatus and method in accordance with the present invention may be used to dry particular material, such as coal (including lignite), sand, minerals, etc.

BRIEF DESCRIPTION OF THE DRAWINGS

Figure 1 shows a side schematic view of the drying apparatus in accordance with one embodiment of the present invention;

Figure 2 shows a side a view of the upper part of the drying apparatus shown in figure 1;

Figure 3 shows a side view of the drying section of the apparatus shown in figure 1;

Figure 4 shows a side view of the cooling section of the apparatus shown in figure 1; and

Figure 5 shows a side view of the bottom section of the drying apparatus shown in figure 1.

DETAILED DESCRIPTION OF THE DRAWINGS

It will be appreciated that the drawings accompany this specification have been provided for the purposes of illustrating an embodiment of the present invention. Thus, it will be understood that the invention should not be considered to be limited solely to the features as shown in the attached drawings.

The drying apparatus 10, as shown in figure 1, comprises a vessel in the form of a pipe 12. Pipe 12 it is positioned such that it is in a generally vertical orientation. A support structure 14 (or another similar framework) is used to support pipe 12.

The pipe 12 includes a material feeder 16. As shown in figure 1, material feeder 16 is located at an upper part of pipe 12. The drying apparatus 10 includes a drying section 18 and a cooling section 20. The lower part of pipe 12 is provided with an outlet 22 for removing dried material from the pipe.

Positioned above the material feeder 16 is a separator 24. An exhaust gas line 26 is used for removing exhaust gas or vapour from the separator 24.

Finally, the apparatus 10 shown in figure 1 also includes an exhaust gas condenser 30 for condensing water vapour from the exhaust gas leaving the drying apparatus 10.

Figures 2 to 5 show various views of parts of the drying apparatus 10 shown in figure 1. Figures 2 to 5 show an enlarged scale, when compared with figure 1, so that the various features of the embodiment of the drying apparatus 10 shown in figure 1 can be described with greater clarity.

Referring initially to figure 2, which shows the upper part of the drying apparatus 10 in greater detail, it can be seen that the material feeder 16 includes hoppers 32, 34. Hoppers 32, 34 are filled with the material that is to be dried. In the embodiment shown in the attached figures, hoppers 32, 34 manually filled. However, it will be appreciated that hoppers 32, 34 may be filled using conveyors or other automatically operated filling equipment. The hoppers 32, 34 may be provided with level sensors that can automatically sense the level of material in the hoppers and provide a control signal to replenish the hoppers with material when the level of material in the hoppers reaches a predetermined minimum level.

Although figure 2 shows two feed hoppers, it will be appreciated that a greater number or lesser number of feed hoppers maybe used.

Each of the feed hoppers 32, 34 has a screw feeder 36 positioned in a lower outlet thereof. Screw feeders 36 are used to move the material to be dried from the bottom of the feed hoppers into the pipe 12. In this regard, pipe 12 has openings 38, 40 formed in the side thereof. The screw feeders 36 open into respective openings 38, 42 thereby enabling the material to drop into the pipe 12. Thus, the openings 38, 40 represent inlets that allow the material that is to be dried in the drying apparatus 10 to be fed into the pipe 12.

Figure 2 also shows the separator 24. As can be seen, separator 24 is positioned above the inlet 38, 40. The separator 24 is carried within a further pipe section 15 that is joined via conventional pipe joints 42 to pipe 12. The upper end of pipe section 15 has further pipe

joints 44 that unable and end pipe 46 to be joined thereto.

The separator 24 comprises a filter 48. At its upper end, filter 48 is provided with a flange 50 that is used to mount the filter 48 within pipe section 15. Flange 50 also prevents vapour from leaving the pipe section 15 without having first passed through the filter 48.

An exhaust pipe 52 is connected to the upper end of pipe section 15. The exhaust pipe 52 is used to remove vapour from the drying apparatus 10.

At the lower end of pipe section 15, a shield or guide 54 is provided. Shield or guide 54 is mounted via pipe joint 42. The shield or guide 54 comprises a hollow body having open ends and closed side walls. Thus, shield or guide 54 allows vapour or gas to flow therethrough. Accordingly, shield or guide 54 may be considered to define a vapour or gas outlet from pipe 12.

As can be seen from figure 2, the material that is fed into pipe 12 through inlets 38, 40 flows down through a flow passage defined between the inner wall of pipe 12 and the outer wall of shield or guide 54.

The lower end of shield or guide 54 is shown in figure 3. As can be seen from figure 3, the lower end 56 of shield or guide 54 includes an outwardly tapered or an outwardly pointing section. This acts to divert particulate material falling past the shield or guide 54 outwardly towards of the wall of the pipe 12. This is desirable because the maximum heat transfer in the drying apparatus 10 occurs near the walls of the pipe 12 in the drying section 18.

As shown in figure 3, the drying section 18 includes a jacket 58 that surrounds pipe 12. Jacket 58 has a steam inlet 60 that is connected to a steam feed pipe 62 and a steam outlet 64 that is connected to a steam outlet pipe *66*. A condensate outlet 68 that is connected to a condensate pipe 70 is also provided in jacket 58. Steam is supplied to jacket 58 from a boiler or other heat source (not shown). This steam (or, in some embodiments, other heat carrying media) flows through jacket 58 and acts to indirectly exchange heat with the interior volume of the pipe 12 in the drying section 18. Due to the action of the shield or

guide 54 promoting the downward flow of material in close proximity to the wall of pipe 12, rapid heat exchange occurs with the material to be dried, which results in flash drying of the material. The vapour liberated from the flash drying process travels upwardly through the central portion of pipe 12, through the flow passage in shield or guide 54 into the upper pipe section 15.

The particulate material leaving the lower end of drying section 18 is largely dried. It will be appreciated that this material is quite hot. Due to the high temperature of this material, it may be difficult to handle if it was discharged from the drying apparatus 10 at that temperature. To accommodate this, the drying apparatus team is also provided with a cooling section 20. Cooling section 20 is shown in more detail in figure 4.

Cooling section 20 includes a jacket 80 that surrounds pipe 12. Jacket 80 includes a cooling media inlet 82 connected to a cooling media supply line 84. Jacket 82 also includes a cooling media outlet 86 that is connected to a cooling media outlet line 88. Cooling media, which may be water, is caused to flow through jacket 80 to indirectly extract heat from the hot dried material inside pipe 12. This results in an increase in temperature of the cooling media that flows through jacket 80. The hot cooling media recovered from jacket 80 may be used to pre-heat incoming feed material before it is fed to the feed hoppers.

Figure 5 shows details of the bottom section of the drying apparatus 10. The bottom section of pipe 12 is provided with a lock arrangement 90. Lock arrangement 90 includes a first valve 92 and a second valve 94. As can be seen, first valve 92 is longitudinally spaced from second valve 94. In operation, first valve 92 is normally open when a second valve 94 is closed. Dried material dropping down to pipe 12 passes through open first valve 92 and is trapped by closed second valve 94. When the space in the lock 90 is becoming close to filled with dried material, first valve 92 is closed and second valve 94 is opened. This allows the dried material in the lock 90 to flow out of the drying apparatus 10. It will be appreciated that the interior of the pipe 12 is largely sealed against the exterior at all times because one of valves 92 or 94 will typically be closed at all times.

When the filter 48 is fully loaded with particulate material, the supply of feed material to the

drying apparatus may be interrupted. The filter may then be treated, for example, by mechanical vibration, shaking or sub-sonic shock wave (or by other methods known to the person skilled in the art) to cause the captured particulate material to be dislodged from the filter. The dislodged particulate material falls down through the pipe 12 into the bottom section of the drying apparatus 90. This particulate material may thereafter be removed via the outlet.

In practice, the drying apparatus 10 shown in figures 1 to 5 is operated in a non-continuous or batch fashion. When the filter requires cleaning, the drying apparatus 10 is operated so that feed material supply to the drying apparatus is temporarily ceased. This allows the filter to be cleaned and the captured fines to be removed from the filter and recovered. The person skilled in the art will understand that one or more further dryers that are generally identical to the dryer 10 shown in figures 1 to 5 may be provided such that when the supply of feed material to one of the dryers is interrupted for filter cleaning, drying operations may continue in another of the dryers.

The apparatus shown in figures 1 to 5 provides indirect flash drying apparatus that has many advantageous features. In particular, the apparatus is quite compact and has a small footprint. Capital costs are minimised. The apparatus utilises indirect heating and as a result of the volume of vapour and off gases leaving the dryer are minimised. This simplifies treatment of the off gases. The apparatus provides for simplified recovery of dried fines material as well as condensed liquids, usually water, that is evaporated from the feed material.

Those skilled in the art will appreciate that the invention described herein may be susceptible to variations and modifications other than those specifically described. It will be understood that the present invention encompasses all such variations and modifications that fall within its spirit and scope.

CLAIMS

1. A drying apparatus for drying a material comprising a vessel having an inlet for introducing the material to be dried and an outlet for removing dried material therefrom, indirect heating means for indirectly heating the material in the vessel, a vapour or gas outlet for removing vapour or gas from the vessel and a separator for separating entrained solids from the vapour or gas leaving the vessel.

2. A drying apparatus as claimed in claim 1 further including feeding means for feeding the material to be dried to the vessel.

3. A drying apparatus as claimed in claim 1 or claim 2 wherein the the indirect heat exchange means extends around the exterior of the vessel or extends into the interior volume of the vessel.

4. A drying apparatus as claimed in claim 1 or claim 2 wherein the apparatus includes a jacket surrounding the vessel, with a hot or heated fluid being added to the jacket to thereby indirectly heat the interior of the vessel.

5. A drying apparatus as claimed in any one of the preceding claims wherein the separator comprises a filter.

6. A drying apparatus as claimed in any one of the preceding claims wherein the vessel is a generally vertical vessel, the inlet for the material is located at an upper part of the vessel and the outlet for the dried material is located below the inlet and the vapour or gas outlet is at an upper part of the vessel.

7. A drying apparatus as claimed in claim 6 wherein the separator for separating entrained solids from the vapour leaving the vessel is positioned above the inlet.

8. A drying apparatus as claimed in claim 6 wherein the separator is positioned directly above the vessel.

9. A drying apparatus as claimed in claim 8 wherein the inlet for the material surrounds the vapour outlet.

10. A drying apparatus as claimed in claim 9 wherein the inlet for the material is shielded or include a guide that promotes movement of the material down the vessel in close proximity to the wall of the vessel.

11. A drying apparatus as claimed in claim 19 wherein the shield or guide includes an outwardly tapered portion or an outwardly sloping portion such that as the material is fed into the vessel, it drops through the inlet and comes into contact with the outwardly tapered portion or outwardly sloping portion which, in turn, pushes the material towards the wall of the vessel.

12. A drying apparatus as claimed in any one of the preceding claims wherein the vapour or gas outlet is defined by an open-ended body having closed side walls that it is mounted within the vessel, the open-ended body defining a flow passage therethrough to thereby enable the vapour or gas to flow through the body and the inlet for the material to be dried is defined by a flow passage between an inner wall of the vessel and the outer wall of the body.

13. A drying apparatus as claimed in any one of the preceding claims wherein the outlet for removing dried material from the vessel includes a lock arrangement which has a first valve and a second valve spaced from the first valve.

14. A drying apparatus as claimed in any one of the preceding claims wherein the drying apparatus includes a drying section and a cooling section downstream from the drying section, the dried material being cooled in the cooling section.

15. A method of drying a material comprising feeding the material to a drying apparatus, the drying apparatus including a vessel that is heated by indirect heat exchange, passing the material through the vessel such that the material is heated by indirect heat exchange to thereby cause moisture in the material to evaporate, removing dried material from the vessel

and removing vapour from the vessel.

16. A method as claimed in claim 15 wherein the method comprises providing a generally vertical vessel, feeding material to be dried to an inlet positioned at an upper part of the vessel such that the material falls downwardly through the vessel, causing evaporation of moisture from the material whereby vapour generated in the vessel rises upwardly through the vessel and passes through a vapour outlet and into a separator located above the inlet, separating entrained solids from the vapour in the separator, and removing dried material from an outlet located below the inlet, wherein solids separated from the vapour in the separator are recovered through the outlet of the vessel.

17. A method as claimed in claim 16 wherein the separator for separating entrained solids from the vapour leaving the vessel is positioned above the inlet such that when the separator is becoming close to fully loaded with separated solids, the drying apparatus is operated such that the solids are dislodged or removed from the separator such that they fall down through the vessel and are recovered via the outlet.

18. A method as claimed in claim 17 wherein the dryer is a flash dryer.

19. A drying apparatus as claimed in any one of claims 1 to 14 wherein the drying apparatus is a flash dryer.

FIGURE 1

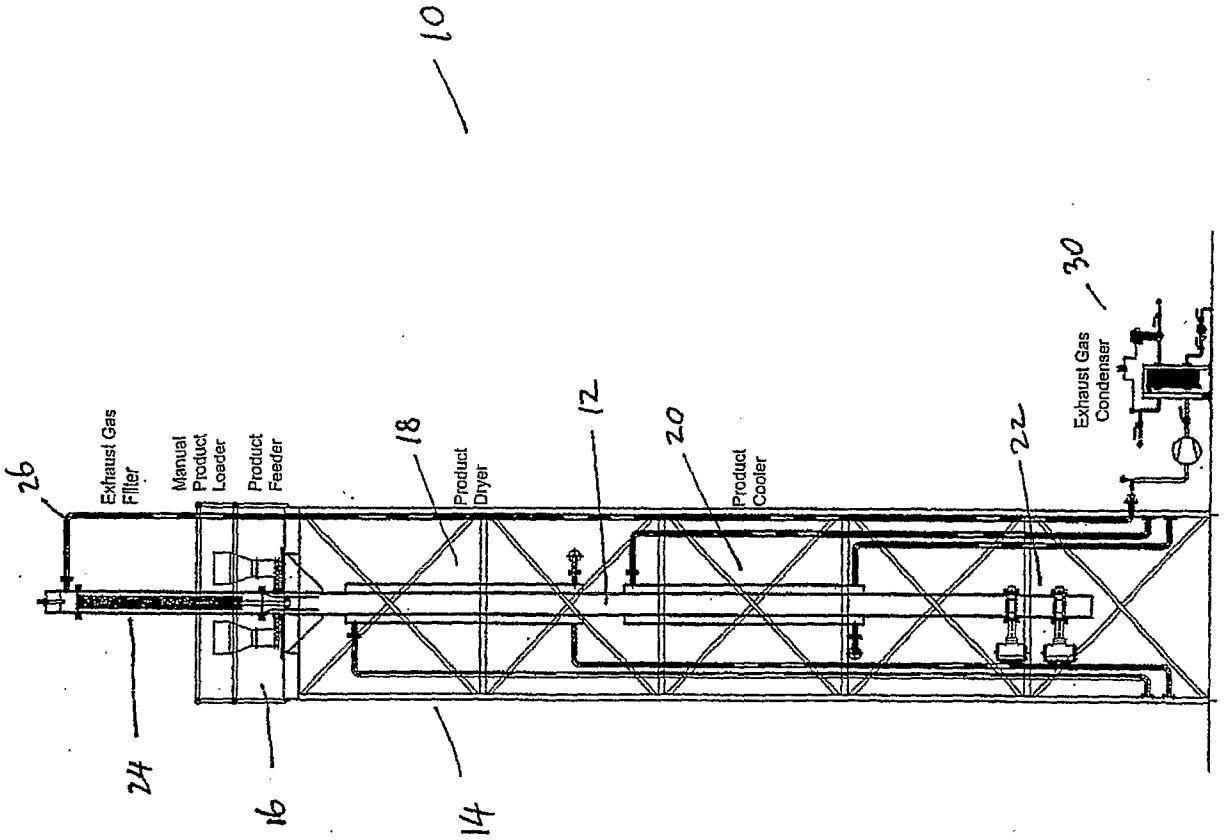
10
26
Exhaust Gas Filter
Manual Product Loader
Product Feeder
18
Product Dryer
12
20
Product Cooler
22
Exhaust Gas Condenser
30
24
16
14

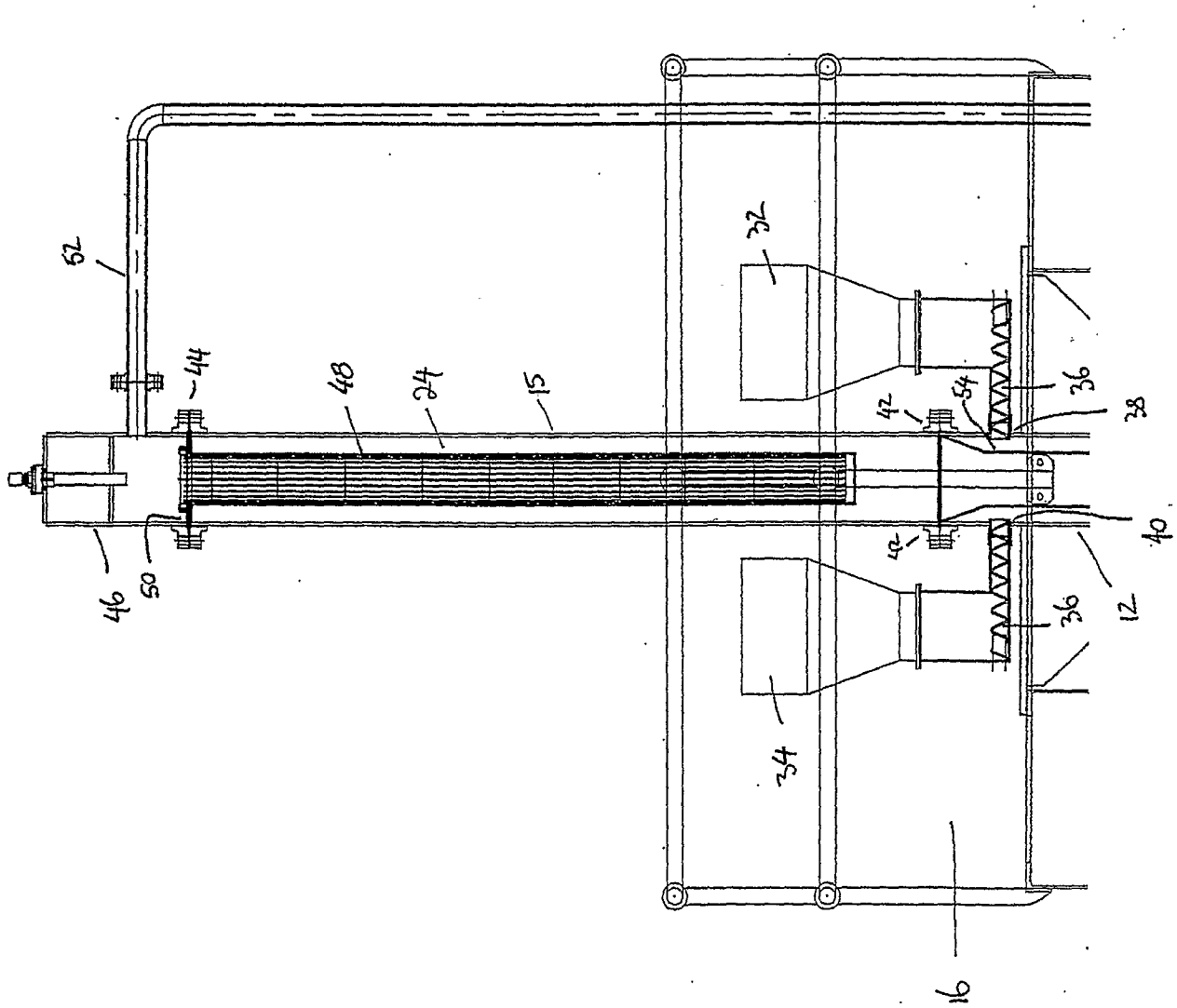

FIGURE 2

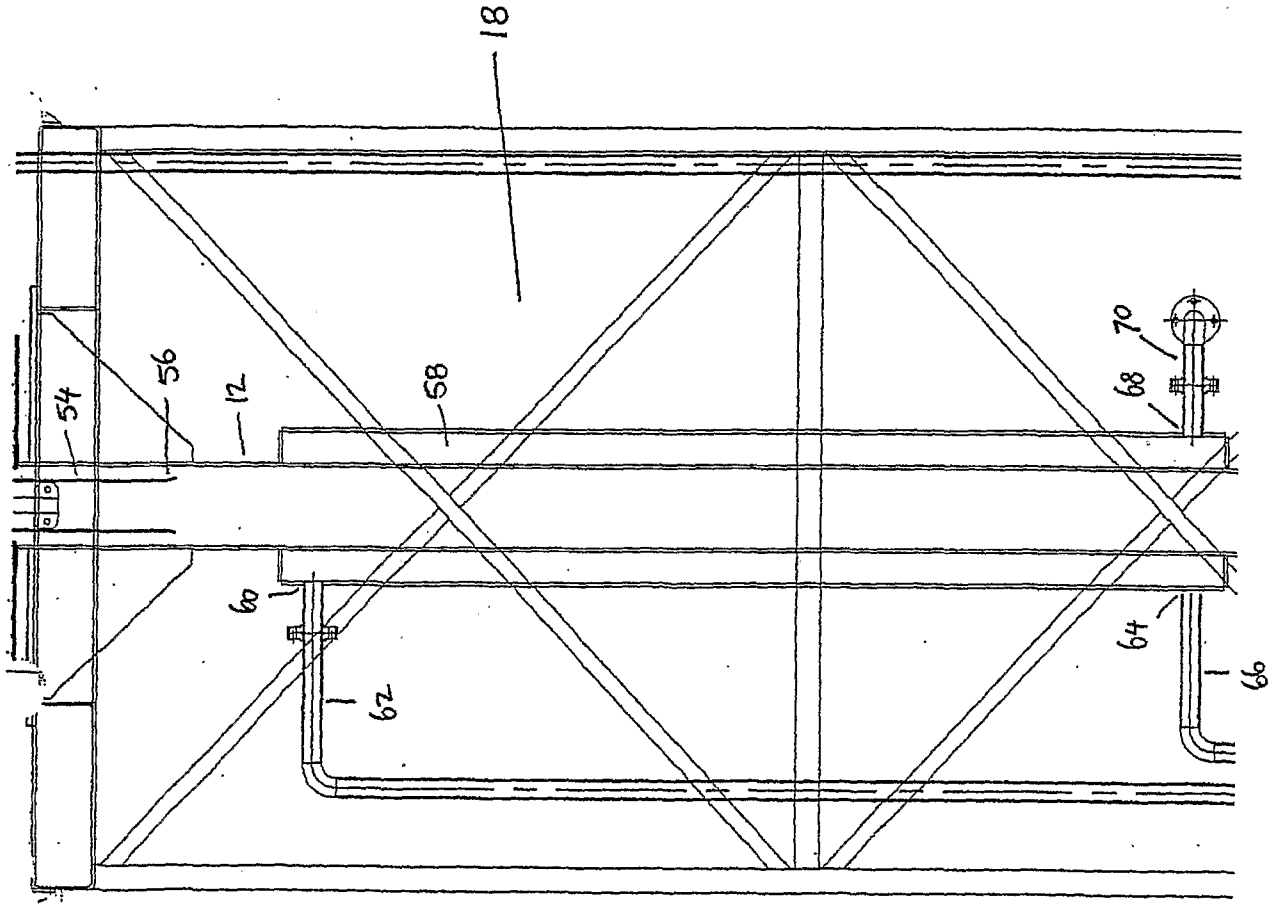

FIGURE 3

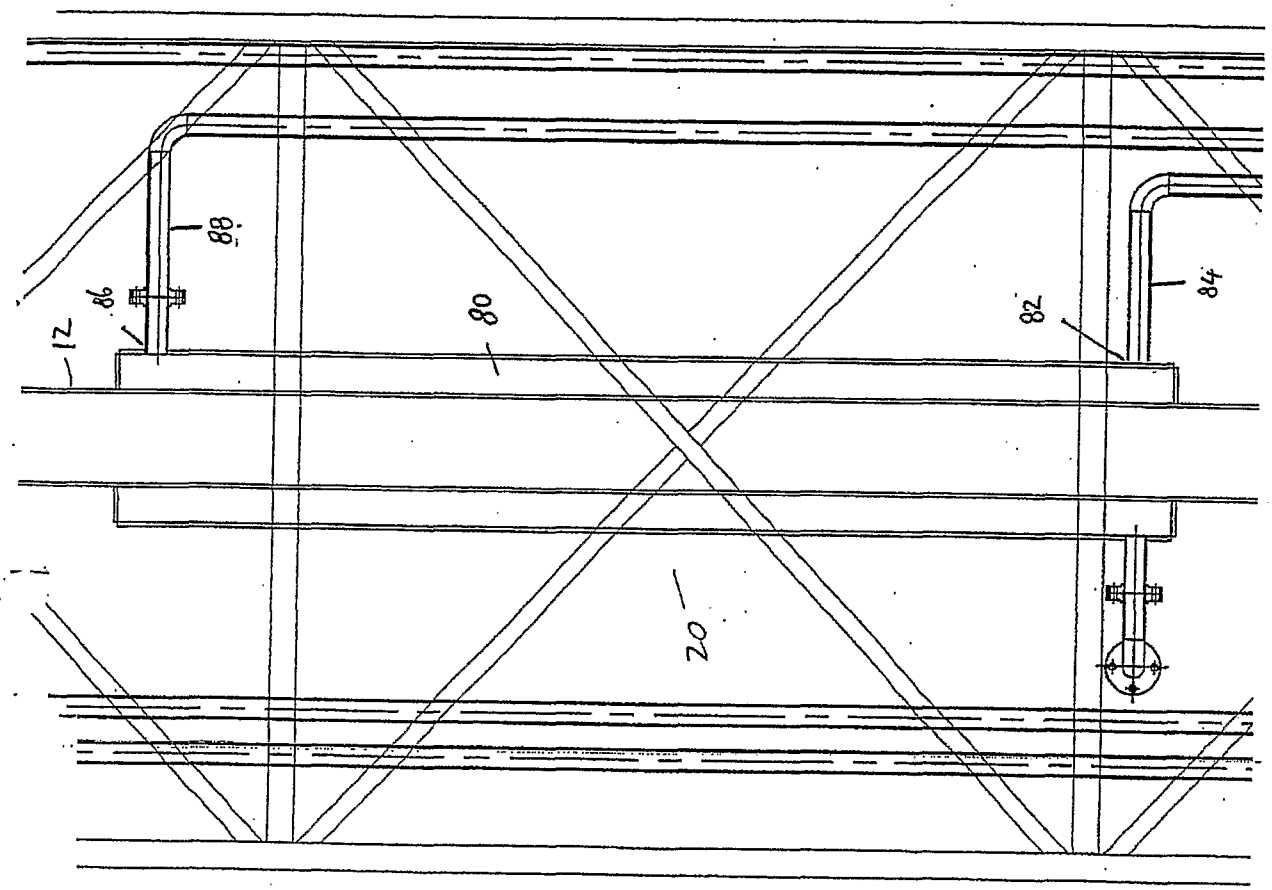

FIGURE 4

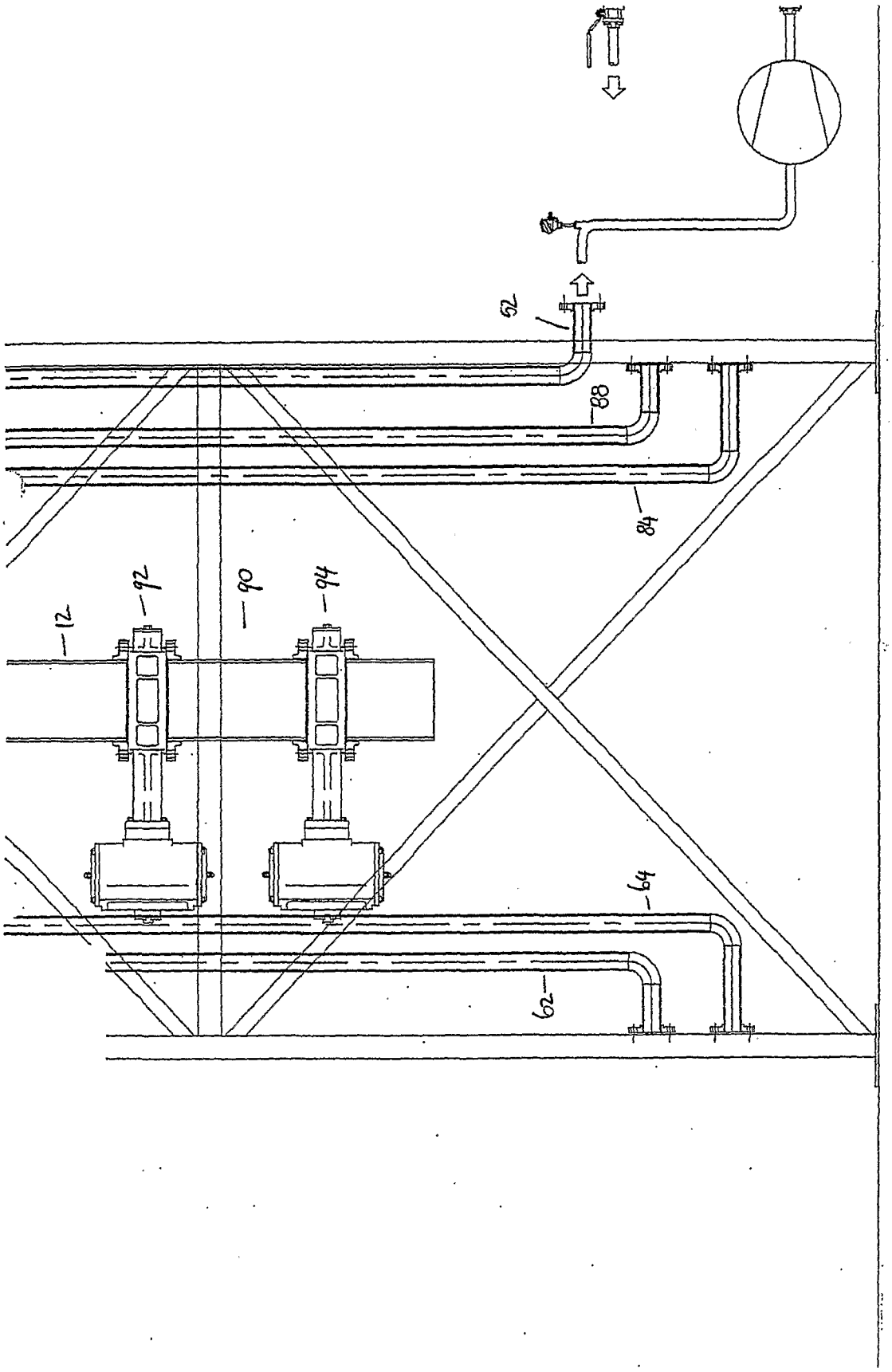

FIGURE 5

INTERNATIONAL SEARCH REPORT

International application No.
PCT/AU2007/001596

A. CLASSIFICATION OF SUBJECT MATTER

Int. Cl.

F26B 3/00 *(2006.01)* *F26B 17/16(2006.01)* *F26B 23/10(2006.01)*

According to International Patent Classification (IPC) or to both national classification and IPC

B FIELDS SEARCHED

Minimum documentation searched (classification system followed by classification symbols)

Documentation searched other than minimum documentation to the extent that such documents are included in the fields searched

Electronic data base consulted during the international search (name of data base and, where practicable, search terms used)
DERWENT: IPC - F26B/IC & Keywords - 'indirect heat+'

C DOCUMENTS CONSIDERED TO BE RELEVANT

Category*	Citation of document, with indication, where appropriate, of the relevant passages	Relevant to claim No
X	WO 2005/019749 A (MANUFACTURING AND TECHNOLOGY CONVERSION INTERNATIONAL, INC) 3 March 2005 Whole document	1, 2, 5, 14, 15
X	Derwent Abstract Accession No 91-000311/01, Class Q73, Q76 DD 281237 A (ORGREB INST KRAFTW) 1 August 1990 Abstract & Figures	1, 2, 5, 6, 7, 15, 16
X	US 5291668 A (BECKER ET AL) 8 March 1994 Whole document	1-4, 15

[x] Further documents are listed in the continuation of Box C \XJ See Patent family annex

• Special categories of cited documents

"A" document defining the general state of the art which is not considered to be of particular relevance

"E' earlier application or patent but published on or after the international filing date

"L" document which may throw doubts on priority claim(s) or which is cited to establish the publication date of another citation or other special reason (as specified)

"O" document referring to an oral disclosure, use, exhibition or other means

"P" document published prior to the international filing date but later than the priority date claimed

"T" later document published after the international filing date or priority date and not in conflict with the application but cited to understand the principle or theory underlying the invention

"X" document of particular relevance, the claimed invention cannot be considered novel or cannot be considered to involve an inventive step when the document is taken alone

'Y" document of particular relevance, the claimed invention cannot be considered to involve an inventive step when the document is combined with one or more other such documents, such combination being obvious to a person skilled in the art

"&" document member of the same patent family

Date of the actual completion of the international search
17 December 2007

Date of mailing of the international search report
24 DEC 2007

Name and mailing address of the 1SA/AU

AUSTRALIAN PATENT OFFICE
PO BOX 200, WODEN ACT 2606, AUSTRALIA
E-mail address pct@ipaustraha gov au
Facsimile No +61 2 6283 7999

Authorized officer
Tharu Fernando
AUSTRALIAN PATENT OFFICE
(ISO 9001 Quality Certified Service)
Telephone No (02) 6283 2486

INTERNATIONAL SEARCH REPORT

International application No.
PCT/AU2007/001596

C (Continuation). DOCUMENTS CONSIDERED TO BE RELEVANT

Category*	Citation of document, with indication, where appropriate, of the relevant passages	Relevant to claim No.
X	US 445 1231 A (MURRAY) 29 May 1984 Whole document	1, 3, 5, 15
X	US 4295281 A (POTTER) 20 October 1981 Whole document	1, 2, 5, 15
X	US 4043049 A (HEDSTROM) 23 August 1977 Whole document	1, 15, 18, 19

INTERNATIONAL SEARCH REPORT

Information on patent family members

International application No.

PCT/AU2007/001596

This Annex lists the known "A" publication level patent family members relating to the patent documents cited in the above-mentioned international search report. The Australian Patent Office is in no way liable for these particulars which are merely given for the purpose of information.

Patent Document Cited in Search Report		Patent Family Member					
WO	2005019749	US	2005050759				
DD	281237	NONE					
US	5291668	NONE					
us	4451231	NONE					
us	4295281	AU	14046/83	**AU**	42969/78	AU	51500/85
		CA	1103445	**DD**	142086	DE	2901723
		FR	2417067	**GB**	2014288	PL	213290
us	4043049	AT	218975	**BR**	7501637	DE	2512162
		FI	750793	FR	2264915	JP	50132201
		NO	750974	SE	7403903	SU	934914
		ZA	7501597				

Due to data integration issues this family listing may not include 10 digit Australian applications filed since May 2001.

END OF ANNEX