US 20030040969A1

(19) United States

(12) Patent Application Publication (10) Pub. No.: US 2003/0040969 A1

O'Hagan et al. (43) Pub. Date: Feb. 27, 2003

(54) SHOPPING ASSISTANCE SOFTWARE FOR USE ON MOBILE COMPUTERS USED BY CUSTOMERS IN RETAIL ESTABLISHMENTS

(76) Inventors: **Timothy P. O'Hagan**, Akron, OH (US); **Gregory Canda**, Tallmadge, OH (US); **James E. Traxler**, Bay Village, OH (US)

Correspondence Address:
Daniel R. McGlynn
Symbol Technologies, Inc.
One Symbol Plaza
Holtsville, NY 11742 (US)

(21) Appl. No.: **10/209,811**

(22) Filed: **Aug. 1, 2002**

Related U.S. Application Data

(60) Division of application No. 09/861,836, filed on May 21, 2001, which is a continuation of application No. 08/921,235, filed on Aug. 29, 1997, now Pat. No. 6,314,406, which is a continuation-in-part of application No. 08/770,690, filed on Dec. 19, 1996, now Pat. No. 6,119,935, and which is a continuation-in-part of application No. 08/752,301, filed on Nov. 19, 1996, now abandoned, and which is a continuation-in-part of application No. 08/744,109, filed on Nov. 5, 1996, now Pat. No. 5,821,513, and which is a continuation-in-part of application No. 08/668,343, filed on Jun. 26, 1996, now Pat. No. 5,821,512.

Publication Classification

(51) **Int. Cl.**[7] **G06F 17/60**; G06G 1/12

(52) **U.S. Cl.** **705/21**; 705/10

(57) ABSTRACT

A system and method for an information system for use by customers in a retail shopping environment are provided. The system includes a host computer and a portable terminal for use by a customer. The portable terminal is located within a retail environment and interacts with the host computer to access product information. A customer enters a request for product information via an input device. The portable terminal then transmits the customer request and receives the product information from the host computer. A processor is employed for generating a request or query related to the received product information; and both the product information and additional query information is then displayed to the customer.

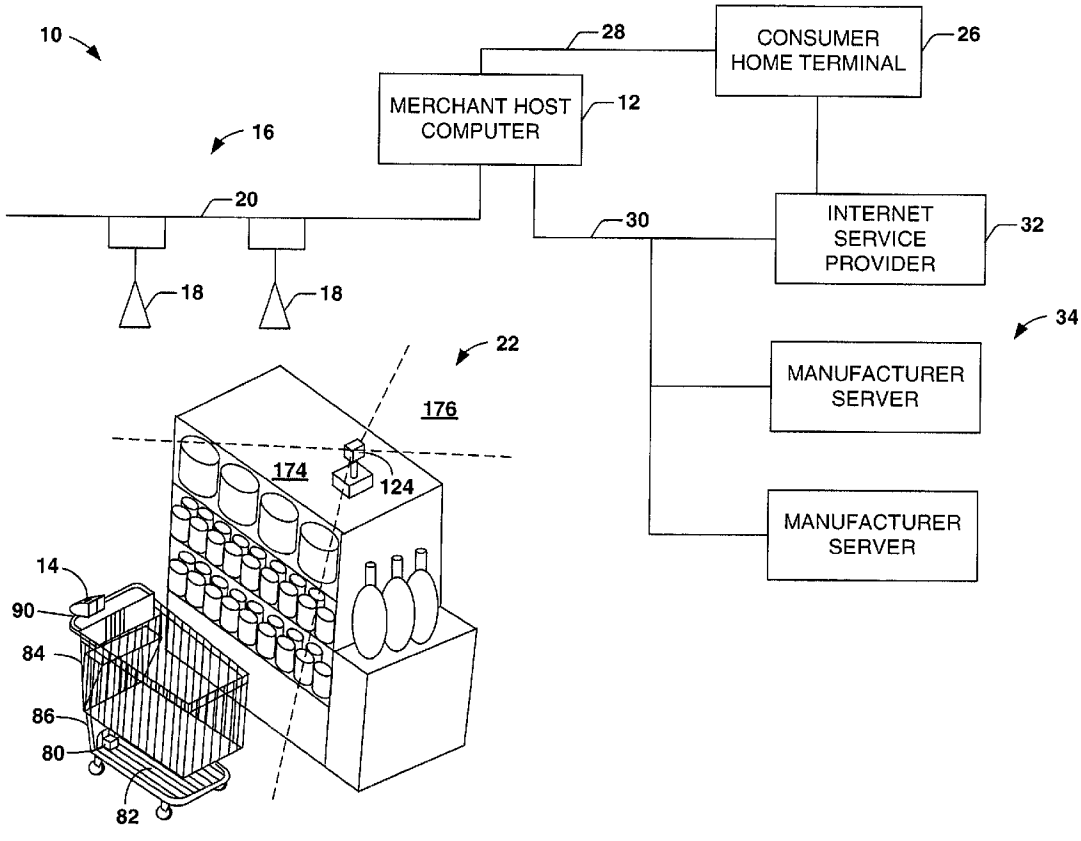

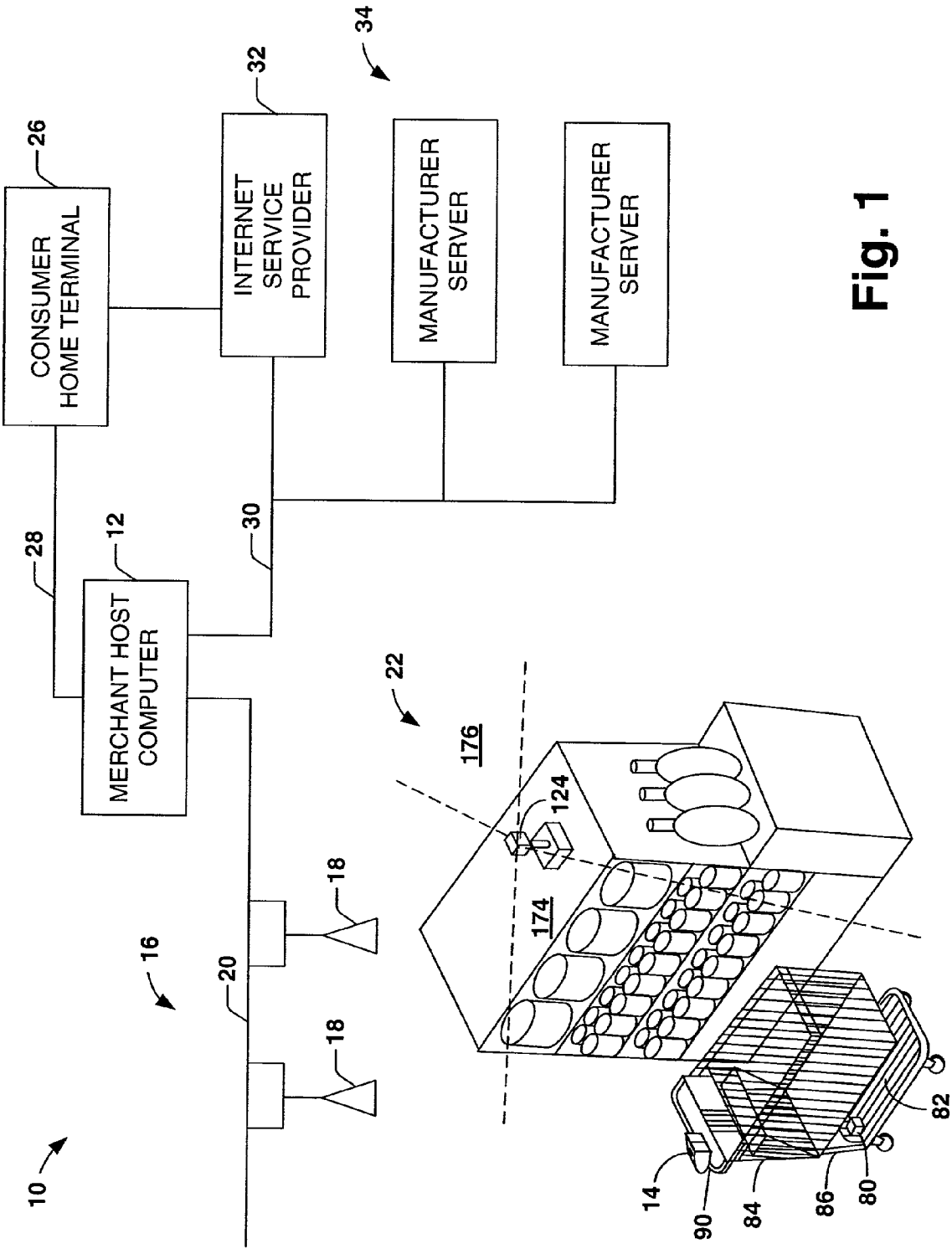
10
12
14
16
18
18
20
22
26
28
30
32
34
80
82
84
86
90
124
174
176
CONSUMER HOME TERMINAL
INTERNET SERVICE PROVIDER
MANUFACTURER SERVER
MANUFACTURER SERVER
MERCHANT HOST COMPUTER

Fig. 1

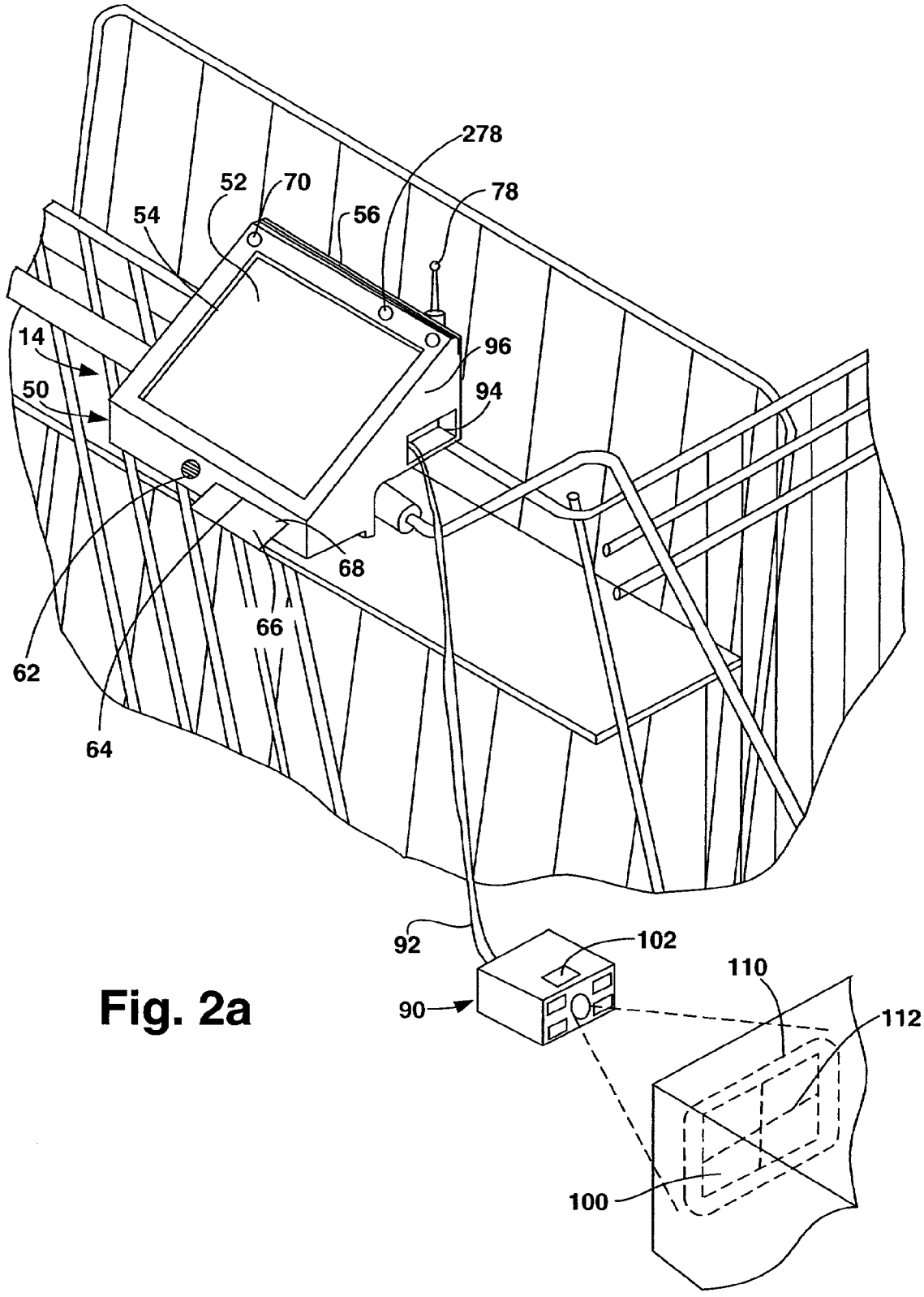

Fig. 2a

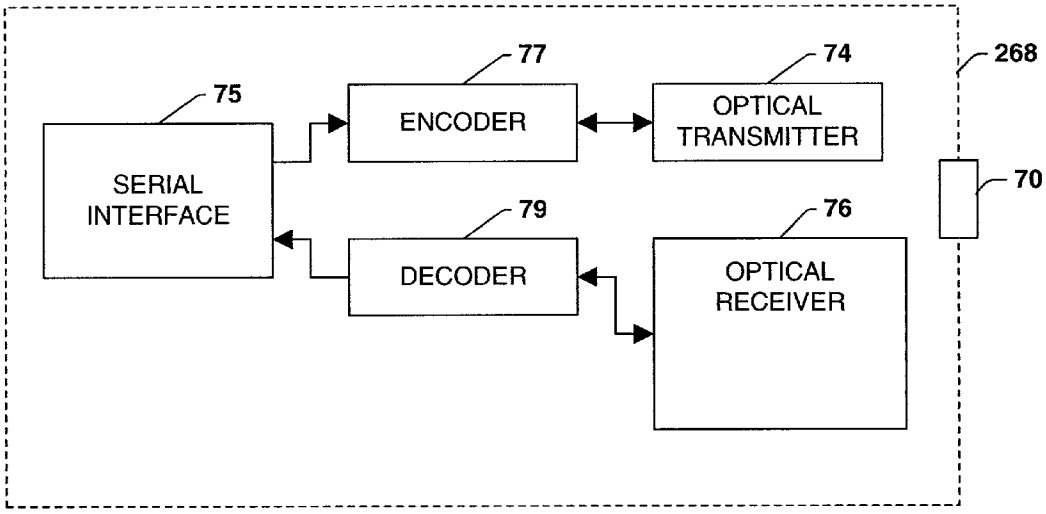
77
74
268
75
ENCODER
OPTICAL
TRANSMITTER
SERIAL
INTERFACE
70
79
76
DECODER
OPTICAL
RECEIVER

Fig. 2b

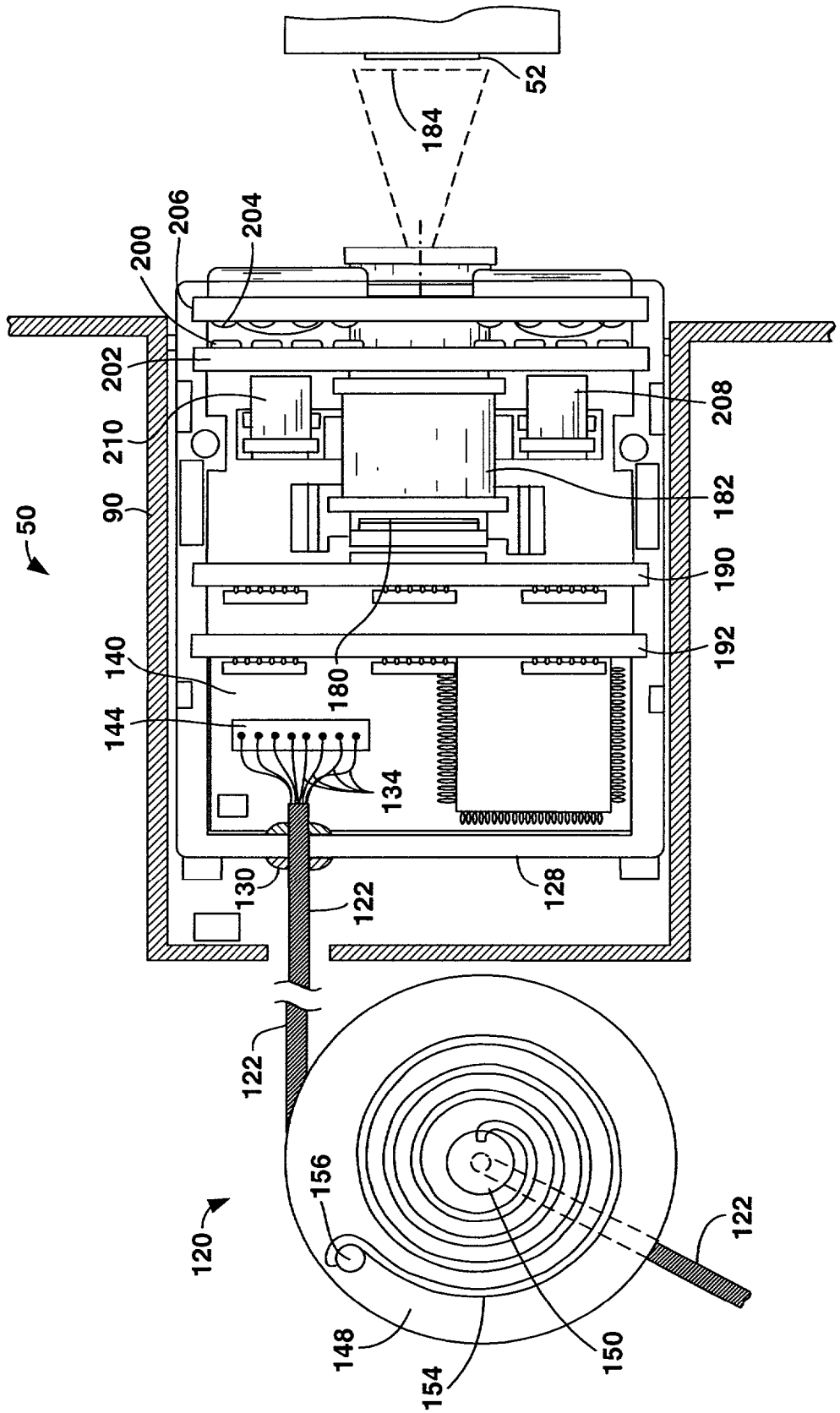
52
184
206
204
200
202
210
90
50
208
182
190
192
140
144
180
134
130
122
128
122
156
120
148
154
150
122

Fig. 3

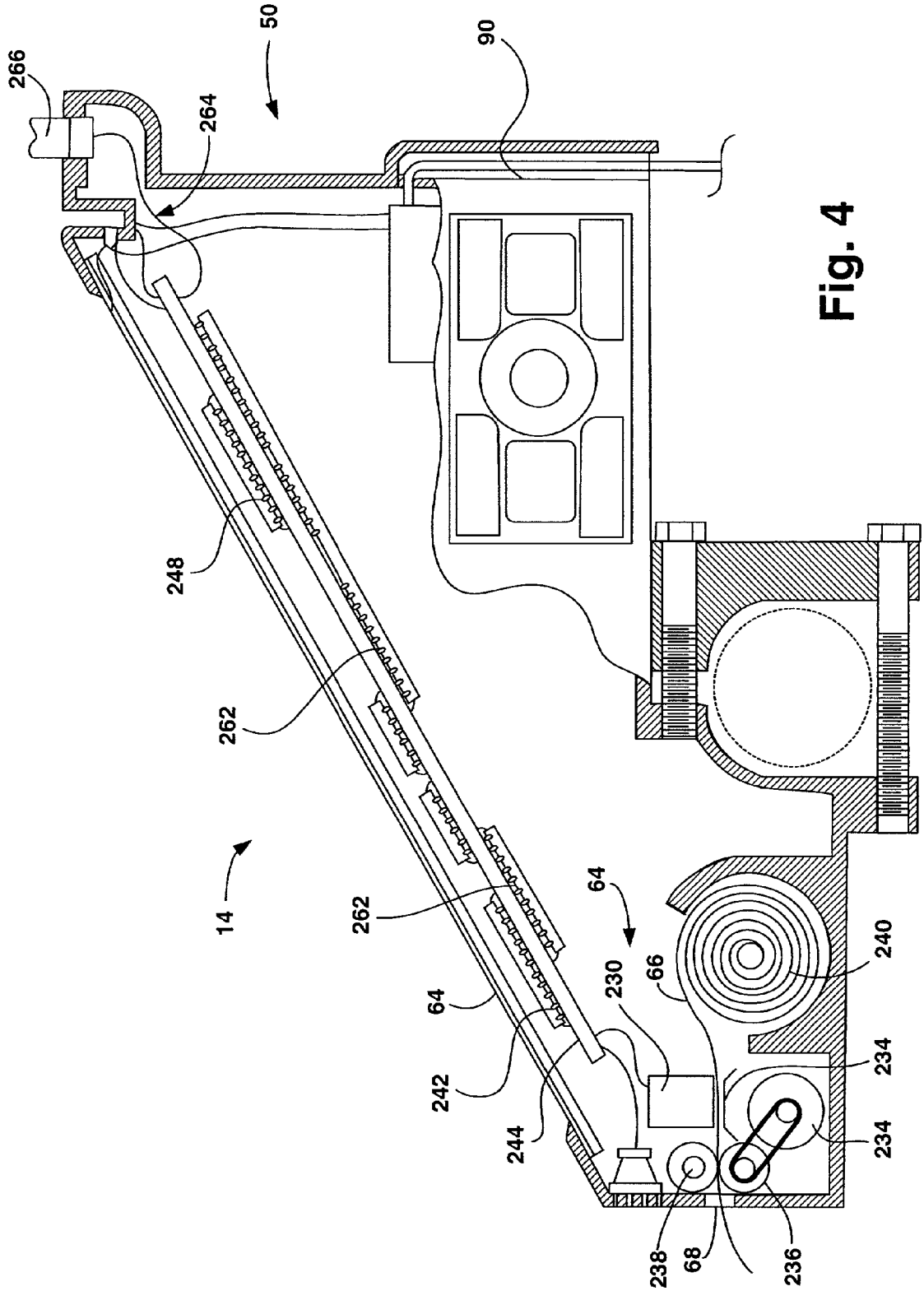
50
90
266
264
248
262
262
14
64
64
230
66
240
242
244
234
234
238
68
236

Fig. 4

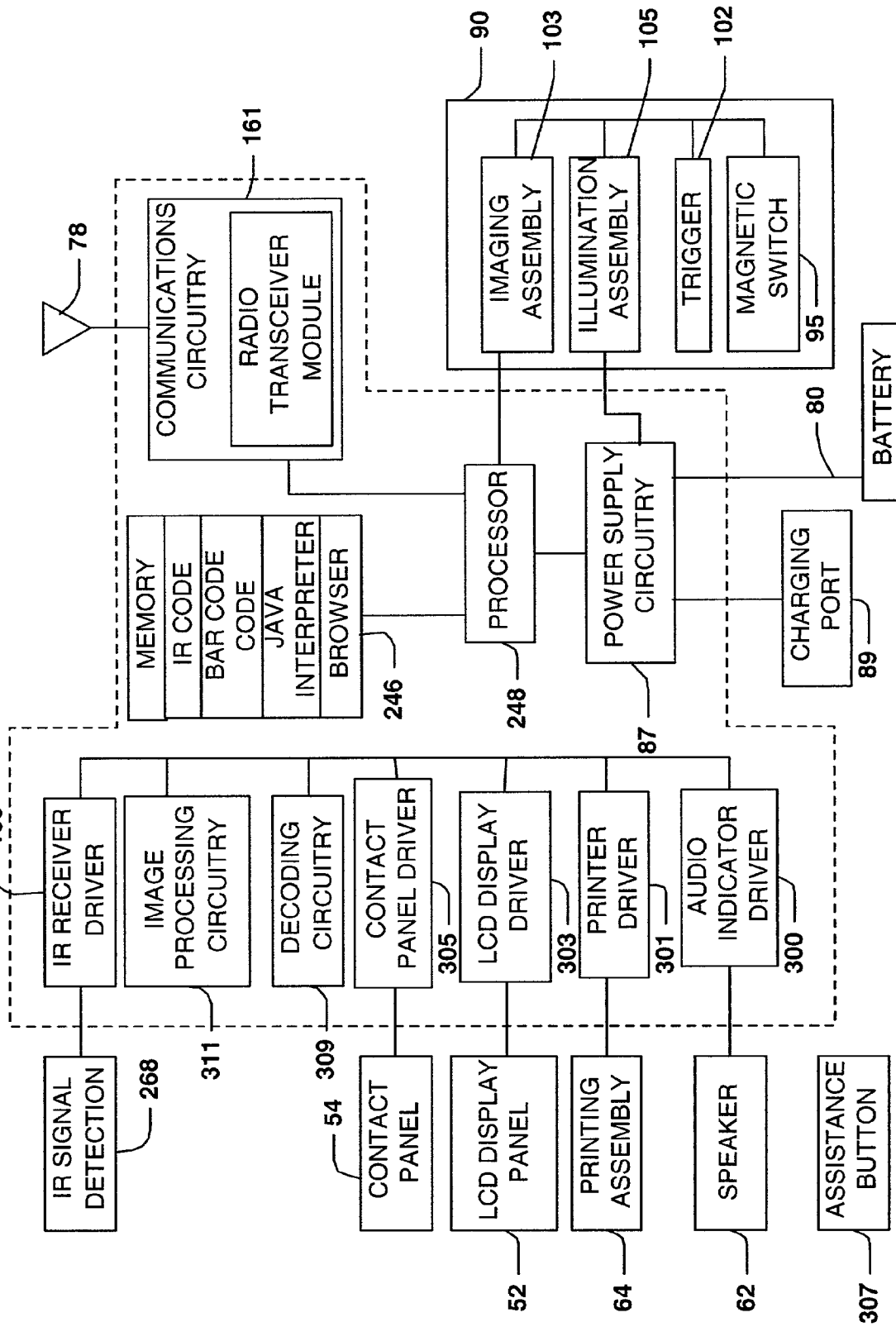
90
103
105
102
161
78
COMMUNICATIONS CIRCUITRY
RADIO TRANSCEIVER MODULE
IMAGING ASSEMBLY
ILLUMINATION ASSEMBLY
TRIGGER
MAGNETIC SWITCH
95
BATTERY
80
80
MEMORY
IR CODE
BAR CODE CODE
JAVA INTERPRETER
BROWSER
246
PROCESSOR
248
POWER SUPPLY CIRCUITRY
87
CHARGING PORT
89
153
IR RECEIVER DRIVER
IMAGE PROCESSING CIRCUITRY
DECODING CIRCUITRY
CONTACT PANEL DRIVER
305
LCD DISPLAY DRIVER
303
PRINTER DRIVER
301
AUDIO INDICATOR DRIVER
300
IR SIGNAL DETECTION
268
311
309
54
CONTACT PANEL
LCD DISPLAY PANEL
52
PRINTING ASSEMBLY
64
SPEAKER
62
ASSISTANCE BUTTON
307

Fig. 5

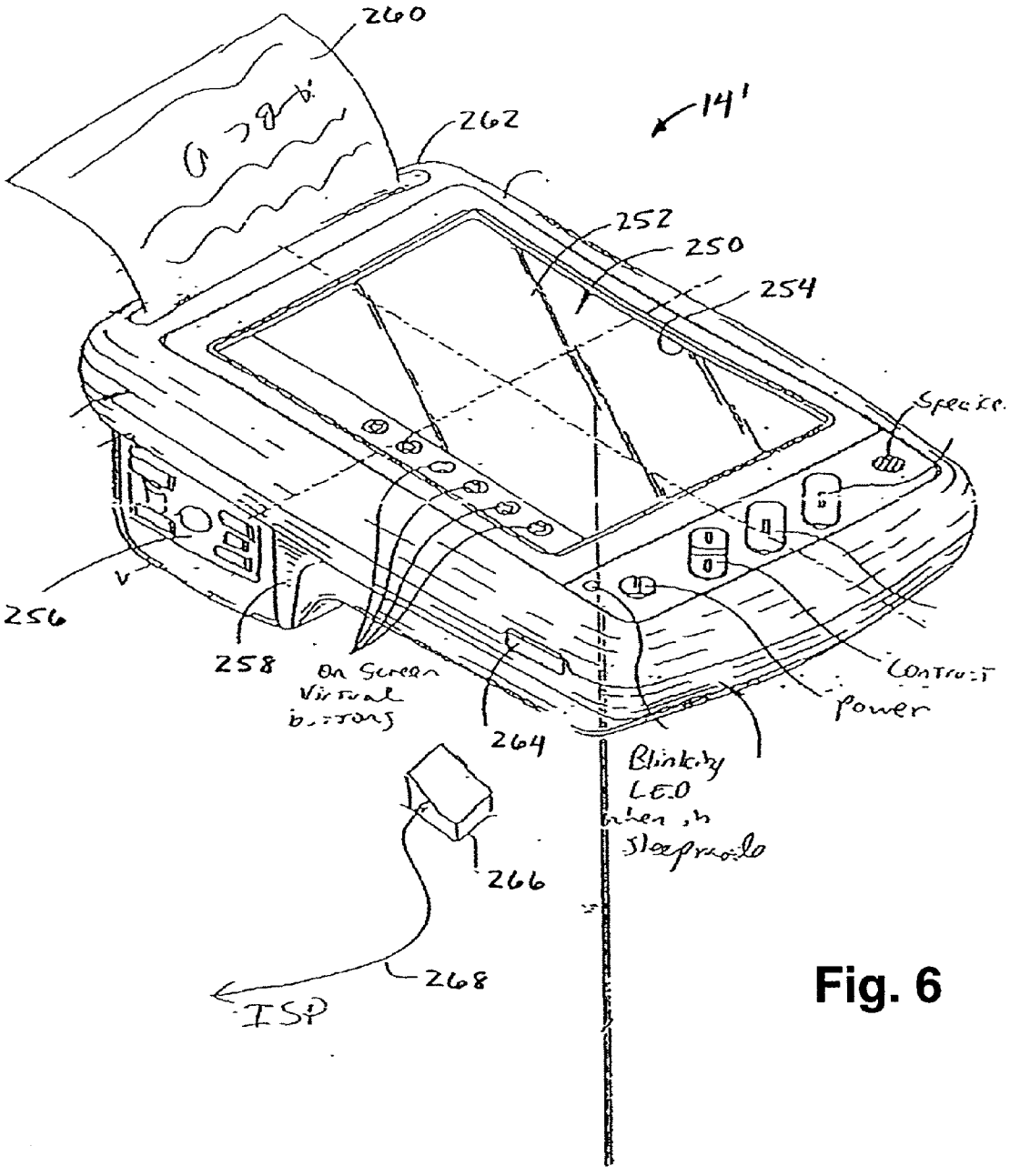
260
262
14'
252
250
254
Speaker
256
258
On Screen Virtual buttons
264
Blinking LED when in sleepmode
Power
266
268
ISP

Fig. 6

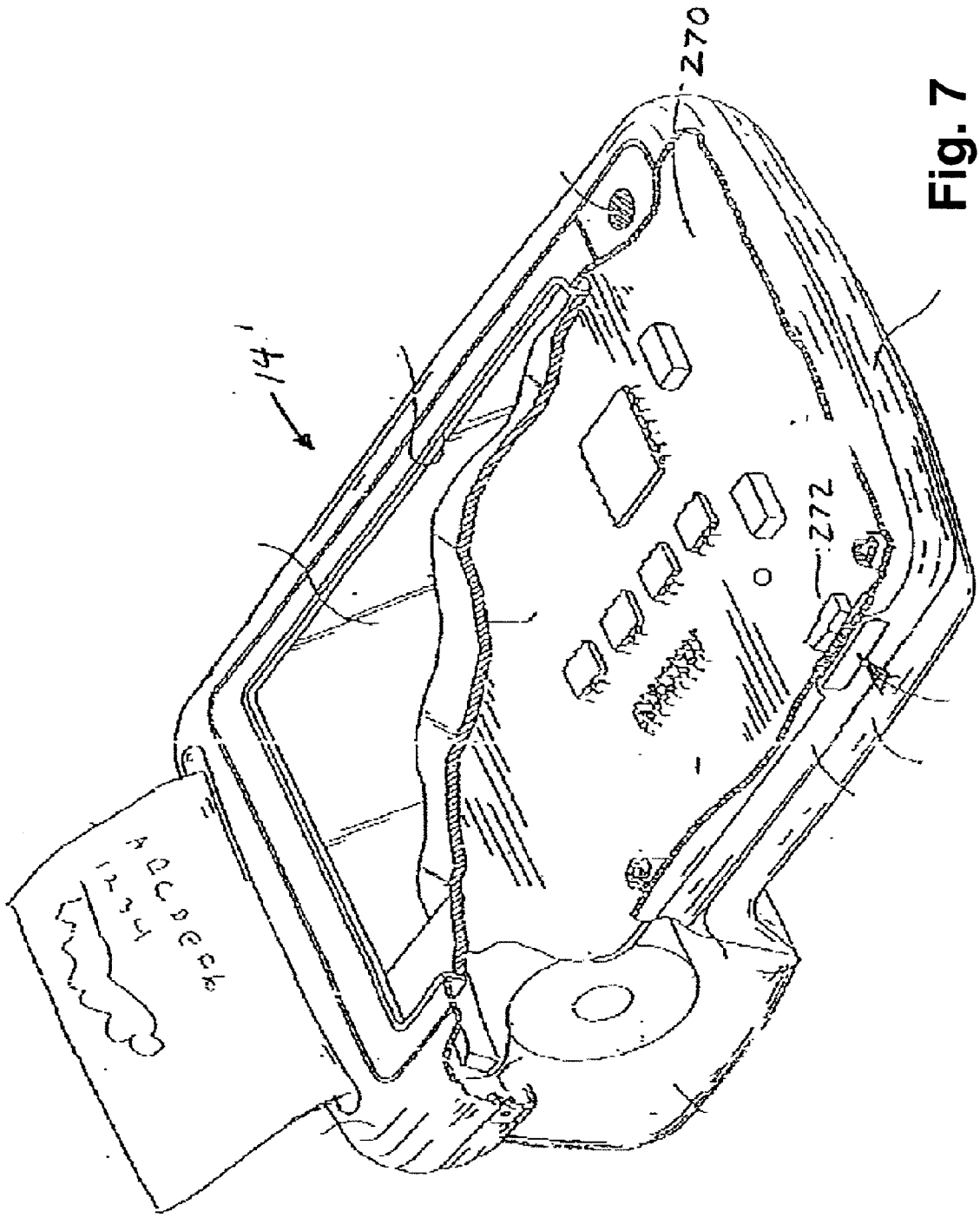

Fig. 7

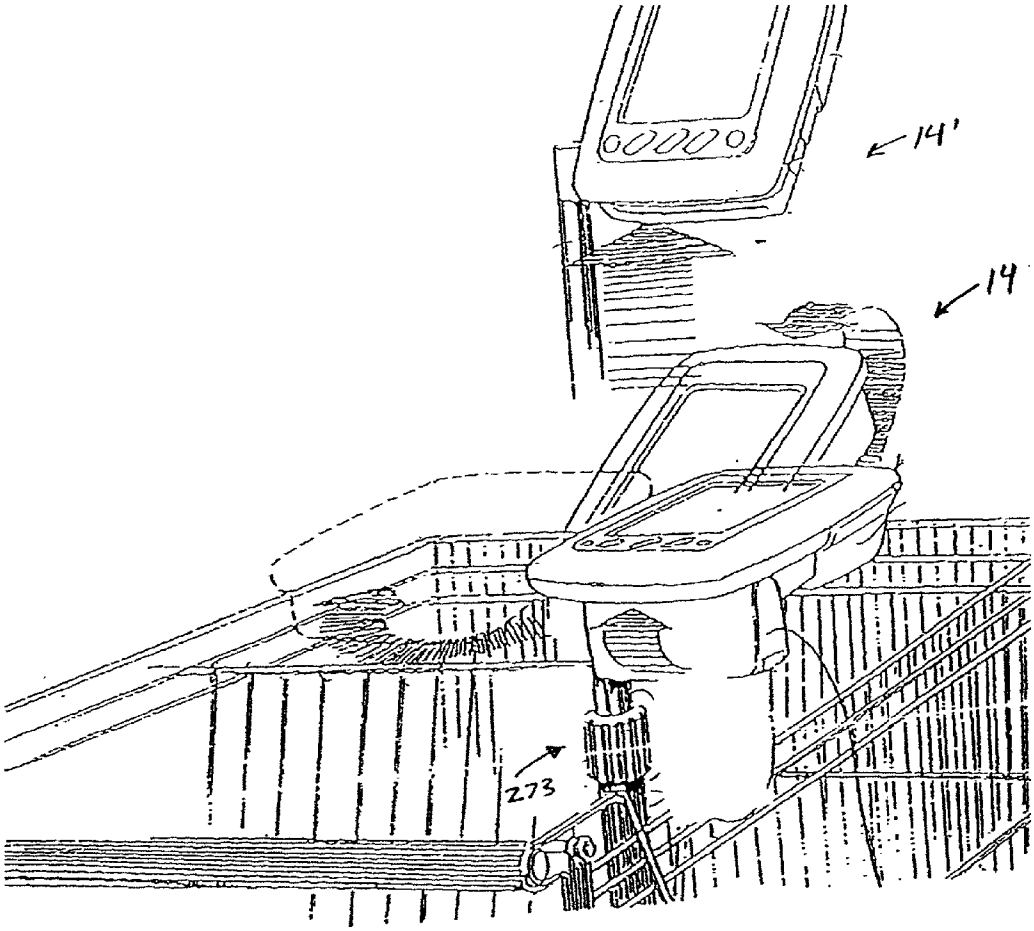

Fig. 8

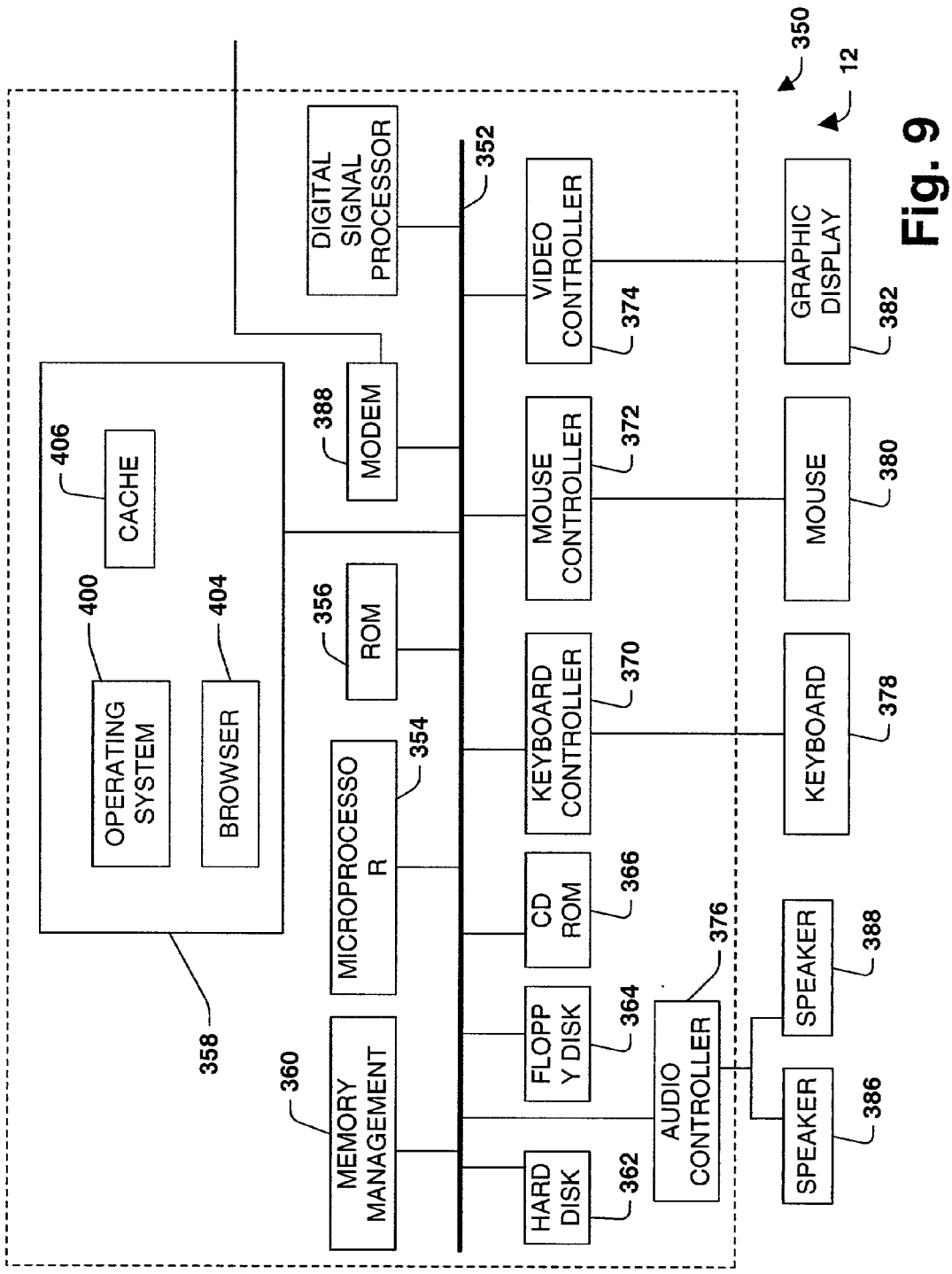
350
12
DIGITAL SIGNAL PROCESSOR
352
VIDEO CONTROLLER
374
GRAPHIC DISPLAY
382
406
CACHE
388
MODEM
MOUSE CONTROLLER
372
MOUSE
380
400
OPERATING SYSTEM
404
BROWSER
356
ROM
354
MICROPROCESSOR
KEYBOARD CONTROLLER
370
KEYBOARD
378
CD ROM
366
376
FLOPPY DISK
364
AUDIO CONTROLLER
SPEAKER
388
SPEAKER
386
358
360
MEMORY MANAGEMENT
HARD DISK
362

Fig. 9

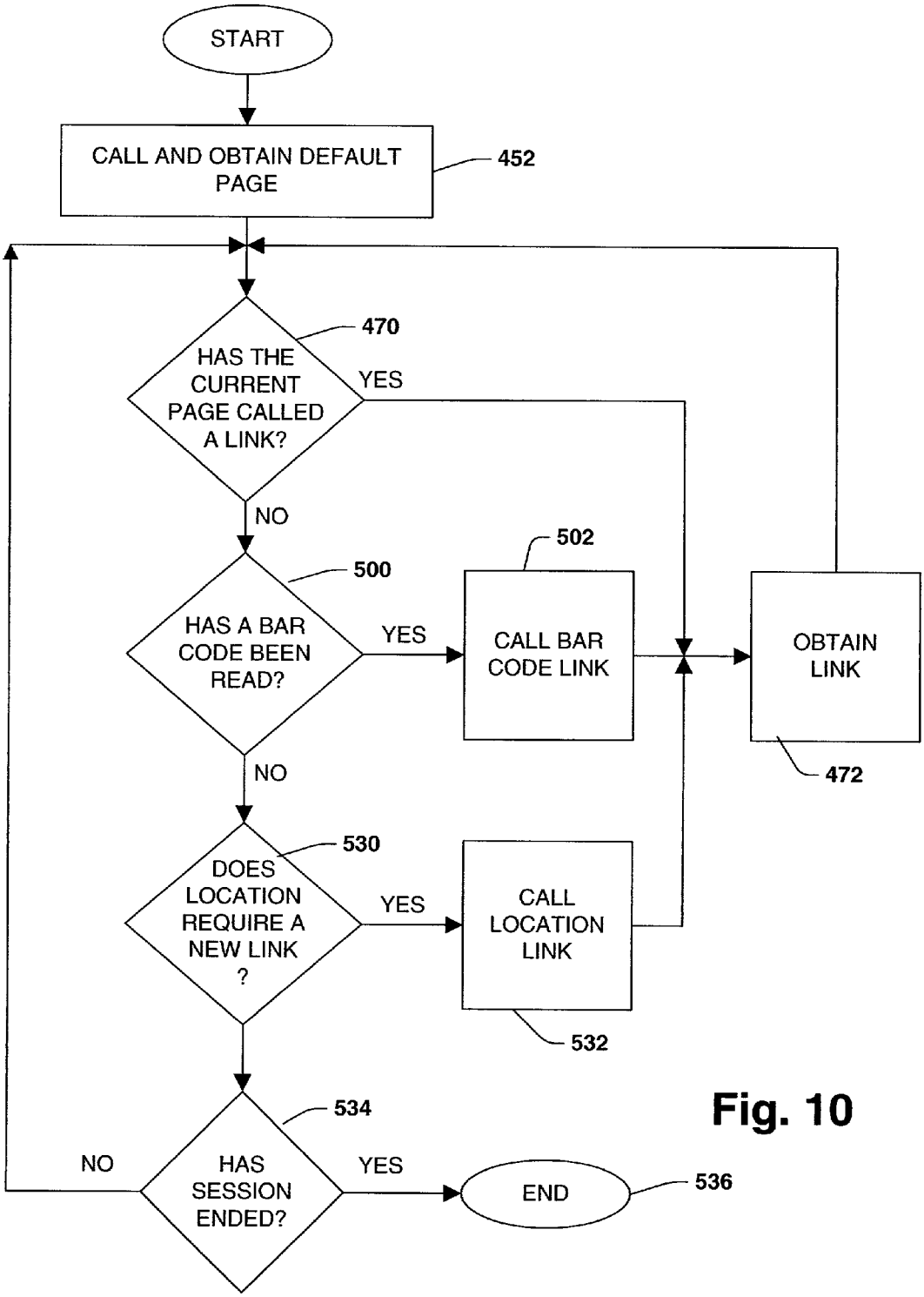
START
CALL AND OBTAIN DEFAULT PAGE
452
470
HAS THE CURRENT PAGE CALLED A LINK?
YES
NO
502
500
HAS A BAR CODE BEEN READ?
YES
CALL BAR CODE LINK
OBTAIN LINK
472
NO
530
DOES LOCATION REQUIRE A NEW LINK ?
YES
CALL LOCATION LINK
532
534
NO
HAS SESSION ENDED?
YES
END
536

Fig. 10

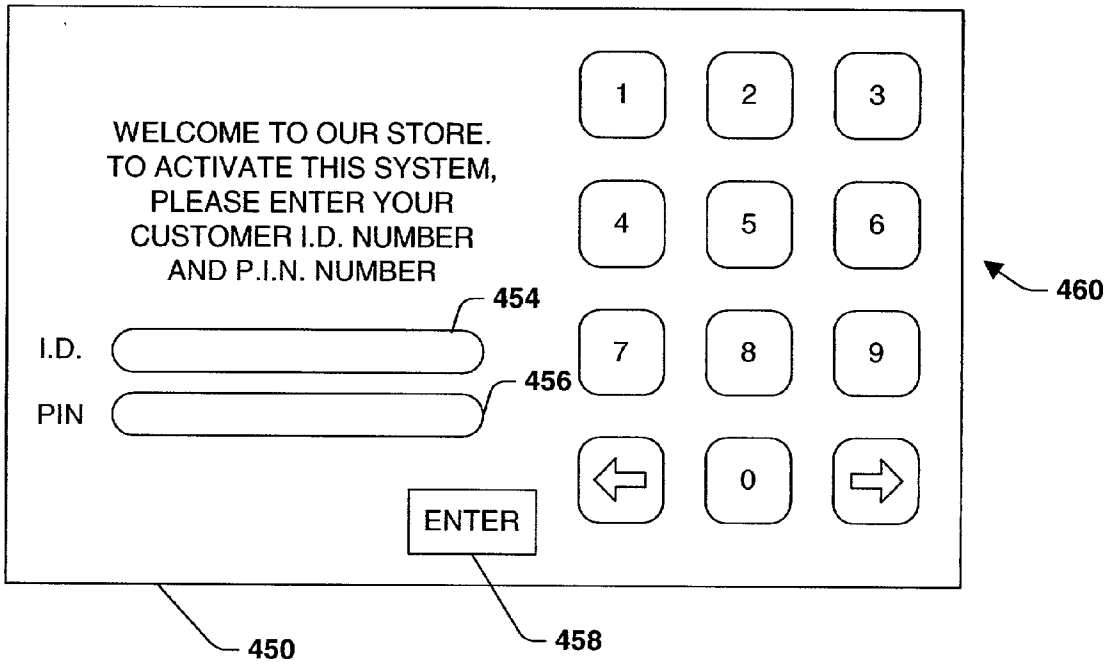
WELCOME TO OUR STORE.
TO ACTIVATE THIS SYSTEM,
PLEASE ENTER YOUR
CUSTOMER I.D. NUMBER
AND P.I.N. NUMBER
I.D.
PIN
ENTER
1
2
3
4
5
6
7
8
9
0
454
456
458
460
450

Fig. 11

SERVER		
HTML PAGE STORAGE	DATA BASE STORAGE	PROGRAMS
INTRODUCTORY PAGE INVALID I.D.PAGE MAIN MENU PAGE GENERIC CONFIRM PURCHASE PAGE CUSTOM CONFIRM PURCHASE PAGES LOCATION BASED ADVERTISEMENT PAGES RECIPE FORM PAGE STORE MAP PAGE CHECK-OUT PAGE PREPARED ORDER ITEM SUB-MENU PAGE ICON PAGE COUPON PAGE SHOPPING LIST PAGE	UPC PRICE DESCRIPTION RECIPES STORE LOCATIONS COUPON INFO. ICON INFO. EXPIRATION INFO.	CUSTOMER VERIFICATION PROGRAM BAR CODE READ PROGRAM LOCATION SEARCH PROGRAM RECIPE SEARCH PROGRAM RUNNING TOTAL PROGRAM CHECK-OUT PROGRAM CUSTOMER LOCATION PROGRAM COUPON STATE PROGRAM WEB BROWSER STATE PROGRAM SHOPPING LIST STATE PROGRAM "COOKIE" PROGRAM

Fig. 12

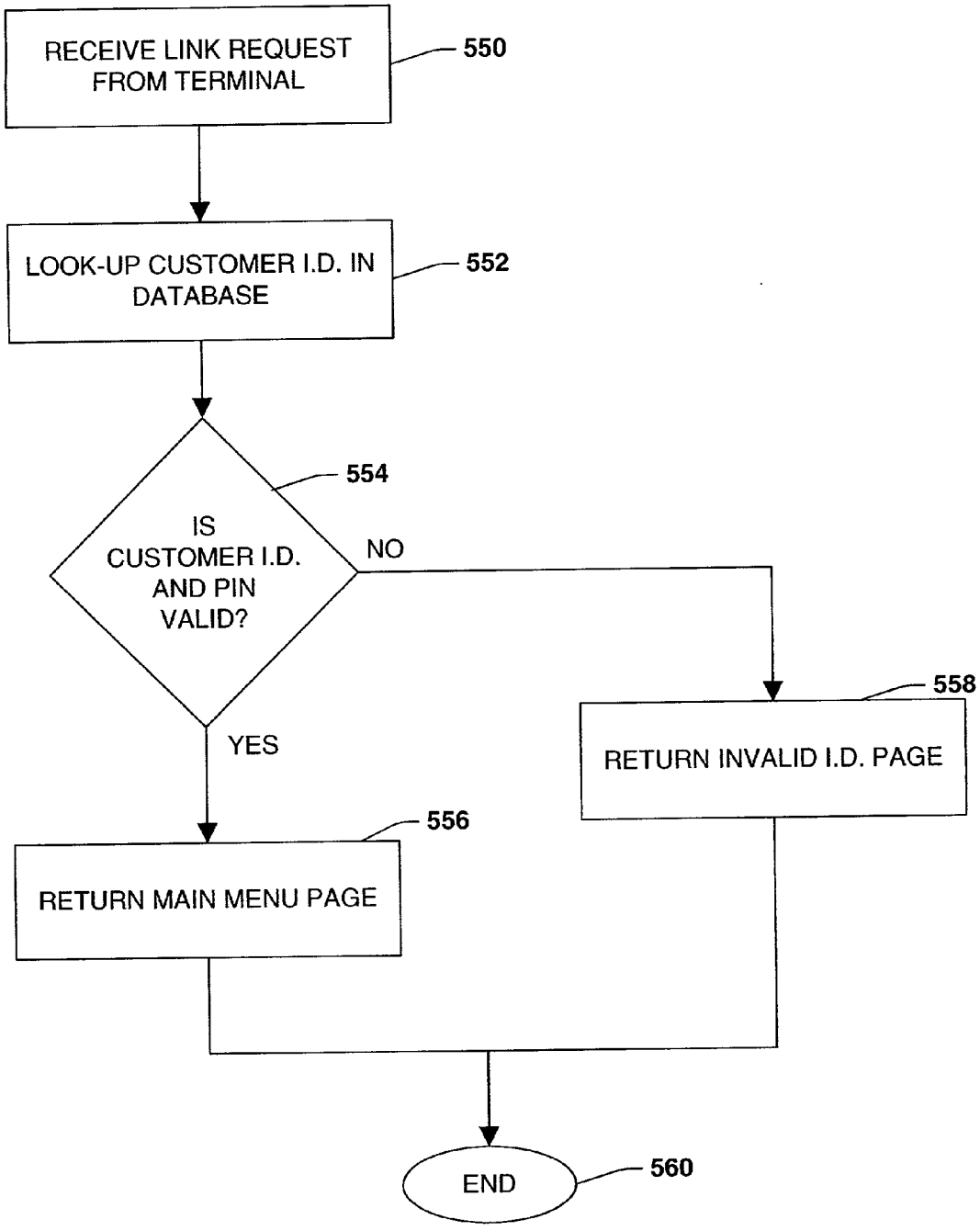
RECEIVE LINK REQUEST FROM TERMINAL
550
LOOK-UP CUSTOMER I.D. IN DATABASE
552
IS CUSTOMER I.D. AND PIN VALID?
554
NO
YES
RETURN INVALID I.D. PAGE
558
RETURN MAIN MENU PAGE
556
END
560

Fig. 13

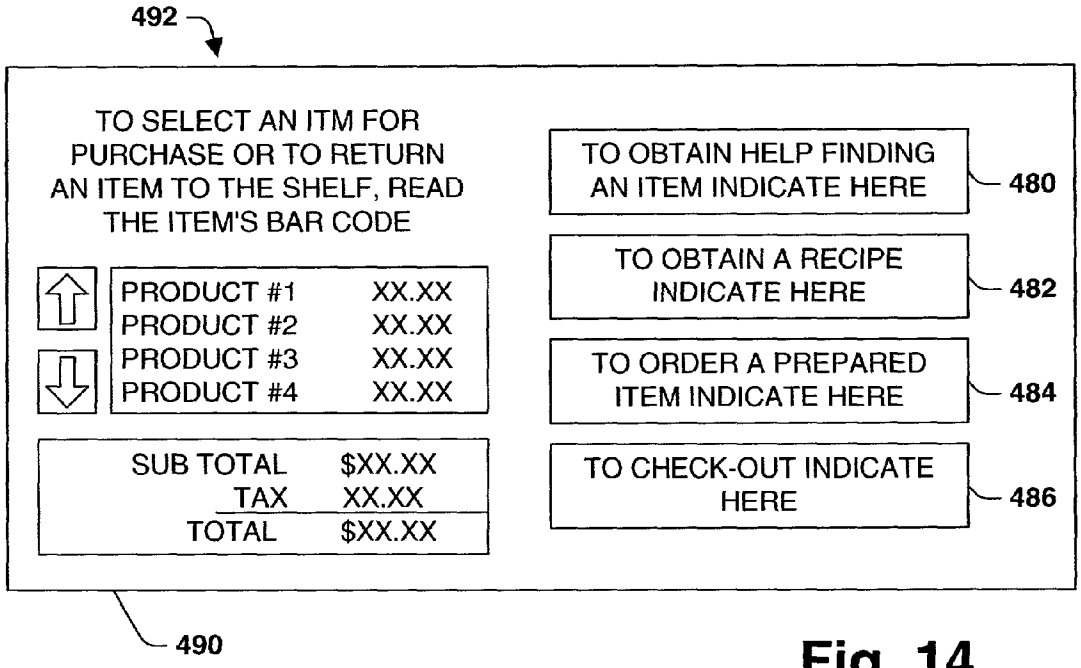
492
TO SELECT AN ITM FOR PURCHASE OR TO RETURN AN ITEM TO THE SHELF, READ THE ITEM'S BAR CODE
PRODUCT #1 XX.XX
PRODUCT #2 XX.XX
PRODUCT #3 XX.XX
PRODUCT #4 XX.XX
SUB TOTAL $XX.XX
TAX XX.XX
TOTAL $XX.XX
TO OBTAIN HELP FINDING AN ITEM INDICATE HERE
480
TO OBTAIN A RECIPE INDICATE HERE
482
TO ORDER A PREPARED ITEM INDICATE HERE
484
TO CHECK-OUT INDICATE HERE
486
490

Fig. 14

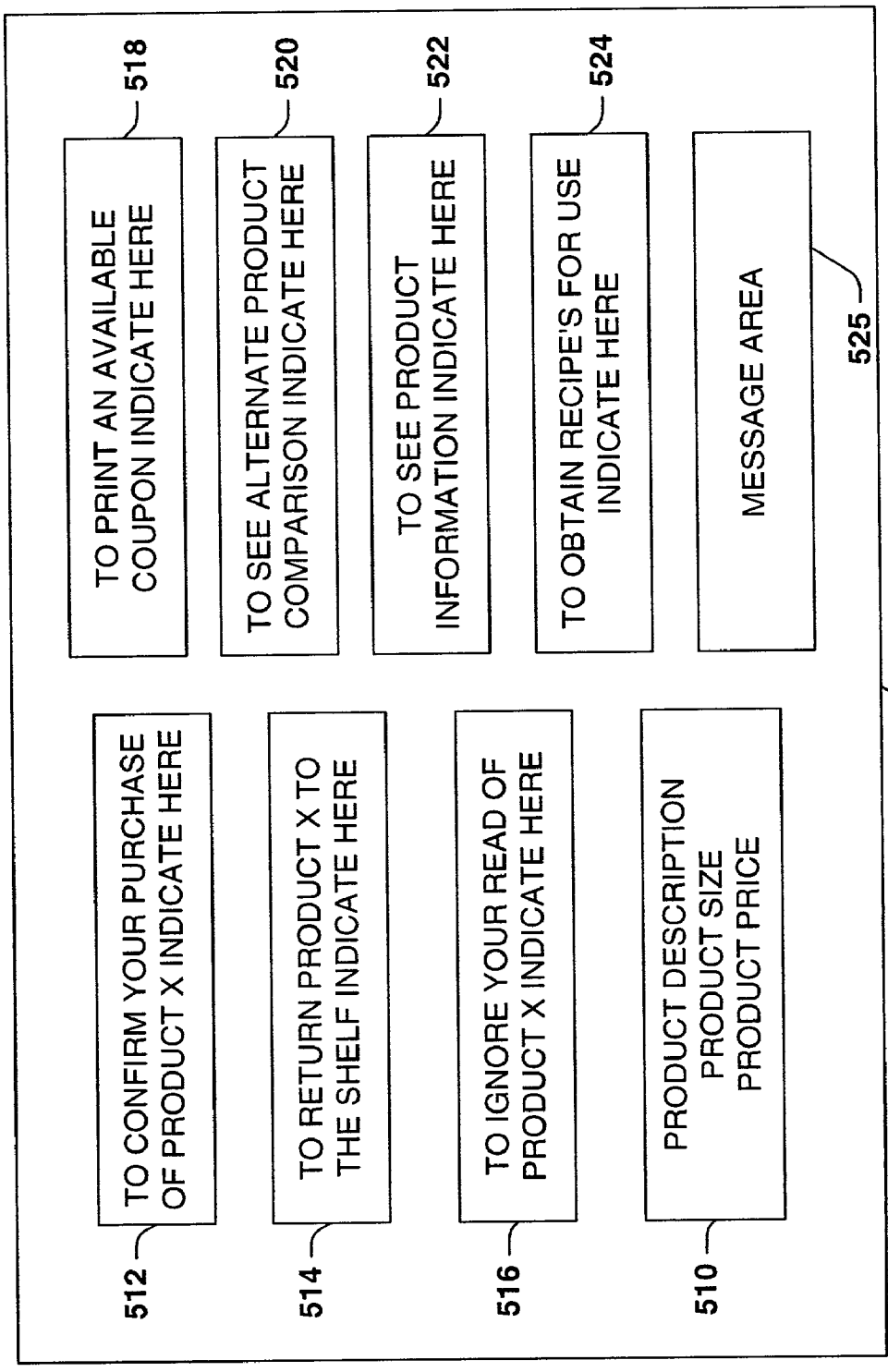
TO CONFIRM YOUR PURCHASE OF PRODUCT X INDICATE HERE
512
TO RETURN PRODUCT X TO THE SHELF INDICATE HERE
514
TO IGNORE YOUR READ OF PRODUCT X INDICATE HERE
516
PRODUCT DESCRIPTION
PRODUCT SIZE
PRODUCT PRICE
510
523
TO PRINT AN AVAILABLE COUPON INDICATE HERE
518
TO SEE ALTERNATE PRODUCT COMPARISON INDICATE HERE
520
TO SEE PRODUCT INFORMATION INDICATE HERE
522
TO OBTAIN RECIPE'S FOR USE INDICATE HERE
524
MESSAGE AREA
525

Fig. 15

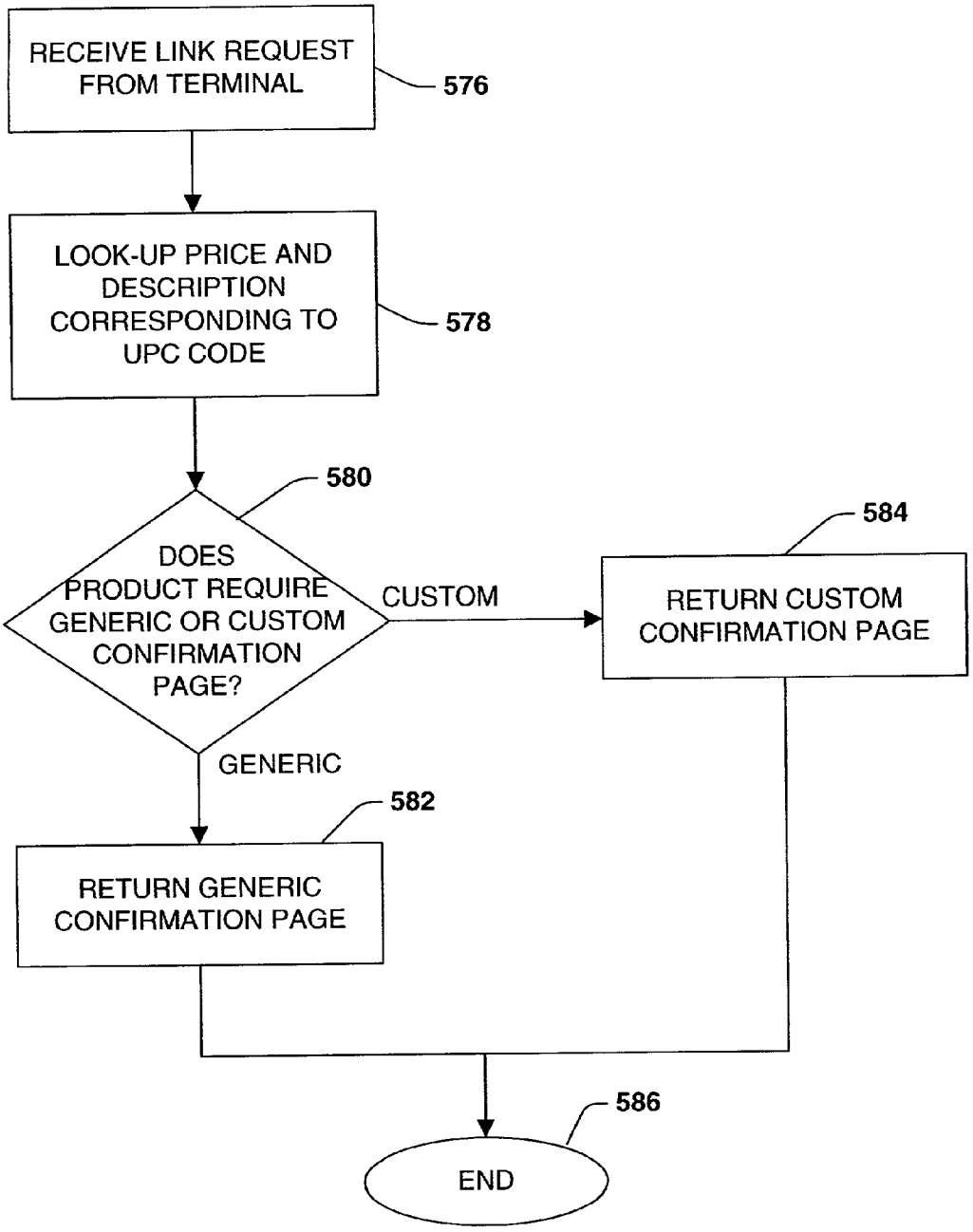
RECEIVE LINK REQUEST FROM TERMINAL
576
LOOK-UP PRICE AND DESCRIPTION CORRESPONDING TO UPC CODE
578
580
DOES PRODUCT REQUIRE GENERIC OR CUSTOM CONFIRMATION PAGE?
CUSTOM
584
RETURN CUSTOM CONFIRMATION PAGE
GENERIC
582
RETURN GENERIC CONFIRMATION PAGE
586
END

Fig. 16

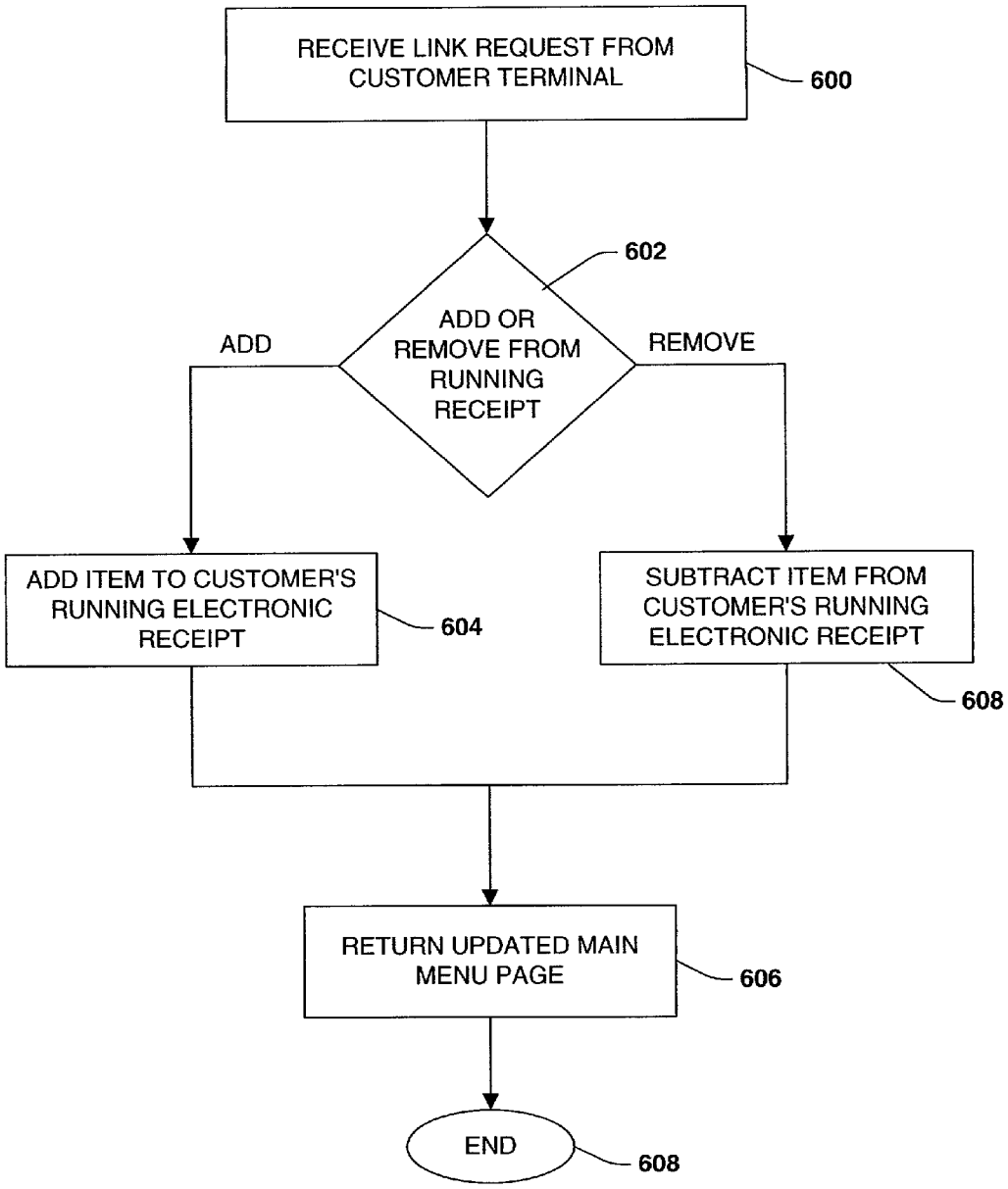
RECEIVE LINK REQUEST FROM CUSTOMER TERMINAL
600
602
ADD OR REMOVE FROM RUNNING RECEIPT
ADD
REMOVE
ADD ITEM TO CUSTOMER'S RUNNING ELECTRONIC RECEIPT
604
SUBTRACT ITEM FROM CUSTOMER'S RUNNING ELECTRONIC RECEIPT
608
RETURN UPDATED MAIN MENU PAGE
606
END
608

Fig. 17

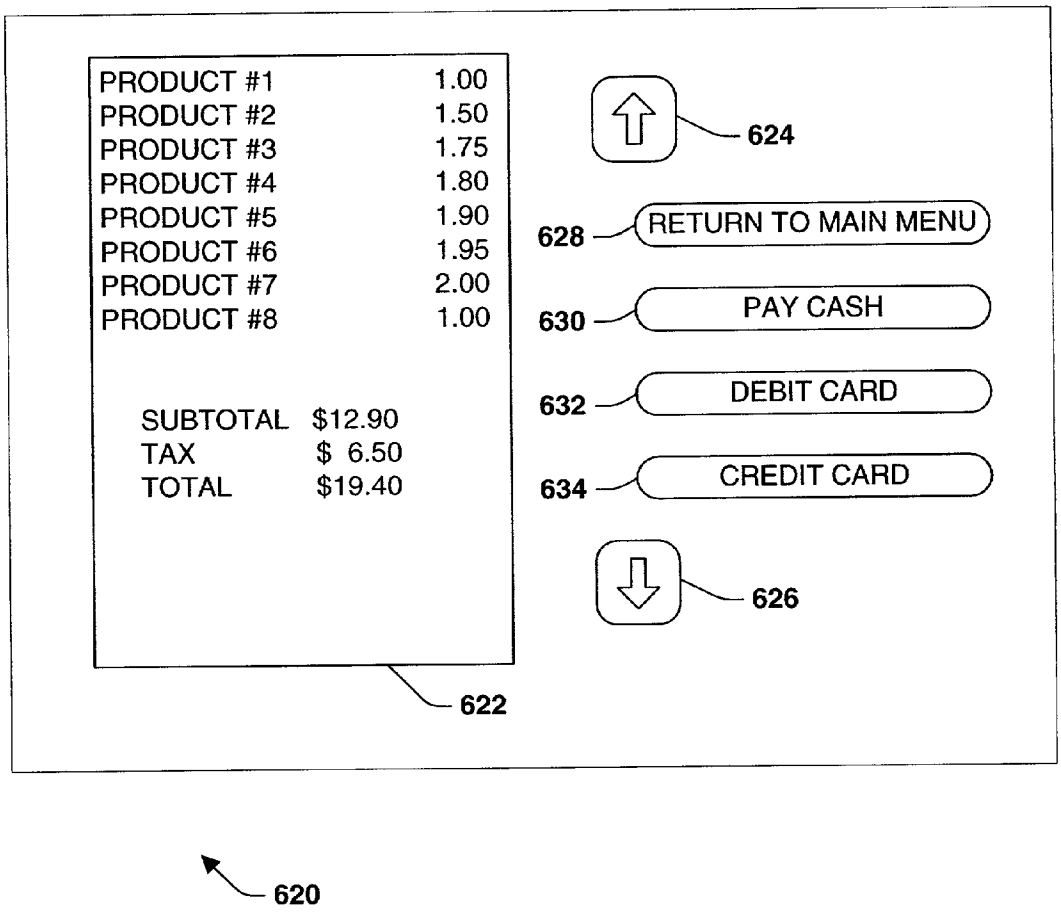
PRODUCT #1 1.00
PRODUCT #2 1.50
PRODUCT #3 1.75
PRODUCT #4 1.80
PRODUCT #5 1.90
PRODUCT #6 1.95
PRODUCT #7 2.00
PRODUCT #8 1.00
SUBTOTAL $12.90
TAX $ 6.50
TOTAL $19.40
622
624
628
RETURN TO MAIN MENU
630
PAY CASH
632
DEBIT CARD
634
CREDIT CARD
626
620

Fig. 18

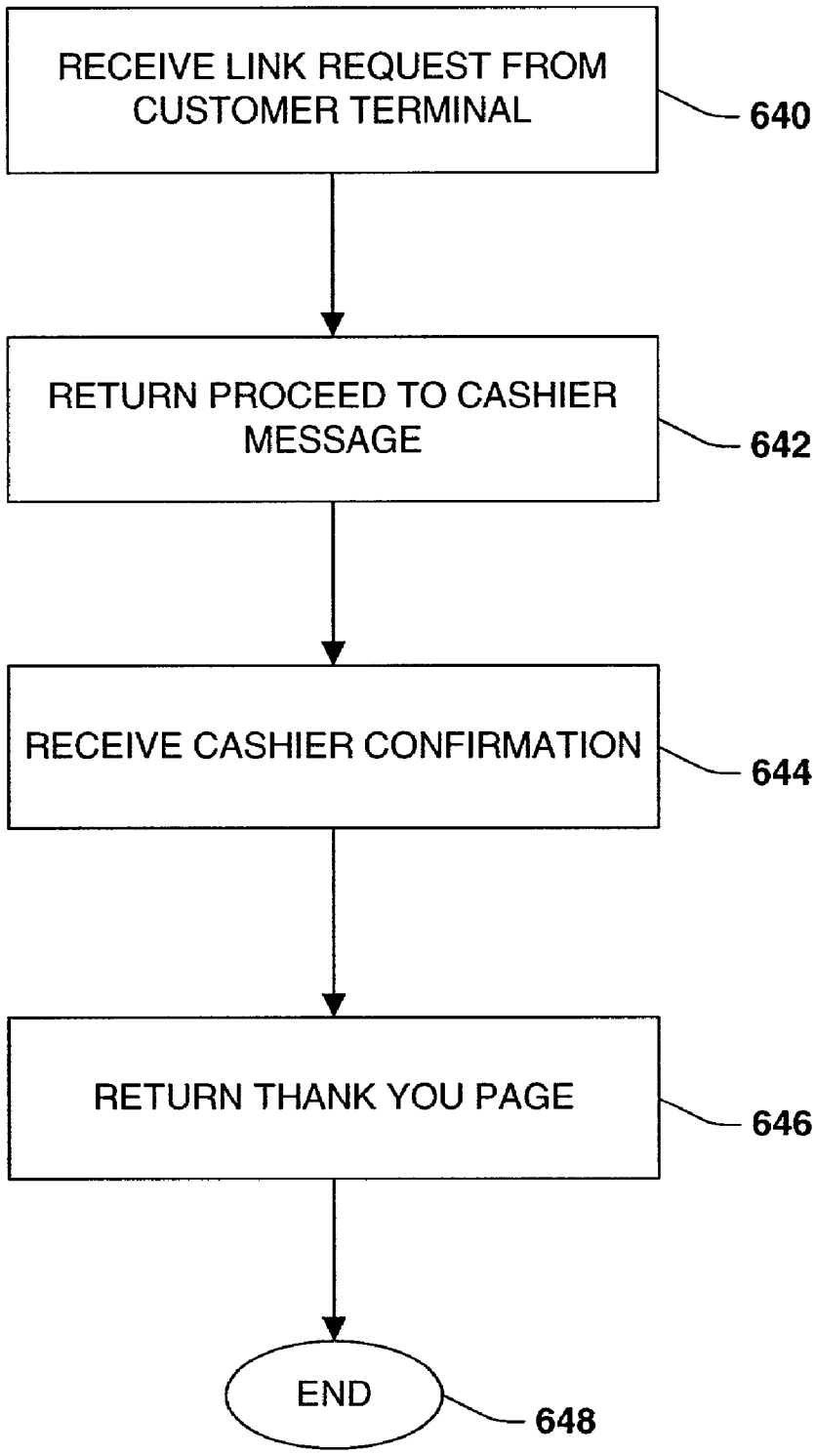
RECEIVE LINK REQUEST FROM CUSTOMER TERMINAL
640
RETURN PROCEED TO CASHIER MESSAGE
642
RECEIVE CASHIER CONFIRMATION
644
RETURN THANK YOU PAGE
646
END
648

Fig. 19a

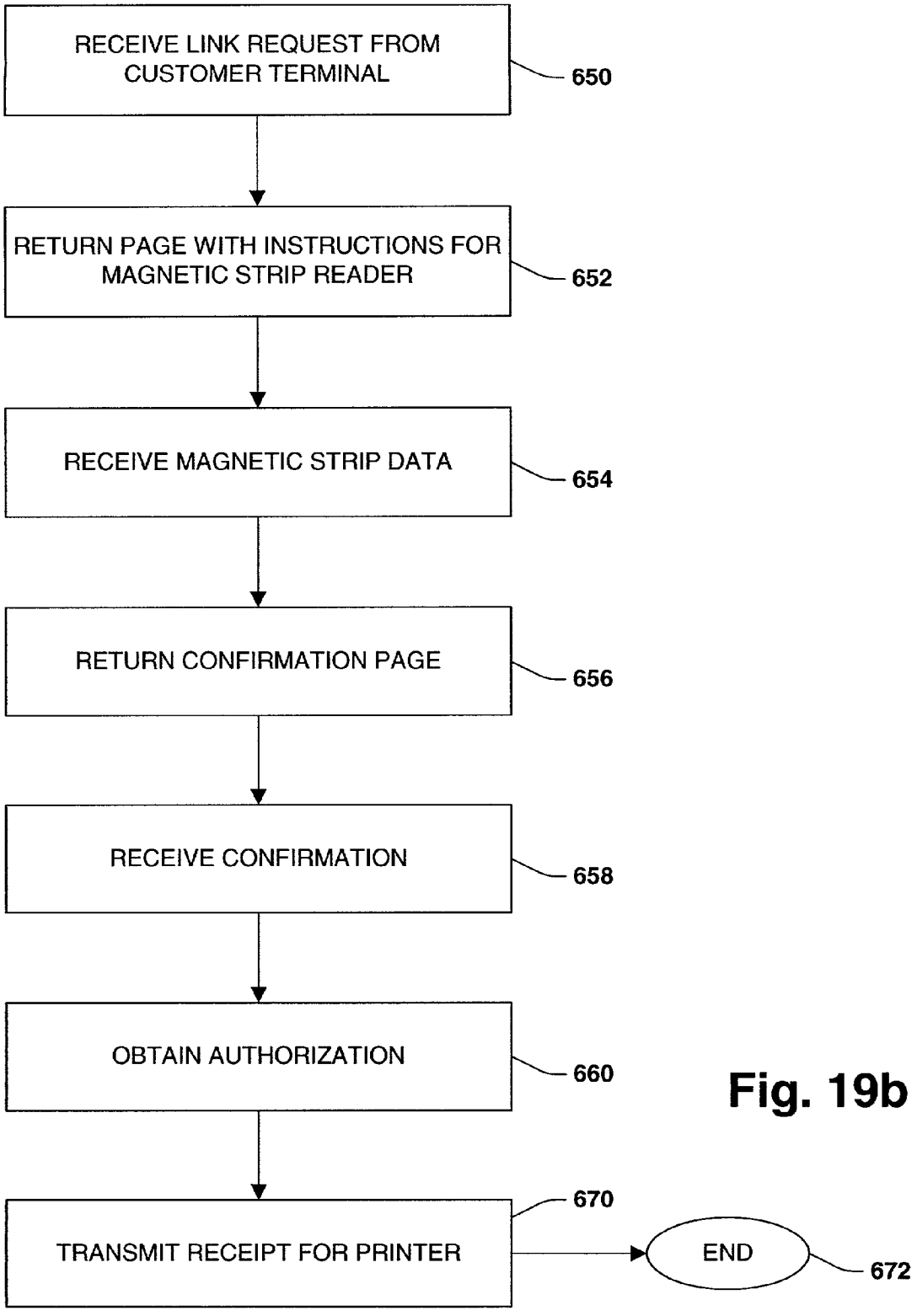
RECEIVE LINK REQUEST FROM CUSTOMER TERMINAL
650
RETURN PAGE WITH INSTRUCTIONS FOR MAGNETIC STRIP READER
652
RECEIVE MAGNETIC STRIP DATA
654
RETURN CONFIRMATION PAGE
656
RECEIVE CONFIRMATION
658
OBTAIN AUTHORIZATION
660
670
TRANSMIT RECEIPT FOR PRINTER
END
672

Fig. 19b

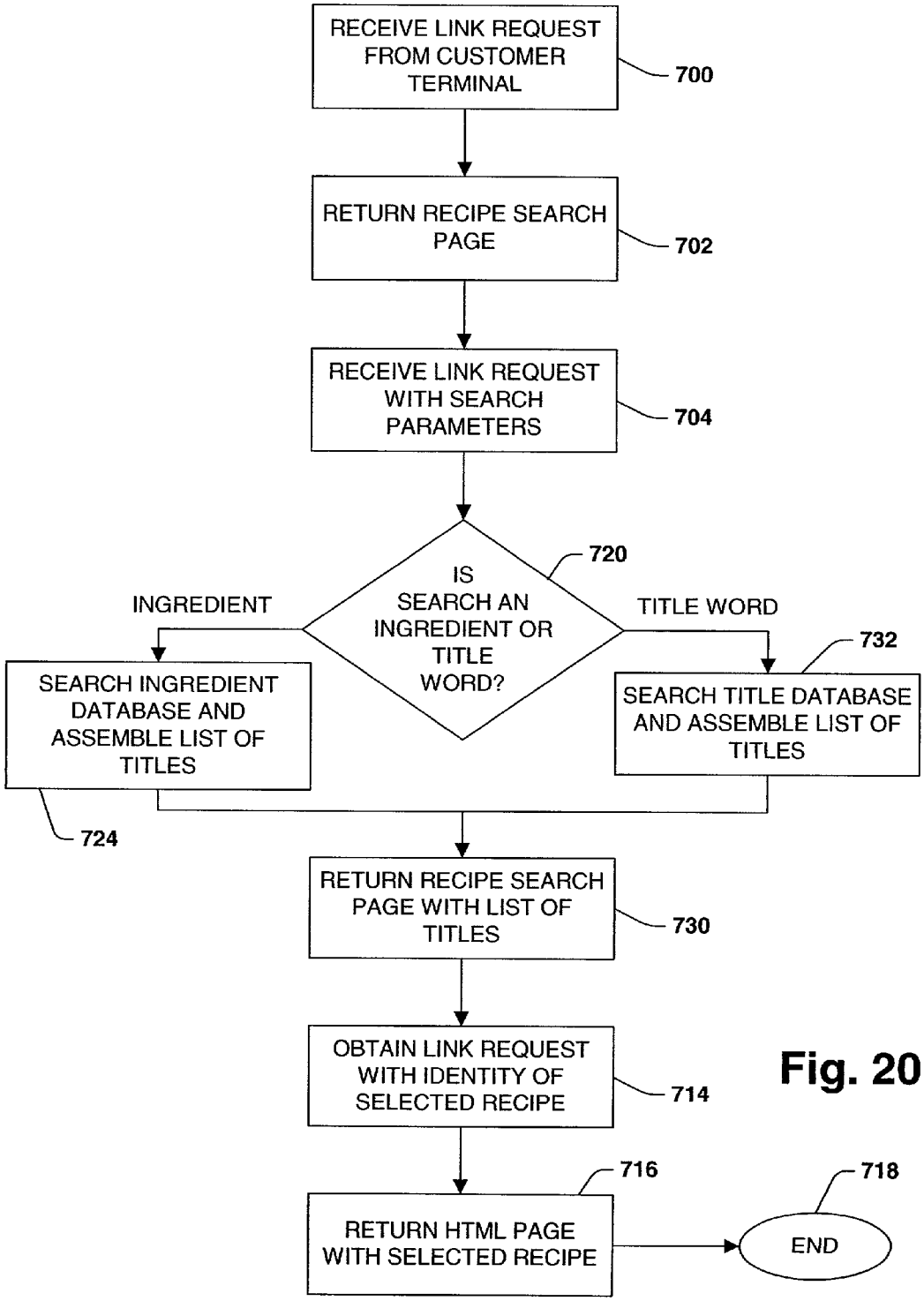
RECEIVE LINK REQUEST FROM CUSTOMER TERMINAL
700
RETURN RECIPE SEARCH PAGE
702
RECEIVE LINK REQUEST WITH SEARCH PARAMETERS
704
IS SEARCH AN INGREDIENT OR TITLE WORD?
720
INGREDIENT
TITLE WORD
SEARCH INGREDIENT DATABASE AND ASSEMBLE LIST OF TITLES
724
SEARCH TITLE DATABASE AND ASSEMBLE LIST OF TITLES
732
RETURN RECIPE SEARCH PAGE WITH LIST OF TITLES
730
OBTAIN LINK REQUEST WITH IDENTITY OF SELECTED RECIPE
714
RETURN HTML PAGE WITH SELECTED RECIPE
716
END
718

Fig. 20

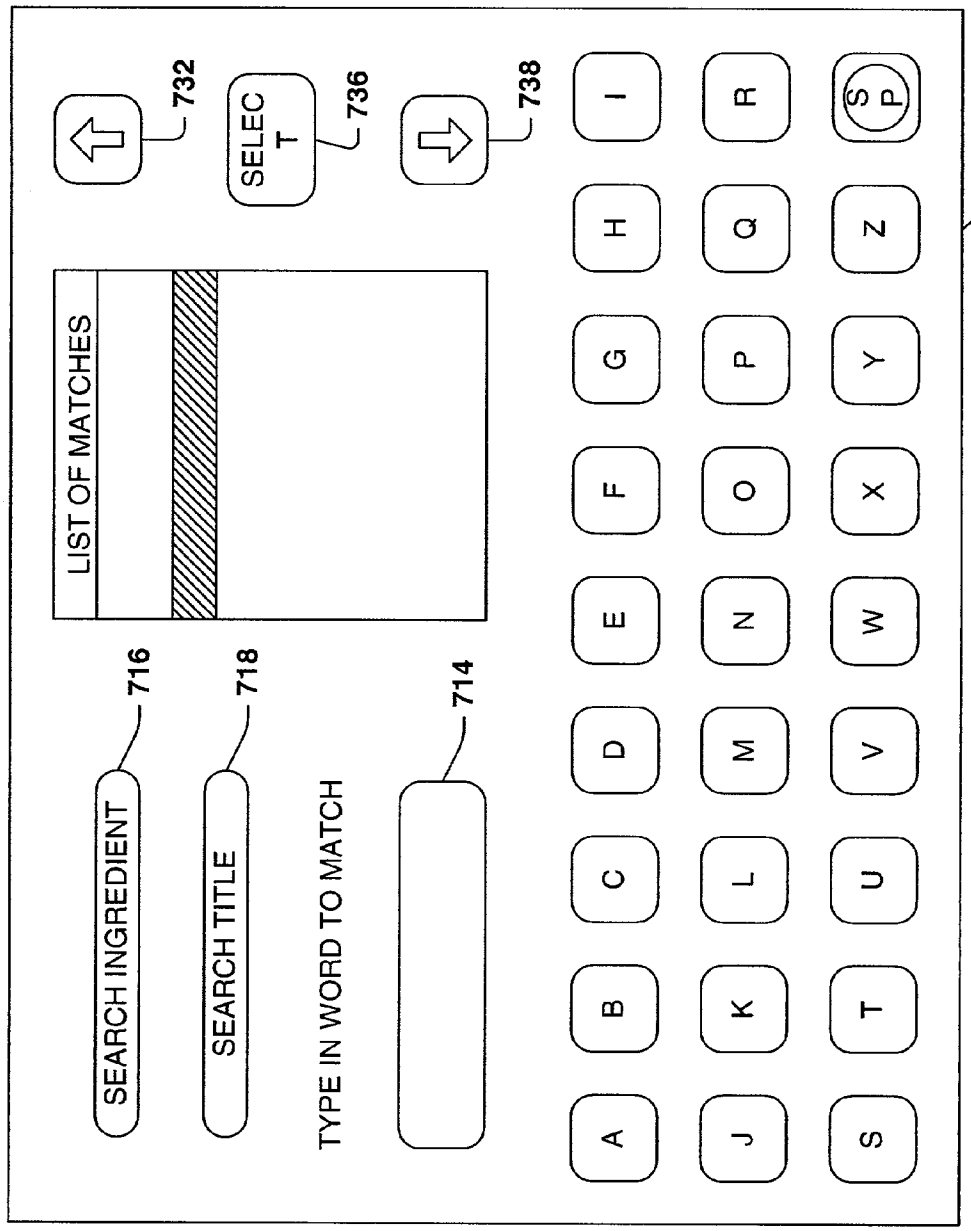
732
SELEC T
736
738
LIST OF MATCHES
716
SEARCH INGREDIENT
718
SEARCH TITLE
714
TYPE IN WORD TO MATCH
A B C D E F G H I
J K L M N O P Q R
S T U V W X Y Z SP
712
700

Fig. 21

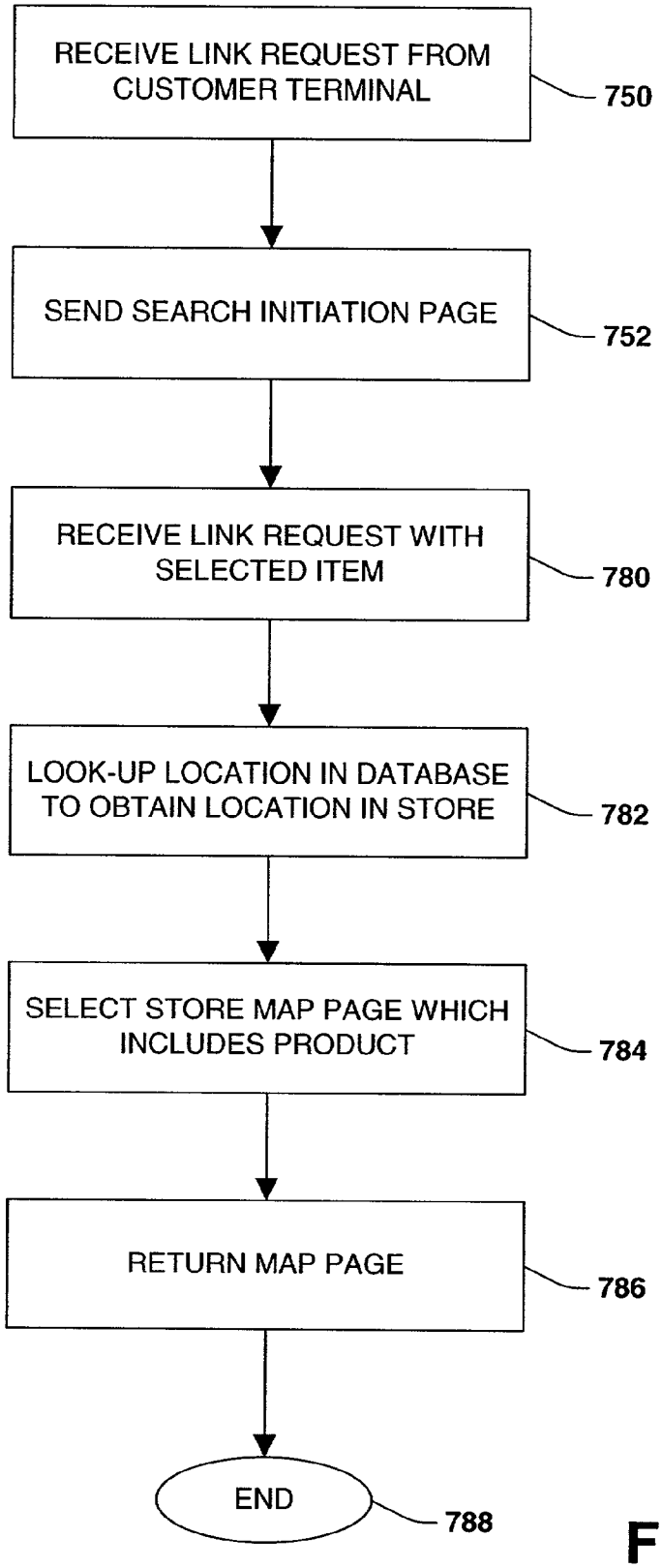
RECEIVE LINK REQUEST FROM CUSTOMER TERMINAL
750
SEND SEARCH INITIATION PAGE
752
RECEIVE LINK REQUEST WITH SELECTED ITEM
780
LOOK-UP LOCATION IN DATABASE TO OBTAIN LOCATION IN STORE
782
SELECT STORE MAP PAGE WHICH INCLUDES PRODUCT
784
RETURN MAP PAGE
786
END
788

Fig. 22

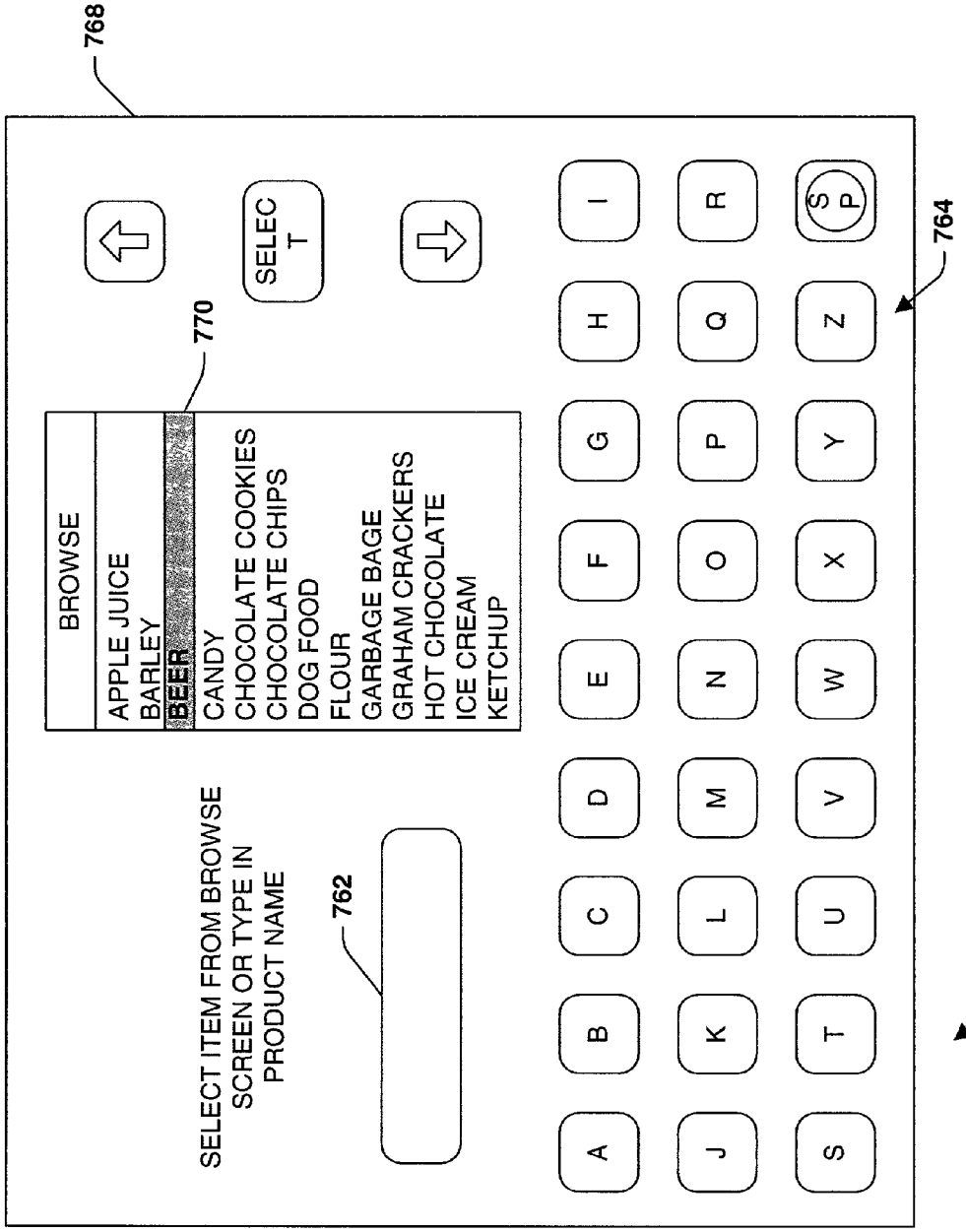
768
BROWSE
APPLE JUICE
BARLEY
BEER
CANDY
CHOCOLATE COOKIES
CHOCOLATE CHIPS
DOG FOOD
FLOUR
GARBAGE BAGE
GRAHAM CRACKERS
HOT CHOCOLATE
ICE CREAM
KETCHUP
770
SELEC T
SELECT ITEM FROM BROWSE SCREEN OR TYPE IN PRODUCT NAME
762
A B C D E F G H I
J K L M N O P Q R
S T U V W X Y Z SP
764
760

Fig. 23

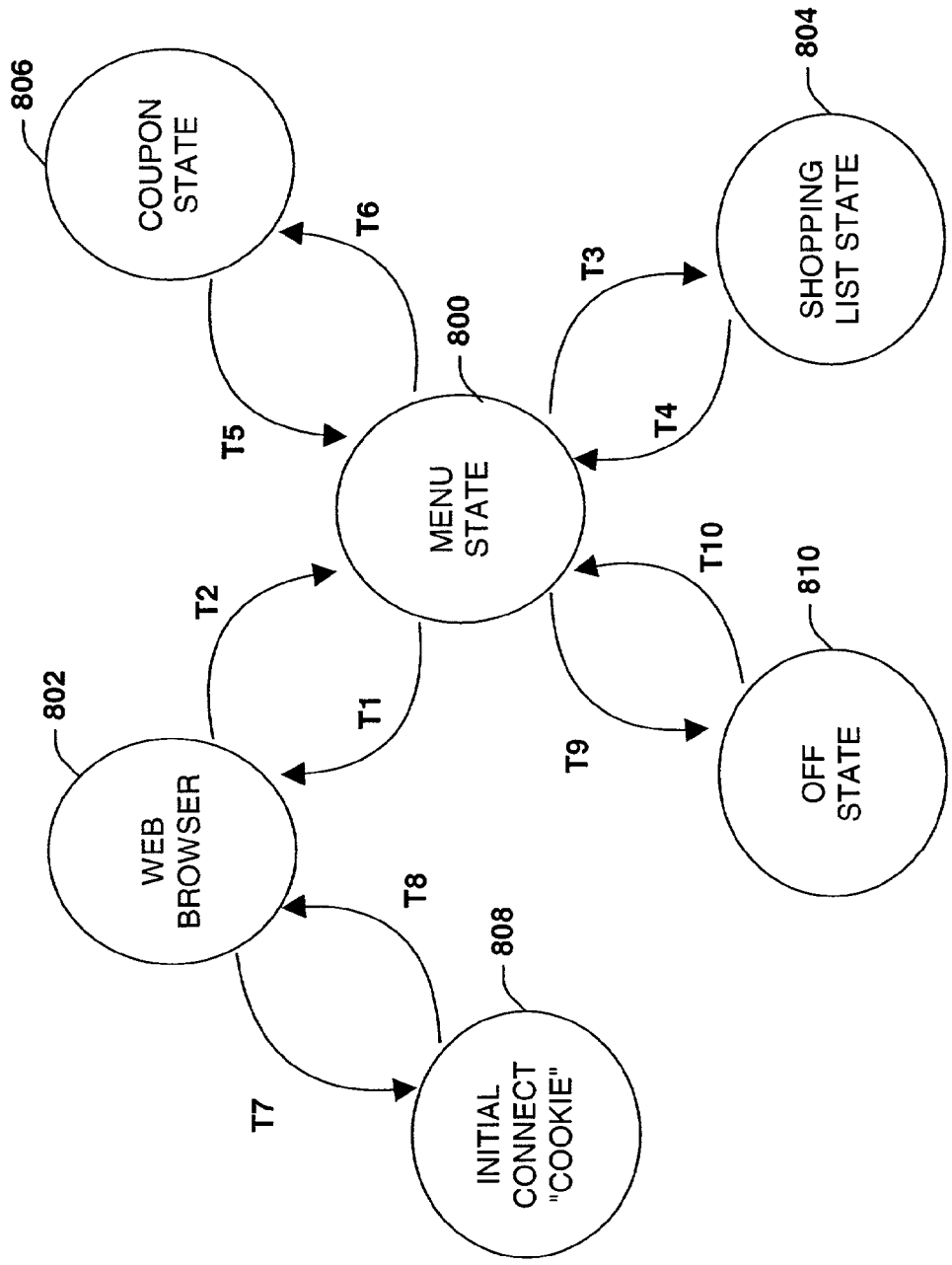
806
COUPON STATE
804
SHOPPING LIST STATE
800
MENU STATE
802
WEB BROWSER
810
OFF STATE
808
INITIAL CONNECT "COOKIE"
T1
T2
T3
T4
T5
T6
T7
T8
T9
T10

Fig. 24

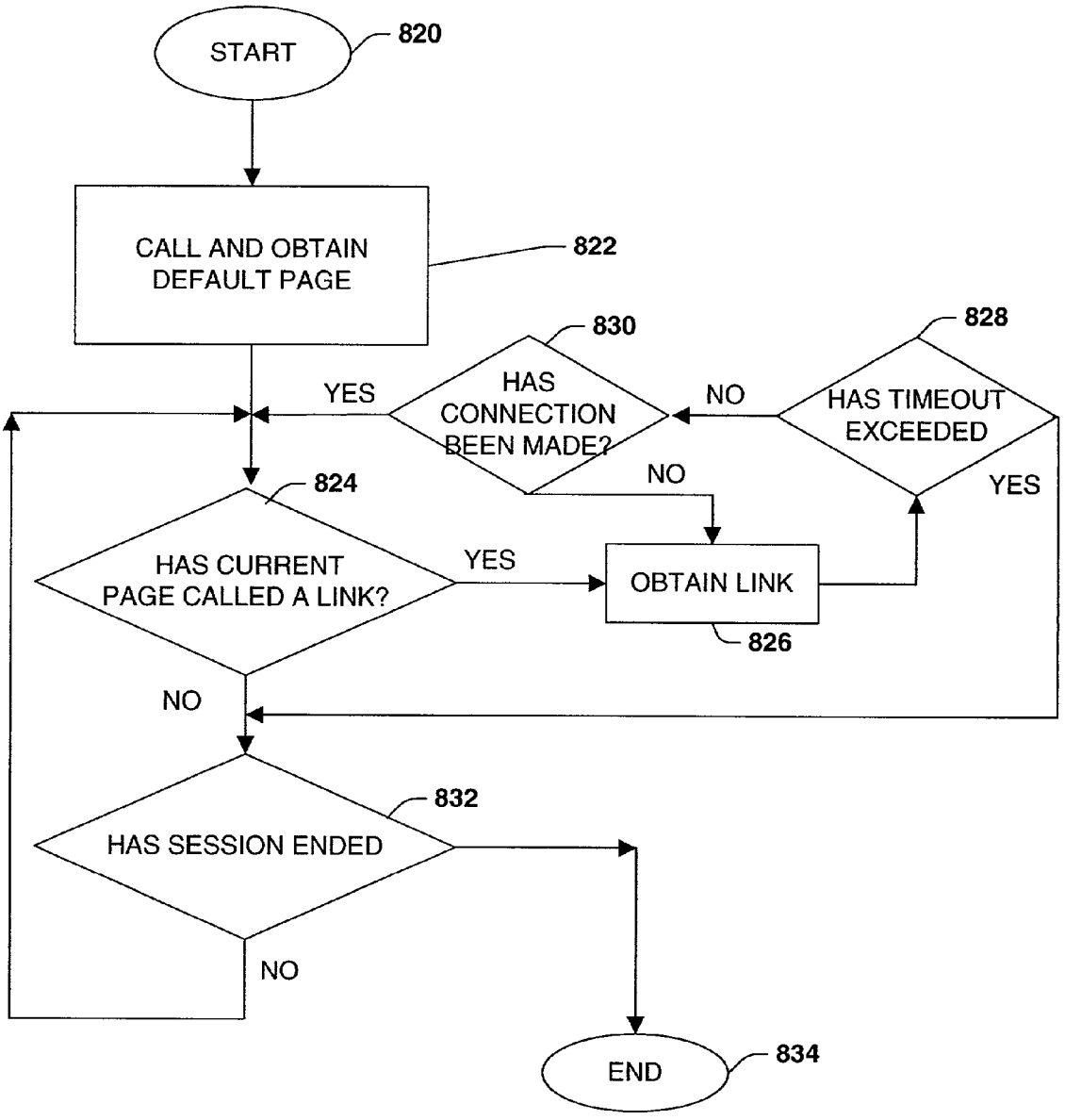
START
820
CALL AND OBTAIN DEFAULT PAGE
822
830
HAS CONNECTION BEEN MADE?
YES
NO
828
HAS TIMEOUT EXCEEDED
YES
NO
824
HAS CURRENT PAGE CALLED A LINK?
YES
OBTAIN LINK
826
NO
832
HAS SESSION ENDED
NO
END
834

Fig. 25

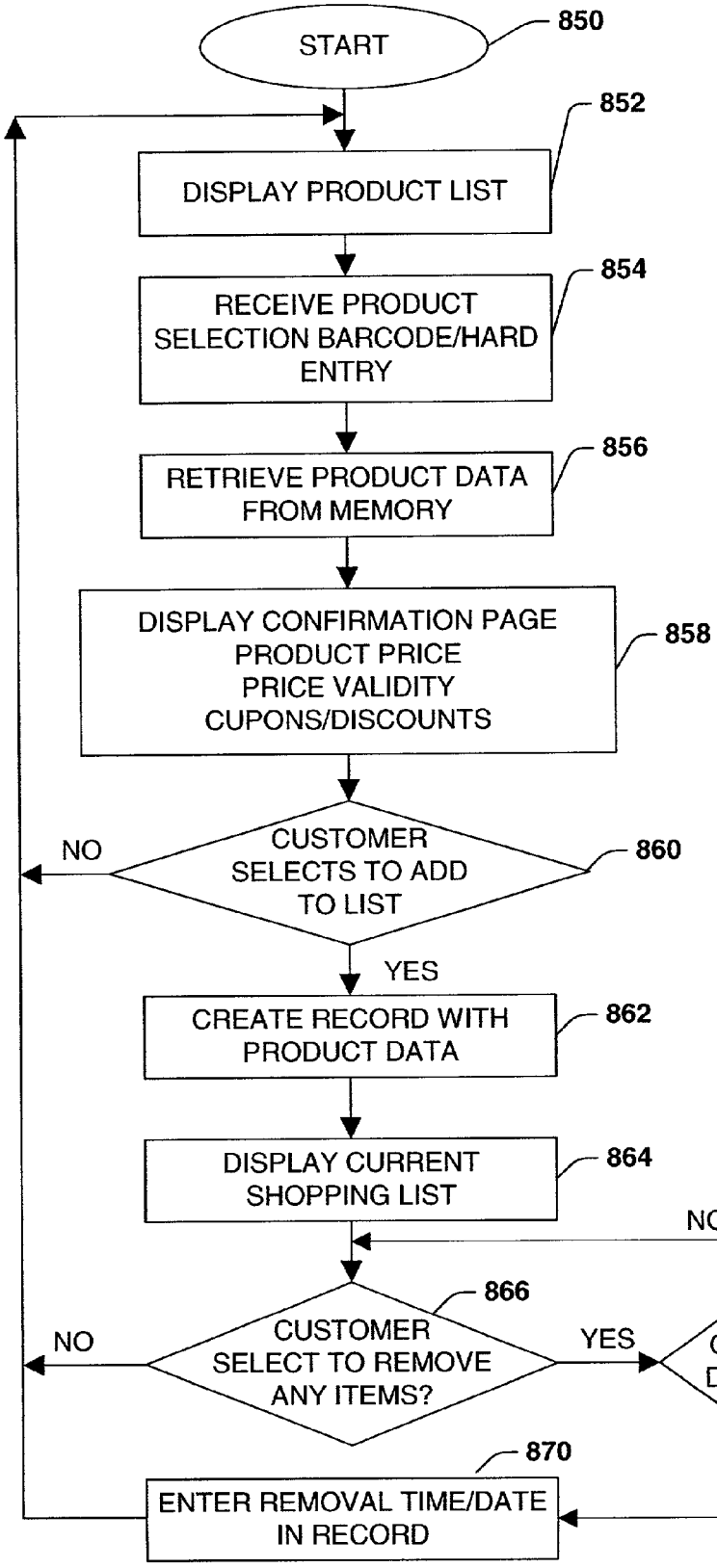
START
850
852
DISPLAY PRODUCT LIST
854
RECEIVE PRODUCT SELECTION BARCODE/HARD ENTRY
856
RETRIEVE PRODUCT DATA FROM MEMORY
858
DISPLAY CONFIRMATION PAGE
PRODUCT PRICE
PRICE VALIDITY
CUPONS/DISCOUNTS
CUSTOMER SELECTS TO ADD TO LIST
860
NO
YES
862
CREATE RECORD WITH PRODUCT DATA
864
DISPLAY CURRENT SHOPPING LIST
NO
866
CUSTOMER SELECT TO REMOVE ANY ITEMS?
NO
YES
868
CONFIRM DELETION
YES
870
ENTER REMOVAL TIME/DATE IN RECORD

Fig. 26

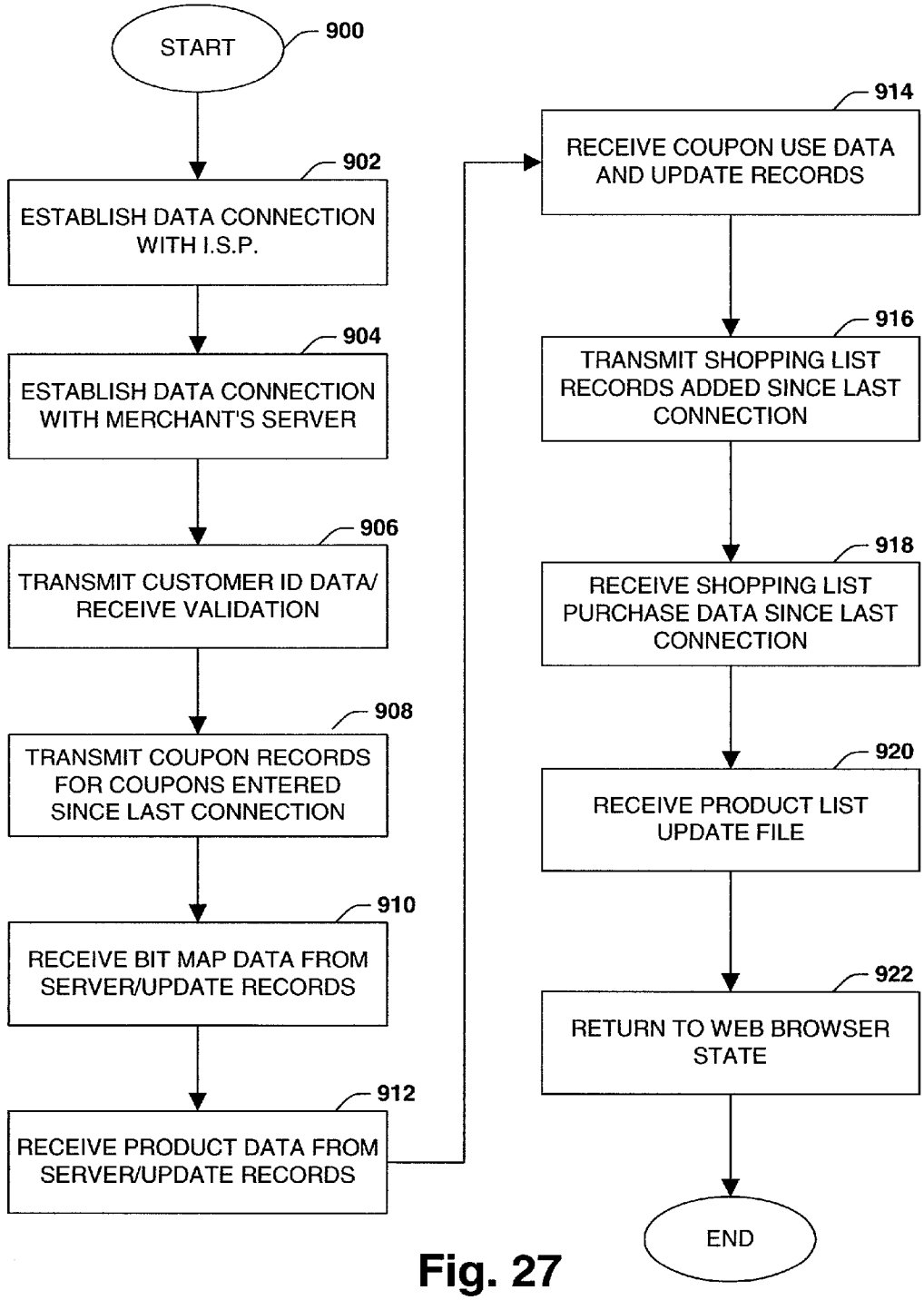
START
900
ESTABLISH DATA CONNECTION WITH I.S.P.
902
ESTABLISH DATA CONNECTION WITH MERCHANT'S SERVER
904
TRANSMIT CUSTOMER ID DATA/ RECEIVE VALIDATION
906
TRANSMIT COUPON RECORDS FOR COUPONS ENTERED SINCE LAST CONNECTION
908
RECEIVE BIT MAP DATA FROM SERVER/UPDATE RECORDS
910
RECEIVE PRODUCT DATA FROM SERVER/UPDATE RECORDS
912
RECEIVE COUPON USE DATA AND UPDATE RECORDS
914
TRANSMIT SHOPPING LIST RECORDS ADDED SINCE LAST CONNECTION
916
RECEIVE SHOPPING LIST PURCHASE DATA SINCE LAST CONNECTION
918
RECEIVE PRODUCT LIST UPDATE FILE
920
RETURN TO WEB BROWSER STATE
922
END

Fig. 27

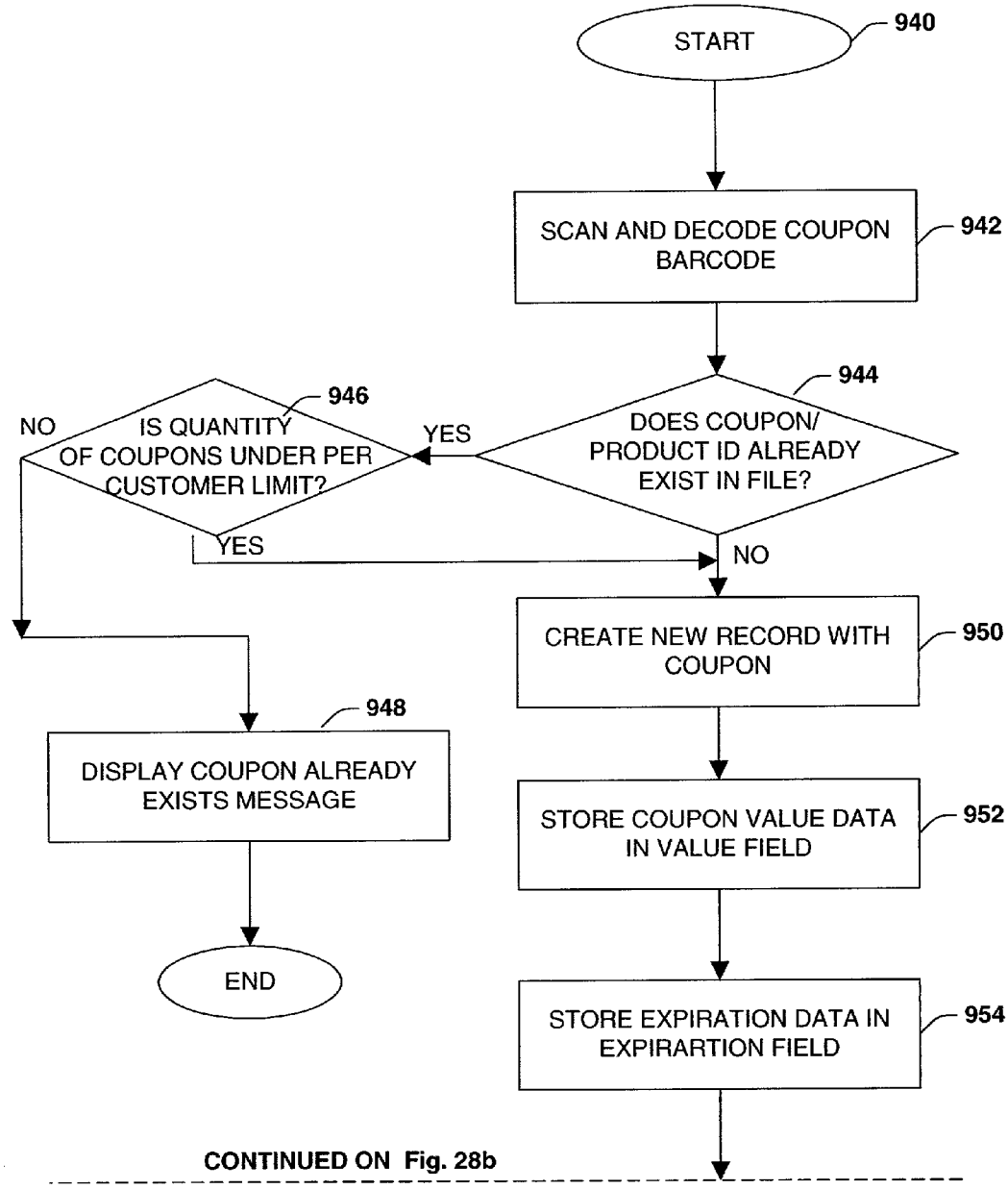
START
940
SCAN AND DECODE COUPON BARCODE
942
DOES COUPON/ PRODUCT ID ALREADY EXIST IN FILE?
944
YES
NO
IS QUANTITY OF COUPONS UNDER PER CUSTOMER LIMIT?
946
NO
YES
CREATE NEW RECORD WITH COUPON
950
STORE COUPON VALUE DATA IN VALUE FIELD
952
STORE EXPIRATION DATA IN EXPIRARTION FIELD
954
DISPLAY COUPON ALREADY EXISTS MESSAGE
948
END
CONTINUED ON Fig. 28b

Fig. 28a

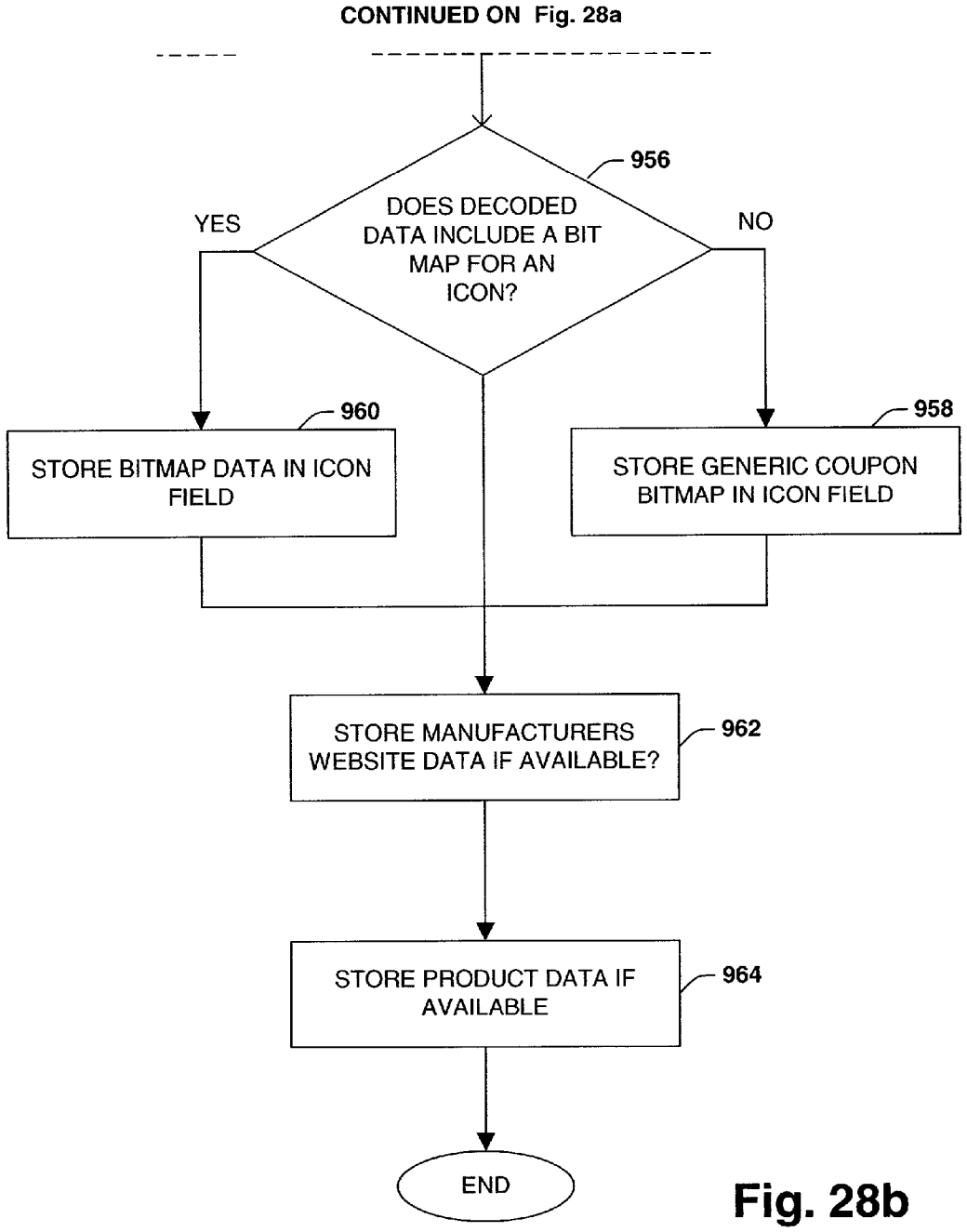
CONTINUED ON Fig. 28a
956
DOES DECODED DATA INCLUDE A BIT MAP FOR AN ICON?
YES
NO
960
STORE BITMAP DATA IN ICON FIELD
958
STORE GENERIC COUPON BITMAP IN ICON FIELD
STORE MANUFACTURERS WEBSITE DATA IF AVAILABLE?
962
STORE PRODUCT DATA IF AVAILABLE
964
END

Fig. 28b

PRODUCT DESCRIPTION	UPC CODE	PRICE QUOTE	PRICE TERMINATION DATE
PD_1	UPC_1	PQ_1	PTD_1
●	●	●	●
●	●	●	●
●	●	●	●
●	●	●	●
●	●	●	●
●	●	●	●
PD_Z	UPC_Z	PQ_Z	PTD_Z

970

Fig. 29

974

COUPON FILE-JOHN DOE

972

976

	32 OZ. TIDE	$0.75 OFF EXPIRES 10-31-97
	CAKE MIX	$0.50 OFF BY 9-31-97; $0.25 OFF BY 12-31-97
	GREEN BEANS	$0.25 OFF DOUBLE COUPON ON SUNDAYS
CAT	CAT FOOD	$0.25 OFF $0.50 OFF WITH LITTER
COUPON	MILK	$0.25 OFF EXPIRES 4-30-97

Fig. 30

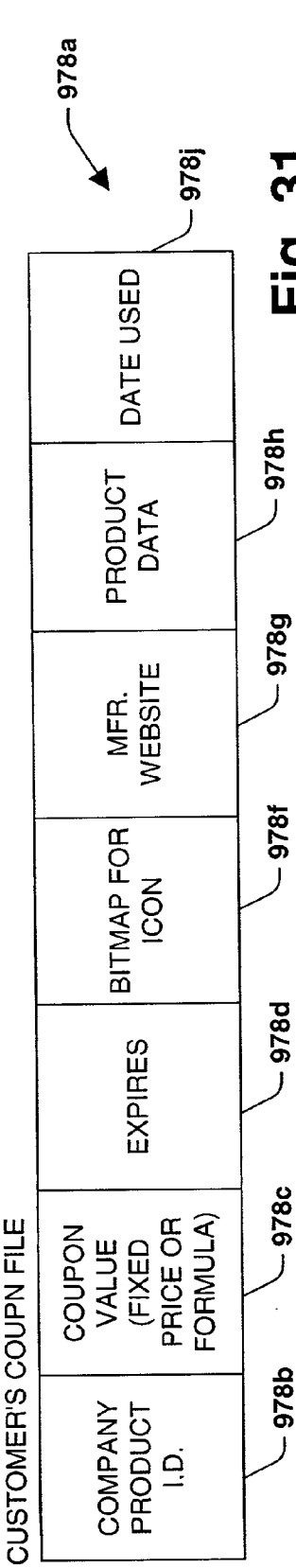

Fig. 31

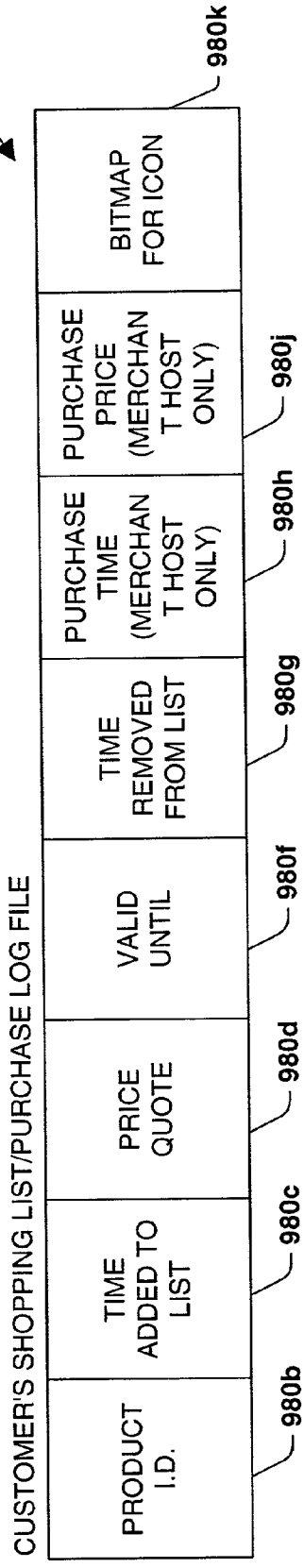

Fig. 32

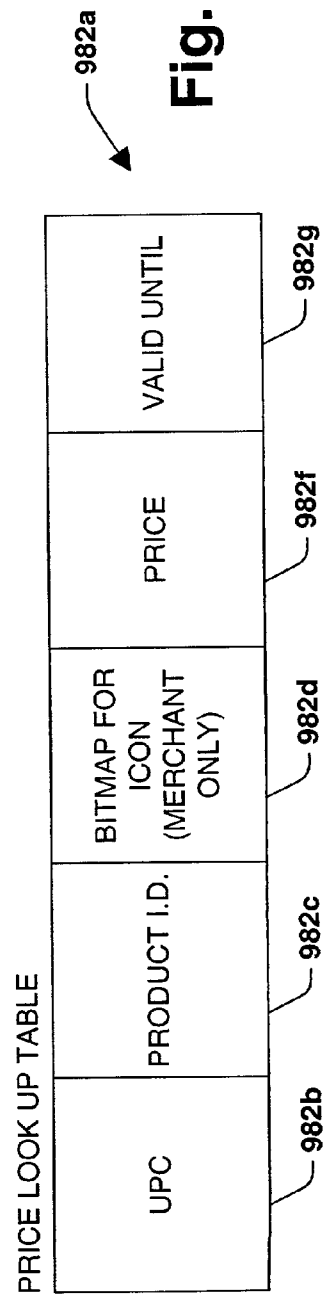

Fig. 33

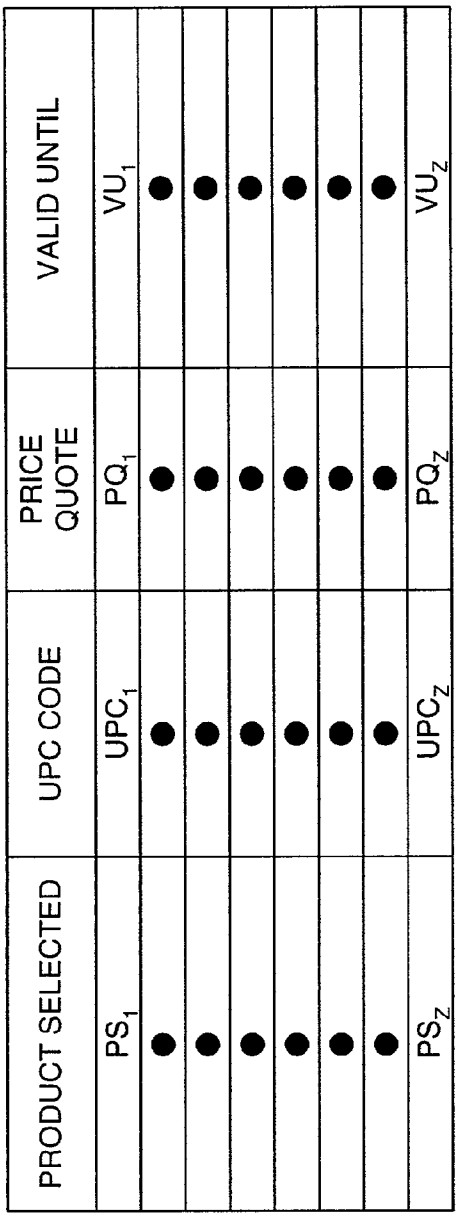
984
PRODUCT SELECTED
UPC CODE
PRICE QUOTE
VALID UNTIL
PS1
UPC1
PQ1
VU1
PSZ
UPCZ
PQZ
VUZ

Fig. 34

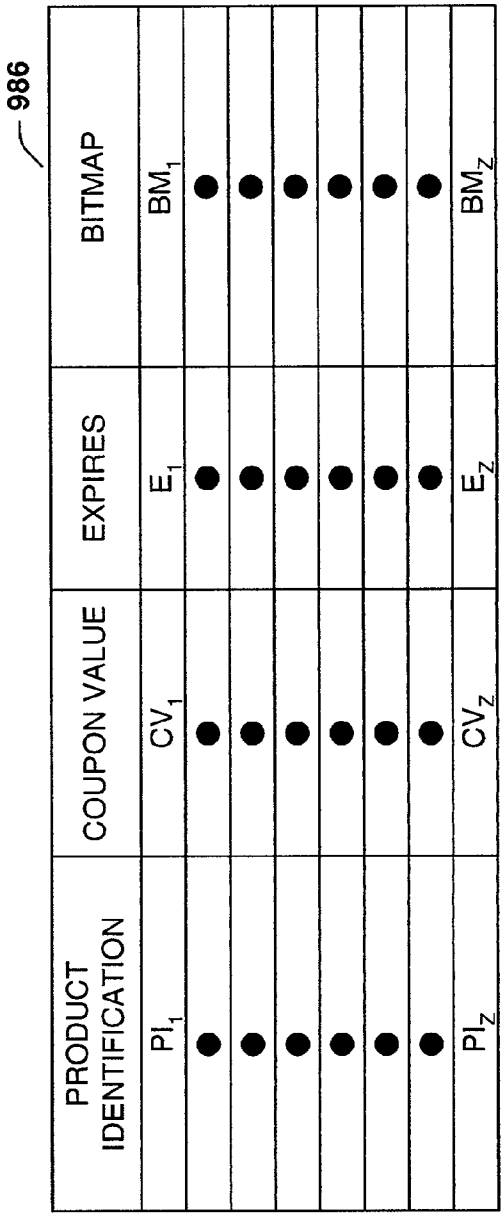
986
PRODUCT IDENTIFICATION
COUPON VALUE
EXPIRES
BITMAP
PI1
CV1
E1
BM1
PIZ
CVZ
EZ
BMZ

Fig. 35

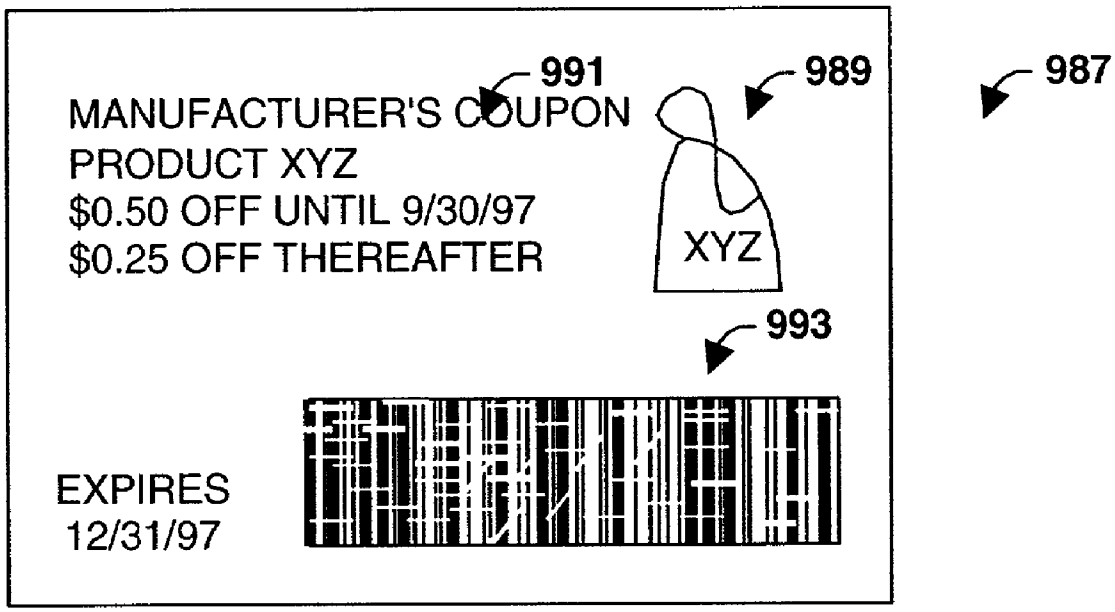
991
989
987
MANUFACTURER'S COUPON
PRODUCT XYZ
$0.50 OFF UNTIL 9/30/97
$0.25 OFF THEREAFTER
XYZ
993
EXPIRES
12/31/97

Fig. 36

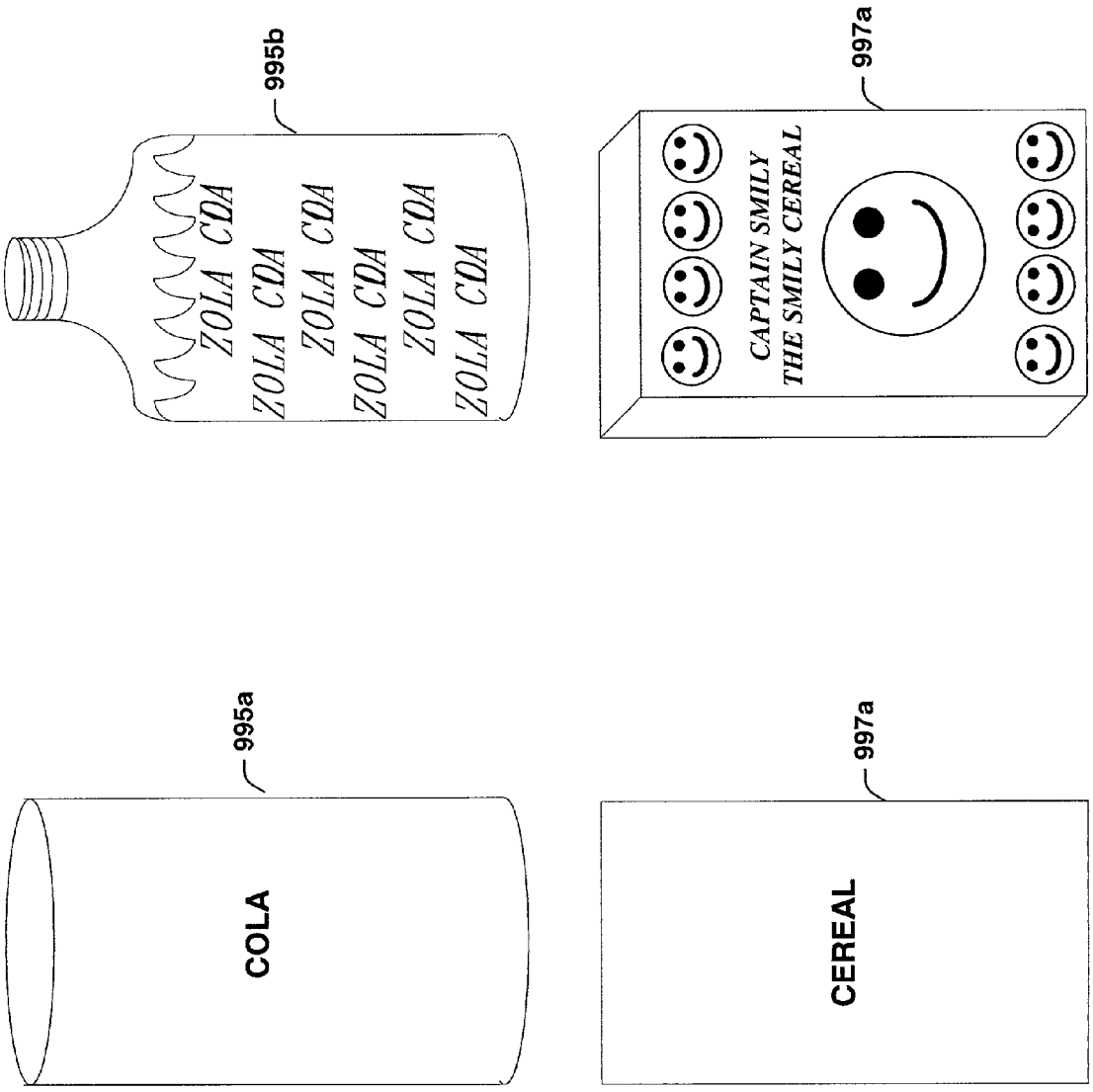
995b
ZOLA COLA
ZOLA COLA
ZOLA COLA
ZOLA COLA
ZOLA COLA
997a
CAPTAIN SMILY
THE SMILY CEREAL
995a
COLA
997a
CEREAL

Fig. 37

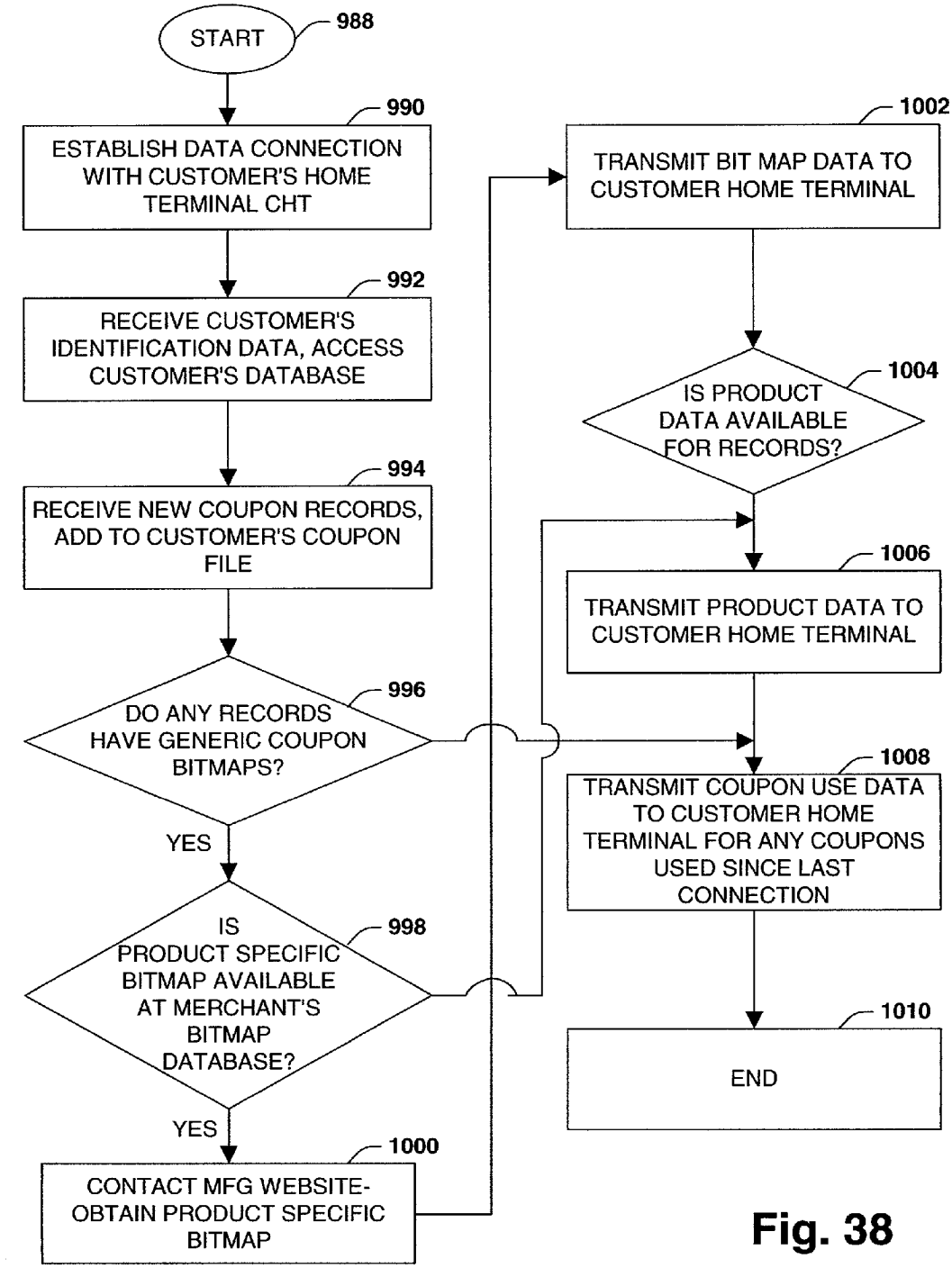
START
988
990
ESTABLISH DATA CONNECTION WITH CUSTOMER'S HOME TERMINAL CHT
992
RECEIVE CUSTOMER'S IDENTIFICATION DATA, ACCESS CUSTOMER'S DATABASE
994
RECEIVE NEW COUPON RECORDS, ADD TO CUSTOMER'S COUPON FILE
996
DO ANY RECORDS HAVE GENERIC COUPON BITMAPS?
YES
998
IS PRODUCT SPECIFIC BITMAP AVAILABLE AT MERCHANT'S BITMAP DATABASE?
YES
1000
CONTACT MFG WEBSITE-OBTAIN PRODUCT SPECIFIC BITMAP
1002
TRANSMIT BIT MAP DATA TO CUSTOMER HOME TERMINAL
1004
IS PRODUCT DATA AVAILABLE FOR RECORDS?
1006
TRANSMIT PRODUCT DATA TO CUSTOMER HOME TERMINAL
1008
TRANSMIT COUPON USE DATA TO CUSTOMER HOME TERMINAL FOR ANY COUPONS USED SINCE LAST CONNECTION
1010
END

Fig. 38

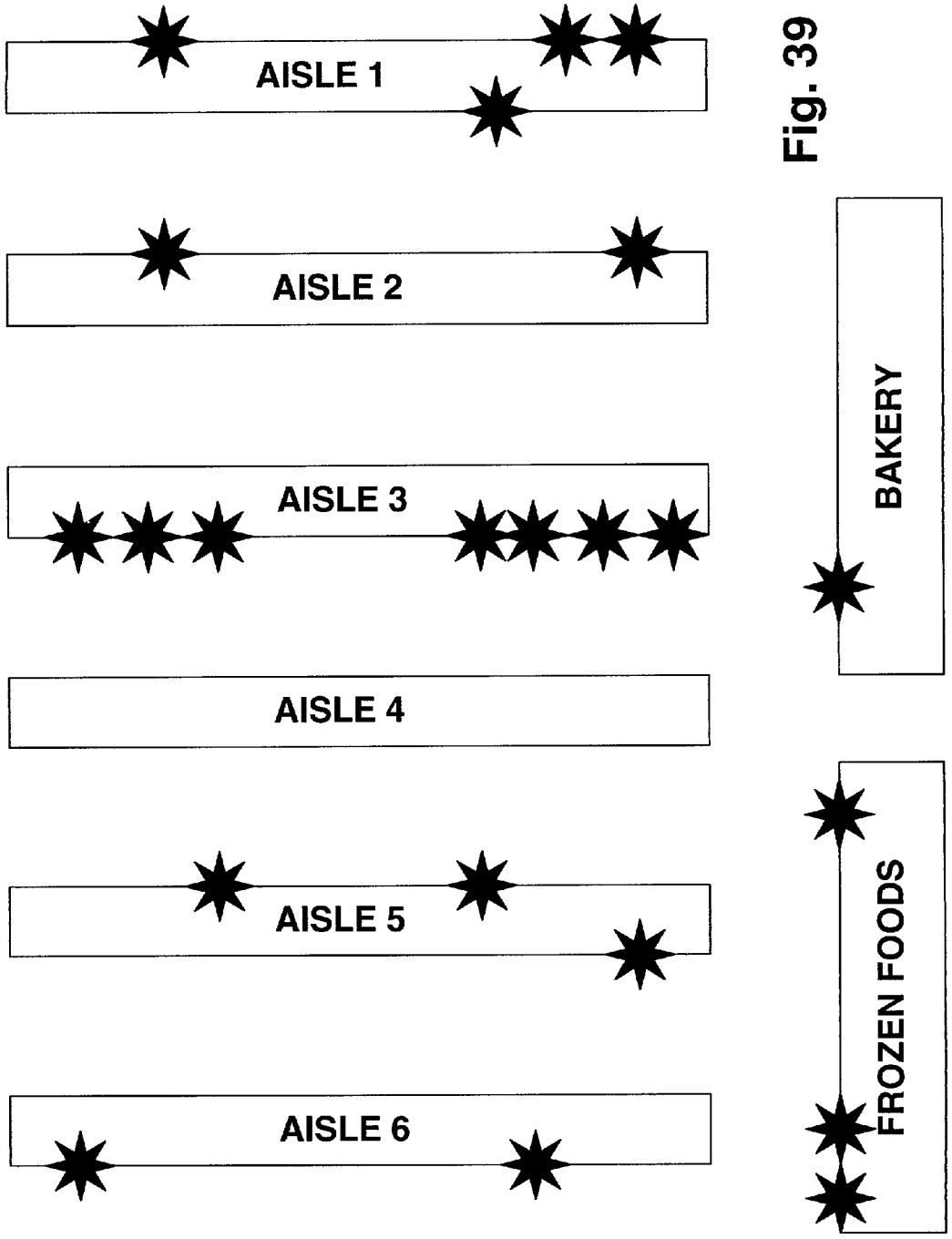
AISLE 1
AISLE 2
AISLE 3
AISLE 4
AISLE 5
AISLE 6
BAKERY
FROZEN FOODS

Fig. 39

SHOPPING ASSISTANCE SOFTWARE FOR USE ON MOBILE COMPUTERS USED BY CUSTOMERS IN RETAIL ESTABLISHMENTS

CROSS REFERENCE TO RELATED APPLICATIONS

[0001] This application is a divisional of copending U.S. patent application Ser. No. 09/861,836 filed May 21, 2001 and entitled ELECTRONIC SHOPPING SYSTEM, which is a continuation of U.S. patent application Ser. No. 08/921,235 filed Aug. 29, 1997 and entitled CUSTOMER INFORMATION NETWORK now U.S. Pat. No. 6,314,406, which is a continuation-in-part of U.S. patent application Ser. No. 08/770,690 filed Dec. 19, 1996 and entitled SHOPPING CART MOUNTED PORTABLE DATA COLLECTION DEVICE WITH TETHERED DATAFORM READER now U.S. Pat. No. 6,119,935, U.S. patent application Ser. No. 08/752,301 filed Nov. 19, 1996, U.S. patent application Ser. No. 08/744,109 filed Nov. 5, 1996 and entitled SHOPPING CART MOUNTED PORTABLE DATA COLLECTION DEVICE WITH TETHERED DATAFORM READER now U.S. Pat. No. 5,821,513, and U.S. patent application Ser. No. 08/668,343 filed Jun. 26, 1996 and entitled SHOPPING CART MOUNTED PORTABLE DATA COLLECTION DEVICE WITH TETHERED DATAFORM READER now U.S. Pat. No. 5,821,512.

TECHNICAL FIELD

[0002] This invention relates generally to a customer information network for a retail store and, more particularly, relates to a system for optically extracting indicia from a coupon and employing the extracted indicia within the network to facilitate customer shopping, manufacturer marketing and store efficiency.

BACKGROUND OF THE INVENTION

[0003] In most grocery stores and some retail stores, the typical procedure for obtaining products for many people involves clipping coupons at home, taking the coupons to the store, picking up a shopping cart, moving the cart up aisle after aisle looking for desired products and then taking the cart of found products to the cashier for payment. The procedure is repeated by many on a weekly basis oftentimes taking up a large portion of the day.

[0004] In order for a manufacturer to give a discount on a product, it may issue a printed coupon to be redeemed by the manufacturer via a retailer or provide for a rebate to be redeemed directly by the manufacturer. Coupons have been supplied through the mail or newspapers, on the product itself, or printed at a retail outlet. However, the newspapers and leaflets of coupons mailed or delivered to homes is the most common channel for delivering coupons to customers. In order to obtain a discount on a product, the printed coupon must be presented to the checkout station. The printed coupons redeemed by the retailer are sent to a clearing house that in turn separates the coupons and bills the respective manufacturer for reimbursement of the retailer.

[0005] This paper system has proven itself to be somewhat of a nuisance to customers as well as the retailers. The customers have to manually take scissors and clip desired coupons, sort them by product categories (e.g., detergents, canned foods, cereals, frozen foods, toiletries, etc.) in order to efficiently find the products when at the store. Furthermore, the customers have to periodically look through their many coupons to remove expired ones. On the other side, the retailers have to expend considerable man hours sorting coupons by manufacturer for redemption as well as monitoring for expired coupons at the check out station. However, most coupons go through a clearing house for sorting where the clearing house pays the retailer cash for the estimated value of the coupons, the difference between the estimated and actual amount be later credited or debited. Nevertheless, the retailer must still monitor for expired coupons and deal with collecting the coupons and sending them to the clearinghouse for payment.

[0006] Another problem associated with the paper coupon system is misredemption. For example, misredemption may occur through a consumer who expects a cooperative grocer to accept coupons without purchasing the item. In other instances, it may be the checkout clerk who brings coupons to work, puts them in the cash drawer and takes cash out. In some cases the retail store manager may pump substantial quantities of coupons in the redemption stream to reduce his "shrink". Misredemption of coupons is estimated to be as high as 20%-30%.

[0007] Another problem associated with typical shopping is finding the desired products. Oftentimes, customers will walk up and down the aisles in a hap hazard manner looking for items. For example, a customer may first look for a particular brand of cookies in aisle **5**, then move on to aisle **12** to find cereal only to have to return back to aisle **5** to find jelly. This process is repeated for many and possibly most customers, who cannot possibly remember where every product desired is located in the store. Moreover, even if the locations of the products are known, if the customer's coupons are not arranged according to categories and locations within the store, this may also force the customer to go back and forth between the aisles. If the coupons are not sorted and the customer does not know the locations then the problem is compounded.

[0008] Furthermore, manufacturers are faced with the problem of limited shelf space for advertisements of products within the stores due to the many numbers of products competing for valuable shelf space. The manufacturer desires to entice as many customers as possible to buy its products. This is done typically through advertisements and coupons. However, the paper coupon system is plagued with the aforementioned problems and the limited shelf space makes product marketing ever more difficult.

[0009] Additionally, the checkout system of grocery stores has problems. When the shopper is finished, he or she proceeds to the cash register/data terminal in a check out area of the store. The cash register/data terminal typically includes a hand held and/or fixed mounted dataform reading and decoding assembly (i.e., "dataform reader"). If a fixed mounted dataform reader is being used, a store clerk presents each item's bar code dataform to the dataform reader, that is, the dataform is moved along an upper surface of a glass window under which the dataform reader is mounted. If a hand held dataform reader is being used, the clerk "aims" the reader at each item's dataform as the item moves past the terminal. In each case, a "good read and decode" signal will be actuated after each successful dataform read and decode to notify the clerk that the item's dataform was

successfully read and decoded. The signal may be an audible tone or "beep". If no "beep" is heard, the clerk will repeat the reading process for the item until successful or else manually key enter the product.

[0010] A number of problems are associated with such a cash register/data terminal system including: (1) inconvenience for customers waiting in long check-out lines; (2) use of valuable floor space for the check-out area when a number of cash registers/data terminals are utilized; (3) human resource costs for attending to the checkout procedure; and (4) product prices have to be either printed on labels affixed to each item marked on shelving adjacent the item's shelf space so a customer knows the price of the item.

[0011] Thus what is needed is an improved shopping system which overcomes the above-mentioned problems associated with a paper coupon system; the difficulty associated with finding products in the store; the problems manufacturers face with advertising to customers; and the problems associated with conventional check-out procedures.

SUMMARY OF THE INVENTION

[0012] The following presents a simplified summary of the invention in order to provide a basic understanding of some aspects of the invention. This summary is not an extensive overview of the invention. It is intended neither to identify key or critical elements of the invention nor delineate the scope of the invention. Its sole purpose is to present some concepts of the invention in a simplified form as a prelude to the more detailed description that is presented later.

[0013] The present invention relates to a customer information network for use by customers in a retail environment. The present invention provides for a network where a host computer controls main operations of the system. The host computer is connected via the Internet or other network system to computers of customers and manufacturers. The store also includes a sub-network within the store which includes wireless access points, mobile terminals including bar code scanners tied thereto.

[0014] In the retail environment, the customer can use a shopping cart with a portable computing device (i.e., mobile terminal) attached thereto. The customer can identify himself/herself to the portable computing device. Once identified, the portable computer can assist the customer through the store for efficient shopping. The host computer via the access points and portable computer can guide the customer through the store in the most efficient manner. For example, the host computer can generate a map and protocol for the user to find the products desired without having to go back and forth through the store.

[0015] Furthermore, the customer can scan the products found at the store with the bar code scanner attached to the portable computing device before placing the products in the cart. The portable computing device can include a speaker and a graphic interface which manufacturers can use to advertise their products as well as provide information about its products to the customer. The retailers may also use the portable computing device to provide the customer with recipes, store advertisements, nutritional information, etc. Icons can be displayed by the graphical interface to promote the various products. The present invention can also be used to provide an easy link for the customer to the manufacturer's web site for product information.

[0016] The present invention may be employed by retailers and manufacturers to obtain demographics regarding product trends, customer behavior, purchasing activities, etc. Accordingly, the present invention provides a system which affords manufacturers with a way to better market their products and provide product information to customers at the customer's point of decision.

[0017] In accordance with an aspect of the present invention, a system and method for an information system for use by customers in a retail shopping environment are provided. The system includes a host computer and a portable terminal for use by a customer. The portable terminal is located within a retail environment and interacts with the host computer to access product information. A customer enters a request for product information via an input device. The portable terminal then transmits the customer request and receives the product information from the host computer. A processor is employed for generating a request or query related to the received product information; and both the product information and additional query information is then displayed to the customer.

[0018] To the accomplishment of the foregoing and related ends, the invention, then, comprises the features hereinafter fully described and particularly pointed out in the claims. The following description and annexed drawings set forth in detail certain illustrative embodiments of the invention. These embodiments are indicative, however, of but a few of the various ways in which the principles of the invention may be employed. Other objects, advantages and novel features of the invention will become apparent from the following detailed description of the invention when considered in conjunction with the drawings.

BRIEF DESCRIPTION OF THE DRAWINGS

[0019] **FIG. 1** is a block diagram of a customer information system and perspective view of a portion of a retail store utilizing the customer information system in accordance with the present invention;

[0020] **FIG. 2***a* is a perspective view of the customer information terminal as mounted on the shopping cart with a dataform reader of the device being employed in a presentation mode;

[0021] **FIG. 2***b* is a block diagram of an optical device in accordance with the present invention.

[0022] **FIG. 3** is a view, partly in section and partly in top plan, of the retractable, tethered data form reader of the customer information terminal of **FIG. 2***a;*

[0023] **FIG. 4** is a view, partly in section and partly in elevation, of the customer information terminal of **FIG. 2***a;*

[0024] **FIG. 5** is a schematic representation of selected electronic modules and circuitry of the customer information terminal in accordance with the present invention;

[0025] FIGS. **6-8** are perspective views of another embodiment of a customer information terminal in accordance with the present invention;

[0026] **FIG. 9** is a schematic representation of selected electronic modules and circuitry of the host computer, manufacturer's computer in accordance with the present invention;

[0027] **FIG. 10** is a flow chart representing processing steps of a customer information terminal in connection with a shopping session at a retail store using the device;

[0028] **FIG. 11** is a representative HTML page displayed on a touch sensitive display screen of a customer information terminal in accordance with the present invention;

[0029] **FIG. 12** is a table of programs and data stored at the host computer and/or customer computer in accordance with the present invention;

[0030] **FIG. 13** is a flow chart representing processing steps of the host computer in connection with verifying the validity of a customer ID and PIN number in accordance with the present invention;

[0031] **FIG. 14** is a main menu HTML page displayed on the touch sensitive display screen of the portable data collection device in connection with a shopping session in accordance with the present invention;

[0032] **FIG. 15** is a representative generic confirmation HTML page displayed on the touch sensitive display of the portable data collection device after an item's bar code data form has been read in accordance with the present invention;

[0033] **FIG. 16** is a flow chart representing processing steps at the host computer in connection with the customer information terminal scanning a bar code in accordance with the present invention;

[0034] **FIG. 17** is a flow chart representing processing steps of a portable data collection device in connection with a help routine for aiding a customer find a desired item in accordance with the present invention;

[0035] **FIG. 18** is a representative HTML page displayed on the touch sensitive display screen of a customer information terminal in connection with a routine for providing a recipe using a selected food item in accordance with the present invention;

[0036] **FIGS. 19*a*** and **19*b*** are flowcharts representing processing steps of a customer information terminal in connection with a routine for checking out items selected for purchase in accordance with the present invention;

[0037] **FIG. 20** is a flow chart representing processing steps of the host computer device in connection with a routine for providing a recipe using a selected food item in accordance with the present invention;

[0038] **FIG. 21** is a representative HTML page displayed on a touch sensitive display of a customer information terminal in connection with a help routine for aiding a customer find a desired item in accordance with the present invention;

[0039] **FIG. 22** is a representative screen layout displayed on the touch sensitive display screen of a customer information terminal in connection with a routine for permitting a customer to order a prepared item during a shopping session in accordance with the present invention;

[0040] **FIG. 23** is a representative HTML page representation of a search initiation page in accordance with the present invention;

[0041] **FIG. 24** is a state machine diagram of a customer home terminal in accordance with the present invention;

[0042] **FIG. 25** is a flowchart representing operation of a general web browser in accordance with the present invention;

[0043] **FIG. 26** is a flow diagram representing the process for a user to add an item to a product list according to one particular aspect of the present invention;

[0044] **FIG. 27** is a flowchart of consumer home terminal (CHT) operations upon connection to the host computer **12** with respect to interaction with a cookie in accordance with the present invention;

[0045] **FIGS. 28*a*-28*b*** is a flowchart depicting the coupon state in accordance with the present invention;

[0046] **FIG. 29** is a partial table representative of a product list in accordance with the present invention;

[0047] **FIG. 30** is an HTML page representation of a coupon file in accordance with the present invention;

[0048] **FIG. 31** is a packet format for a customer coupon file in accordance with the present invention;

[0049] **FIG. 32** is a packet format for a customer shopping list/purchase log file in accordance with the present invention;

[0050] **FIG. 33** is a packet format for a price lookup table in accordance with the present invention;

[0051] **FIG. 34** is a partial table representative of a shopping list in accordance with the present invention;

[0052] **FIG. 35** is a partial table representative of a coupon list in accordance with the present invention;

[0053] **FIG. 36** is an illustration of a manufacturer's coupon in accordance with the present invention;

[0054] **FIG. 37** is an illustration of generic icons and customized icons in accordance with the present invention;

[0055] **FIG. 38** is a flow chart relating to the obtaining of product specific bit map data from a merchants bit map database in accordance with the present invention; and

[0056] **FIG. 39** is an HTML representation of the locations with a store of products on a customer shopping list in accordance with the present invention

DETAILED DESCRIPTION OF THE INVENTION

[0057] The present invention is now described with reference to the drawings, wherein like reference numerals are used to refer to like elements throughout. In the following description, for purposes of explanation, numerous specific details are set forth in order to provide a thorough understanding of the present invention. It may be evident, however, that the present invention may be practiced without these specific details. In other instances, well-known structures and devices are shown in block diagram form in order to facilitate describing the present invention.

[0058] A customer information network **10** in accordance with a preferred aspect of this invention is represented in **FIG. 1**. Such a network would be installed for use in connection with a retail or grocery store, for example, where bar codes are read by a customer to rapidly input product and coupon data to facilitate throughout the shopping experi-

ence. The customer information network generally comprises a merchant's host computer **12**, an in-store portable transaction computer (PTC) **14**, a wireless local area network **16** including a plurality of access points **18**, and a wired backbone **20** for communicating data between the host **12** and the PTC **14**. The terms "portable transaction computer (PTC)" and "customer information terminal (CIT)" are used interchangeably throughout the specification and claims. An infrared portable transaction computer (IR PTC) position detection system **22** including a plurality of IR transmitters **24** generating a unique signature pattern which is detected by an IR receiver on PTC **14** when the PTC **14** is located within range of the transmitter **24** and a customer's home terminal (CHT) **26** is connecteable to the host computer **12** via a data channel **28**. The data channel **28** will typically be either a direct dial modem connection **28** or an internet connection **30** through an internet service provider (ISP) **32**. The network **10** may also include a plurality of manufacturer's servers **34**, each corresponding to the manufacturer of a product available at the merchant's store. Each manufacturer's server is communicatively coupled to the merchant's host **12** via the internet **30**.

[**0059**] The present invention advantageously makes use of standard Internet protocols including TCP/IP and HTTP. TCP/IP is a common transport layer protocol used by a worldwide network of computers. HTTP is a known application protocol that provides users access to files (which can be in different formats such as text, graphics, images, sound, video, etc.) using a standard page description language known as Hypertext Markup Language (HTML). Known HTML web browsers allow for graphical user interface (GUI) based access to HTML documents accessible on servers communicatively linked to the client. These documents are commonly referred to as "web pages".

[**0060**] Before discussing the operation of the network **10** in detail, a description of each component will be discussed. **FIG. 2***a* shows a perspective view of a first embodiment of a customer information terminal (CIT) **14** in accordance with the present invention. The CIT **14** is removably mountable to a shopping cart. The CIT **14** includes a housing **50** which is preferably made of metal, high strength plastic, or the like. Protruding from the bottom side of the housing **50** are mounting clips (not shown). The mounting clips afford for firmly mounting the CIT **14** to a shopping cart. Of course, it will be appreciated that the CIT **14** may be mounted in any of a variety of manners suitable for preventing dislodgement of the CIT **14** from a desired location. The housing **50** is adapted for easy disassembly to accommodate repair and replacement of parts such as batteries or lights for example.

[**0061**] The CIT **14** includes a display **52** such as a liquid crystal display (LCD) or the like. As is conventional, the display **52** functions to display data or other information relating to ordinary operation of the CIT **14**. For example, software operating on the CIT **14** may provide for display pricing information, inventory detail, etc. to a user on display **52**. Additionally, the display **52** may display a variety of functions that are executable by the CIT **14**. In the preferred embodiment, the display **52** displays graphics based alpha-numerical information such as for example the price of a product. The display **52** also provides for the display of graphics such as icons representative of particular products, for example. As will be discussed in greater detail below, the display **52** is controlled by electronic circuitry within the CIT **14**.

[**0062**] The CIT **14** further includes an operator input device **54** in the form of an integrated contact panel overlaying the display **52** which enables a user to enter data, information, function commands, etc. as is conventional. For example, the user may input information via virtual key buttons.

[**0063**] The CIT **14** also includes a speaker **62** for providing audible information to a customer, a printer system **64** advantageously disposed within the housing **50**, for discharging printed paper **66** through a slot **68** in the housing **50**, an antenna **78** for wireless communicating information with an RF access point **18**, and an IR transceiver **268** for communicating information with an IR access point.

[**0064**] Turning now to **FIG. 2***b*, IR transceiver **268** includes an optical window **70** for passing optical encoded information (e.g., infrared signals) from another device. An optical transmitter **74** and an optical receiver **76** are positioned to transmit and receive data through the window **70**, respectively. In the preferred embodiment, the optical transmitter **74** includes an emitter diode and the optical receiver **76** includes a detector diode. Transceiver **268** is selected to communicate with optical transceivers **124** (**FIG. 1**) positioned throughout the store in the ceiling or on top of bar poles. The detector diode is preferably provided with a narrow band color filter adapted to suppress incident radiation at all other wavelengths than those selected for the transmission.

[**0065**] The transceiver **268** is oriented so that its axes of reception and transmission are aligned (e.g., pointing upwardly toward transceiver **124**) in order to optimize communications with the transceiver **124**.

[**0066**] The transceiver **268** preferably is coupled to the CIT processor via a programmable serial interface device (SID) **75** such as a 16550 or 16450 UART (universal asynchronous receiver and transmitter) from National Semiconductor. Technically equivalent interface devices include but are not limited to universal synchronous and asynchronous receivers and transmitters (USARTs), asynchronous communications interface adapters (ACIAs), serial input/output (SIO) devices, data link controllers, multiple protocol communications controllers and serial communications controllers.

[**0067**] The serial interface device **75** receives data (typically in parallel format) from the CIT processor through a serial output location and transmits an equivalent serial bit stream to an encoder **77**. The encoder **77** transforms the bits into electrical pulses that occupy less than the full bit time and passes them to the optical transmitter **74** (e.g., infrared transmitter). The optical transmitter **74** transforms the electrical pulses into infrared light pulses for example and broadcasts the light pulses at a selected baud rate. The receiving side of the optical device **72** includes the optical receiver **76** (e.g., an IR receiver) that receives similar light pulses from a transmitter from another device and transforms them into electrical pulses. The optical receiver **76** passes these electrical pulses to a decoder **79** for decoding the electrical pulses into a serial bit stream. The decoder **79** in turn routes the bit stream to a serial input location on the

serial interface device **75** for communication to a CIT processor **248** (**FIG. 5**). The optical device **72** preferably operates in half-duplex mode (i.e., with only the optical transmitter **74** or optical receiver **76** active at any given time) in order to prevent the optical device **72** from receiving the data it transmits. However, it will be appreciated that with additional shielding, the optical device **72** could be operated in full-duplex mode (i.e., both the optical transmitter **74** and the optical receiver **76** simultaneously active).

[**0068**] It will be appreciated that the serial interface **75** may include or be coupled to a programmable baud rate generator (not shown) for transmitting the serial bit stream at selectable baud rates. The serial interface **75** also may include an SID clock (not shown) that runs at a multiple of the baud rate so as to clock the encoder **77** and decoder **79**. Accordingly, an operator of the host **12** could selectably control the optical transmission rate.

[**0069**] As can be seen in **FIG. 1, a** high capacity battery **80** which is mounted in a case disposed on a bottom rack **82** of the shopping cart **84** powers the CIT **14**. The battery **80** preferably uses lead-acid technology because of its low cost, high energy capacity and lack of memory effect. The weight associated with a lead-acid battery is not a concern because it is mounted on the cart **84**. A typical 6 volt, three cell lead-acid battery, such as the type used on a motorcycle, has an energy capacity sufficient to power the CIT **14** for a time period in excess of 24 hours. A power lead **86** connects the battery **80** to power circuitry (shown schematically in **FIG. 5**) in the CIT **14** which controls converting battery power to appropriate electrical parameters for operating the various components of CIT **14**.

[**0070**] The power circuitry **87** also includes charging circuitry and an external power supply port **89** for connecting external power supply for charging the battery. It will be appreciated that other suitable power systems, such as a photovoltaic system or hybridized power system may also advantageously be employed. Further, alternative shopping carts, such as motor-drive carts for the physically impaired, will have their own power plant which can be utilized to supply sufficient power for the CIT **14**.

[**0071**] Turning back to **FIG. 2***a*, the CIT **14** includes a dataform reader **90** which is retractably tethered or attached to the CIT **14** with an electric cable **92**. The dataform reader **90** is adapted to operate in at least two modes: a) a hand held mode; and b) a presentation mode. The hand held mode of operation is represented in **FIG. 2***a*, wherein the reader **90** is removed by the customer from an opening **94** in a side **96** of the housing **50** of CIT **14**. When supported in the opening **94**, the reader **90** extends slightly beyond the side of the housing **50** so that the customer can easily grasp a front portion of the reader **90** and slide it out of the opening **94**. The customer moves the reader **90** to a dataform **100** of an item so desired to be purchased or priced by the customer. The customer activates a suitable selector, such as depressing a trigger **102** to actuate an imaging assembly **103** (**FIG. 5**) and an illumination assembly **105** (**FIG. 5**) of the reader **90**. The illumination assembly **105** advantageously provides a uniform illumination pattern that substantially corresponds to an imaging area or field of view **110** of the imaging assembly **105** and additionally generates a more intense cross hair illumination pattern **112** to aid the customer in positioning the reader **90** so that the dataform **100** of an item is properly within the imaging area of the reader **90**.

[**0072**] The uniform illumination pattern and cross hair aiming pattern are rapidly alternated between off and on states, such that one is off while the other is on. This alternation of illumination patterns avoids the difficulty of having to decode a captured dataform image which has intense cross hair illumination patterns imposed thereon. The alternation of the illumination and cross hair patterns is rapid enough that it appears to the customer that the cross hair aiming pattern is continuously on.

[**0073**] While keeping the trigger **102** depressed, the customer aims the cross hair pattern **112** at a center of the dataform **100**. The customer moves the reader **90** toward the item until an audible tone or "beep" is emitted by the speaker **62** indicating the dataform **100** has been successfully read and decoded. The item's price, product name or description and product size will appear on the display **52** (this functionality will be discussed in more detail later). After the "beep" is heard, the reader **90** is returned to the opening **94** and slid into the housing **50**. It should be appreciated that the cable could be replaced by standard RF or IR wireless communication techniques.

[**0074**] In the presentation mode of operation shown in **FIG. 1**, the reader **90** is disposed in the housing opening **94** and the customer reads a dataform **100** affixed to an item by moving the item to the reader **90**. While the reader **90** remains in the housing opening **94**, a magnetic switch enclosed in a back portion of a reader module housing of the reader **90** is turned on by a magnet positioned in the opening **94**. Actuation of the magnetic switch causes the imaging assembly and the illumination assembly to remain actuated. Thus, the reader **90** is continuously able to read a dataform when it is disposed in the opening **94**. When a "beep" is heard, the customer knows that the dataform **100** has been successfully imaged and decoded. In this presentation mode, the illumination pattern is continuously on and the cross hair illumination pattern is deactivated since properly "aiming" the reader **90** is not a concern. A customer will typically pass an item by the reader to read a code much like a cashier passes an item over a common countertop scanner. The hand held mode is advantageously used when an item on a shelf is too large or too clumsy to move from the shelf or if the customer just wishes to check a price without removing the item from the shelf. The presentation mode is advantageously employed when a selected item is smaller and more easily handled.

[**0075**] **FIG. 3** is a cut-away view of the reader **90** and a portion of the CIT **14** in the region of the opening **94** showing more details of a recoil or cable retraction mechanism **120** of the dataform reader **90**. The reader module housing **50** is a modular unit that includes a top half and a mating bottom half. Only the bottom half of the reader housing is shown in **FIG. 3** so that the internal components of the reader **90** are visible. The reader **90** is connected to the housing **50** with cable **122**. The cable **122** includes the plurality of conductors for: a) coupling operating power to the reader **90**; and b) coupling the data signal on a control board to the reader **90**. The cable **122** is secured to the module housing **128** of the reader with a clamping grommet **130** to prevent the reader **90** from being physically separated from the cable **122**. To further secure the reader **90** to the cable **122**, a knot (not shown) may be tied in the cable just inside the reader housing **128**. The plurality of conductors **134** are electrically coupled to a printed circuit board **140**

within the reader housing **128** by a connector **144**. It should be appreciated that the reader and common RF/IR circuitry could be used to replace the cable.

[**0076**] The CIT **14** is advantageously weather-proofed to accommodate its being periodically exposed to the elements during periods of exposure, such as while in the parking lot. Within the housing **50**, the cable **122** is wrapped around a recoil spool **148**. The recoil spool **148** spins about a center pin **150** of the spool. The pin **150** is a hollow cylinder such that the cable **122** may be threaded through the pin **150** and connected to circuitry within the housing **50**. A spirally wound bias spring **154** is secured to join to the pin **150** at the center of the recoil spool **148** and to the spring tab **156** at the perimeter of the recoil spool **148** to bias the spool **148** in a counter clockwise direction (as viewed in **FIG. 3**). This arrangement keeps the cable **122** under tension when the reader **90** is removed from the house opening **94**. The edge formed by the housing wall and the side wall **96** is rounded to avoid wearing an outer surface of the cable **122**.

[**0077**] The reader **90** preferably utilizes a two-dimensional imaging assembly. The imaging assembly includes a two-dimensional photo sensor **180** and an optic assembly supported in a lens housing or shroud **182** for focusing an image of the dataform **100** in the field of view **184** onto the photo sensor array **180**. Conventionally available circuitry on printed circuit boards **190**, **192** and **140** operate to sequentially read out charges accumulating on photosensors of the photo sensor array **180**, generate an analog composite video signal, store a digital representation of a captured image, and decode the captured image to generate the decoded data signal. At least a portion of this image capture, image processing, and decoding circuitry may be implemented in code executed by a processor on the printed circuit board. The illumination assembly of the reader **90** includes four sets of illumination light emitting diodes ("LEDs") **200**, which are surface mounted in the preferred embodiment and positioned on a printed circuit board **202** (only two sets of the four sets of four illumination LEDs are seen in **FIG. 3**). The illumination LED's direct illumination through corresponding aligned lens portions **204** of a lens array **206** towards the imaging field of view **184**. Two targeting LEDs **208**, **210** operate to direct illumination through aligned apertures in board **210** and through aligned lens portion in the lens array **206** and generate the cross hair illumination pattern in the field of view **184** to assist the operator in relatively positioning the reader **90** and the dataform **100**. As noted above, the cross hair illumination pattern is only generated when the reader **90** is used in the hand held mode. A more detailed description of the components of a suitable two dimensional imaging assembly for a hand held dataform reader and its operation can be found in U.S. patent application Ser. No. 08/609,344, filed Mar. 1, 1996, and entitled PORTABLE DATA COLLECTION DEVICE WITH LED TARGETING AND ILLUMINATION ASSEMBLY, the contents of which are incorporated herein in its entirety by reference.

[**0078**] Referring now to **FIG. 4, a** printing assembly **64** is shown comprised of a thermal printer which functions to print out a paper receipt **66** for the customer at the completion of a shopping session or a recipe for an item. The printing assembly **64** discharges the receipt or the recipe printout through a slot shaped opening **68** in an upright front surface of the housing **50**. The thermal printer assembly **64** includes a thermal printhead **230** and an opposing platen **232** to position the paper **66** against the printhead **230**. A motor **234** drives a feed roller **236**. The feed roller **236** operates in conjunction with an idler roller **238** to draw paper **66** from a paper roll **240** past the printhead **230** and feed the receipt or recipe printout **66** out of the slot shaped opening **68** in the housing **50**. Printer driver circuitry **242** for operating the printer assembly components is mounted on the control printed circuit board **244** disposed in the housing **50**. At least a portion of the circuitry **242** is suitable embodied in code stored in a memory **246** represented by a memory chip and executed by the processor **248**, both on printed circuit board **244**. Thermal printing assemblies including these components are commonly available. It should be appreciated that the cost of the printer could be saved by placing common printers at convenient locations within the store. The CIT **14** would transmit data via the RF network **16** to a chosen common printer. The common printer will typically be chosen based on the location of the terminal within the store as determined by the location detection system.

[**0079**] The user interactive display screen **64** suitably includes a liquid crystal display ("LCD") panel and an overlying touch sensitive resistive contact panel as is commonly known. However, it will be appreciated that any variety of video display terminals, such as thin film transistor (active or passive), may suitably be used. Circuitry for operating the display panel and the contact panel includes LCD driver circuitry and contact panel driver circuitry on control board **244**. The circuitry for operating the LCD display and contact panels may, at least in part, be implemented in software stored in the memory **246** and executed by the processor **248**.

[**0080**] The housing **50** also supports the speaker **62** which is mounted behind a grated opening in the housing **50**. The speaker **62** is driven by audio indicator driver circuitry mounted on the control printed circuit board **244** and provides audio feedback suitably in the form of a ½ second "beep" to the customer to indicate a successful bar code dataform read and decode. The terminal **14** is secured to the cart pushing handle. The clamping assembly includes adjustable clamp and an accurate clamping surface of the housing **50**. Two sets of two threaded bolts (not shown) suitably extend between the clamp and threaded openings in the housing **50** to secure the adjustable clamp to the housing **50**. When the two sets of threaded bolts are tightened, the housing **50** is secured to the pushing handle of the cart.

[**0081**] Referring briefly to **FIG. 5**, in the preferred embodiment the CIT **14** includes a RF transceiver **161** for communication with access point **18** and thereby communication with the host computer **12** via a wireless local area network **16**. Each access point **18** includes a RF transceiver for wireless communication with a customer terminal **14** located within the cell. An appropriate access point is the Aironet 640 and appropriate RF circuitry for customer terminal **14** includes the Aironet 025, both available from Aironet Wireless Communications, Inc. of Akron, Ohio. Other acceptable wireless networks include any spread spectrum networks operating in accordance with IEEE802.11 Standard or infrared communication networks.

[**0082**] Referring back to **FIG. 4**, the spread spectrum radio communications circuitry **161** may be embodied in a PCMCIA card **262** mounted on the printed circuit board **244**.

An antenna lead **264** connects the communications circuitry to an antenna mast **266** extending through an opening in the upper surface of the housing **50**. Alternatively, the antenna mast **266** is suitably disposed inside the housing **50**.

[**0083**] Referring yet again to **FIGS. 1 and 2**, the infrared transceiver **268** is located on the top portion of the upper surface of the customer information terminal **14**. The receiver **268** detects the signature illumination pattern generated by each of a plurality of infrared transmitters **124** positioned throughout the store. It is anticipated that these transmitters **124** will be placed on top shelving or in the ceiling such that the signature pattern is detectable only within a predetermined area of the store **174** and **176**. Detection of a particular signature pattern indicates that the CIT **14** is within the predetermined zone of the store. Each emitter modulates the IR illumination source on and off in a distinctive ½ pattern. The infrared transceiver **268** includes a photo detector which generates an analog waveform in accordance with the distinctive illumination pattern which, based on thresholding, can easily be decoded into the signature pattern of ones and zeros in the IR receiver driver. Alternatively, any position locator, such as a transponder based system, may suitably be substituted for the above-detailed zone-based system and still accomplish the position detection.

[**0084**] **FIG. 5** is a block diagram of customer terminal **14**. The customer terminal **14** includes a processor **248** which is responsible for controlling the general operation of the CIT **14**. The processor **248** is programmed to control and operate the various components within the CIT **14** in order to carry out the various functions described herein. The processor or CPU **248** can be any of a plurality of processors, such as the p24T, Pentium 50/75, Pentium 60/90, and Pentium 66/100, Pentium PRO and Pentium 2, and other similar and compatible processors. The manner in which the processor **248** can be programmed to carry out the functions relating to the present invention will be readily apparent to those having ordinary skill in the art based on the description provided herein.

[**0085**] Coupled to the processor **248** is power supply circuitry **87** which is responsible for delivering power to the CIT **14**. As mentioned above, the power circuitry **87** also includes charging circuitry and an external power supply port **89** for connecting external power supply for charging the battery **80**.

[**0086**] The reader **90** is also coupled to the processor **248**. The reader **90** includes an imaging assembly **103**, an illumination assembly **105**, a trigger **102** and a magnetic switch **95** the operations of which have been described above. As noted above, the reader **90** is adapted for reading dataforms, namely in the way of two-dimensional bar codes.

[**0087**] The speaker **62** is tied to the processor **248** via an audio driver **300**. The speaker **62** serves to provide the customer with audible information as is conventional. The LCD display **52** and the contact panel **54** are connected to and controlled by the processor **248** via display driver circuit **303** and contact panel driver **305**, respectively.

[**0088**] A memory **246** tied to the processor **248** is also included in the CIT **14** for storing program code executed by the processor **248** for carrying out operating functions of the CIT **14** as described herein. The memory **246** also serves as a storage medium for temporarily storing information such as pricing information, advertisements, inventory or the like received from or intended to be transmitted to the access points **18** and/or host computer **12**. The memory **246** is adapted to store a complete set of the information to be displayed. According to a preferred embodiment, the memory **246** has sufficient capacity to store multiple sets of information, and the processor **248** could include a program for alternating or cycling between various sets of display information. This feature enables the display **52** to show rolling, scrolling or animation effects. Furthermore, the memory **246** will include information such that the processor **246** can affect IR coding and decoding; bar code decoding; a JAVA interpreter, a web browser, etc.

[**0089**] IR signal detection circuitry **72** is also coupled to the processor **246** via an IR receiver driver **153**. Image processing circuitry **311** and decoding circuitry **309** are also coupled to the processor **246**. The operation of such circuitry is well known in the art and thus further discussion related thereto has been omitted for sake of brevity.

[**0090**] FIGS. **6-8** shown an alternate embodiment of the CIT **14'** which is removably seated in a docking system on the shopping cart **84**. The CIT **14'** includes an interactive display screen **250** which suitably includes a liquid crystal display screen **252** with an overlaying or integrated contact panel **254**. A bar code reader **256** of construction, suitably similar to that described above, is mounted within the housing **258**. A printer system advantageously integrated in the housing **258**, and is suitably of similar construction to that described with reference to the CIT **14** described above. The printer (not shown) discharges paper **260** through a slot shaped opening **262** in the housing **258**. It should be appreciated that this device is architecturally the same as CIT **14**, however, it is physically constructed for removably mounting to the cart. As can be seen in **FIG. 8**, the CIT **14'** may be attached to a telescopic supporting mechanism **273** which allows for the CIT **14'** to be adjusted to a height suitable for interaction by the customer.

[**0091**] The terminal **14'** also includes a communications port **264** for coupling to the host it used outside the store for instance in the customer's home, and is the preferred embodiment for the customer home terminal **26**. The port **264** may be modem circuitry with an RJ II connector **266** for communication with an ISP via plain old telephone service subscriber loop **268**. Alternatively, in **FIG. 22** the port may include IRDA circuitry **270** and a LED/photo sensor **272** combination for infrared communication with an aligned IRDA port in a docking cradle (not shown) which subsequently includes modem circuitry. It will be appreciated that any physical/transparent layout scheme including integrated services digital network, asynchronous mode transmission, etc. may also be suitably employed.

[**0092**] **FIG. 9** is a block diagram of the architecture of the host computer **12** and manufacturer's computer **34**, respectively. The general structure of these computers is basically the same.

[**0093**] The system unit **350** includes a system bus or plurality of system buses **352** to which various components are coupled and by which communication between the various components is accomplished. The microprocessor **354** is connected to the system bus **352** and is supported by read only memory (ROM) **356** and random access memory

(RAM) **358** also connected to the system bus **352**. The ROM **356** contains among other code the Basic Input-Output system (BIOS) which controls the basic hardware operations such as interaction and the disk drives and the keyboard. The RAM **358** is the main memory into which the operating system and application programs are loaded. The memory management chip **360** is connected to the system bus **352** and controls direct memory access operations including, passing data between the RAM **358** and hard disk drive **362** and floppy disk drive **364**. The CD ROM **366**, also coupled to the bus system **352**, is used to store a large amount of data (e.g., multimedia program or large database).

[**0094**] Also connected to the system bus **352** are various I/O controllers: the keyboard controller **370**, the mouse controller **372**, the video controller **374**, and the audio controller **376**. The keyboard controller **370** provides the hardware interface for the keyboard **378**, the mouse controller **372** provides the hardware interface the mouse **380** (or other point and click device). The video controller **374** is the hardware interface for the display **382**, and the audio controller **376** is the hardware interface for the multimedia speakers **386**, **388**. A modem **390** enables communication over the network **30** to other computers.

[**0095**] The operating system **400** of the computer may be DOS, WINDOWS3.x, WINDOWS '95, OS/2, AIX, JAVA® or any other known and suitable operating system. The RAM **358** also supports a number of Internet access tools including, for example, the HTTP-compliant web browser **404**. Known software includes Netscape, Netscape Navigator, Mosaic, and the like. The present invention is designed to operate within any of these known or developing web browsers. The RAM **358** also supports other Internet services including simple mail transfer protocol (SMTP) or e-mail, file transfer protocol (FTP), network news transfer protocol (NNTP) or "Usenet", and remote terminal access (Telnet).

[**0096**] Operation of the Terminal Unit

[**0097**] Referring to **FIG. 10**, the CIT **14** operates as a modified TCP/IP web browser. When the shopping cart terminal is first powered, a default HTML page is requested from the host and, after received from the host is displayed on the screen at step **452**. Typically the default page will be a welcome form **450** and will graphically appear as **FIG. 11**.

[**0098**] This page includes fields **454** and **456**, virtual button **458** and 12 other buttons labeled 0-9, left arrow and right arrow, indicated generally at **460**. By including executable code in the HTML form page (using Sun Micro Systems Java programming code for example), each of these buttons, when activated by the user, functions as a virtual keyboard for manually entering a customer ID number. Alternatively, the operator may enter his or her customer ID number by reading a barcode or an ID card. The barcode reader circuitry decodes the data and enters it into a field using typical keyboard wedge emulation routines. The customer's PIN number is entered through the virtual keypad. Activating the enter button **458** calls a link defined in the HTML page which relays the ID number and PIN to the host **12** at step **470**, **FIG. 10**. For security, the transmission of the customer ID number and the PIN number may be encrypted using standard public key encryption techniques. The link is a TCP/IP data packet addressed to the host, and when received by the host, causes the host to launch a customer verification program (See **FIG. 12**) stored on the host **12**. The program verifies the customer ID number and PIN in fields **454** and **456** and returns a new HTML page to the CIT. The returning HTML page may be one of either an invalid ID page or the main menu page. The invalid ID page will typically include HTML code to self generate a link request for the welcome page **450** after predetermined period of time. A typical main menu HTML page is shown in **FIG. 15**. It may include a plurality of labeled buttons **480-486** which, if user activated, generates a link request for a selected sub menu page corresponding to the selected button at **470**. Each of the sub menu pages which, could be received at **472** will be discussed in more detail later.

[**0099**] At step **500** the system determines whether a bar code has been read. As discussed previously, the bar code reading system will be connected to the processor **248** through a data connection, such as a serial port which generates a software interrupt when a bar code has been successfully decoded. The interrupt triggers the processor **248** to transmit a barcode link request to the host at step **502**. The barcode link request is a TCP/IP data packet which includes the decoded data and instructions to the host **12** to launch a barcode program on the host. The barcode program will include a lookup of parameters associated with the code number and return of an HTML confirmation page associated with the product. Step **472** represents receipt of the page. Typically the confirmation page will be a generic page which enables the customer to verify his or her desire to purchase the product.

[**0100**] Alternatively the merchant may wish to use verification pages which include advertisements for promotional products when the bar code for particular products are read. These are referred to as product specific verification pages. The confirmation page includes field **510** which displays the product description and price. The page also includes button **512**, **514** and **516** which, if activated, cause the CIT **14** to transmit a link request **470** which launches a host program to either add the product to the customer purchase list, remove from the customer purchase list or to return to the main menu ignoring the read, respectively. Additionally, the page includes virtual buttons **518**, **520**, **522** and **524** which if activated cause the page to generate a link request **470** to a corresponding sub menu page.

[**0101**] Step **530**, represents a determination of whether the CIT **14** has moved to a new location in the store. The infrared receiver will typically be connected to the processor through a serial port. When the CIT **14** detects that it has moved to a new zone, the CIT **14** transmits a link request at step **532**. The request is a TCP/IP packed addressed to the host which includes the new location and instructions to launch a location program on the host. The location program determines whether to transmit a new HTML page to the CIT **14** or whether to return the same page as currently display (customer sees no change). Step **472** again represents receipt of the page. Typically a new page will be an advertisement which is associated with a product near the location of the CIT **14**.

[**0102**] Alternatively, the location detection system may be an RF system wherein a radio transceiver in a terminal interrogates and detects return signals from passive short range RF ID tags.

[**0103**] Step **534** represents a determination of whether the session has ended which typically would only be represented

by shutdown of CIT **14** to end the process at step **536**. If the session has not ended at **534**, the system **16** merely loops back to step **470** to continue the iterative process of sending link requests to the host and receiving HTML web pages in return.

[**0104**] It should be appreciated that a checkout routine does not end the session, but it is merely a link request from the main menu at step **470**. Furthermore, after a customer has successfully checked out, return to the introductory page for the next customer is also merely a link request at **470**. It should also be appreciated that more commonly used HTML pages may be stored locally on the CIT **14** to reduce air traffic.

[**0105**] Host Operation

[**0106**] **FIG. 12** is a table of a suitable setup of the host **12**. The host **12** includes storage of HTML web pages, databases, and programs launchable by CIT link requests. If the host **12** receives a link request from a client for a specific page, the host **12** merely returns the requested page. Alternatively, if the link request launches a program, the host executes the program and returns a page as determined by the program.

[**0107**] As can be seen from the foregoing, the CIT **14** basically generates link requests and receives return data. All programs associated with the system for interacting with the customer are stored and run on the host **12**. These programs will be discussed with reference to the flowcharts discussed below.

[**0108**] **FIG. 13** is a flowchart showing operation of the customer verification program at the host **12**. As previously discussed, activation of virtual button **458** or the welcome screen (**FIG. 11**) causes the terminal to send a link request to the host computer **12** which includes the customer ID number, the PIN number and instructions to launch the customer verification program. The program starts at step **550** which represents receipt of the link request from the customer terminal **14**. At step **552**, the host **12** looks up the customer ID number in the database, and, at step **554**, checks whether the ID number and PIN number combination is valid. If it is valid, the host **12** returns the menu page to the CIT **14** at step **556**. Alternatively, if the number is invalid, the host **12** returns an "invalid PIN number" page to the CIT **14** at step **558**. The program ends at step **560**.

[**0109**] As previously discussed, the customer can use the bar code reader to read a bar code which, in turn, causes the CIT **14** to transmit a link request to launch a bar code program at the host **12**. **FIG. 16** is a flowchart showing operation of the bar code program. The program starts at step **576** which represents receipt of link request from the CIT **14**. At step **578**, the system looks up the price and description corresponding to the UPC code in the price and description databases. At step **580**, the system determines whether the confirmation page to be associated with the particular product is generic or custom. Typically this will include looking up the UPC code in a list of products to associate with a custom confirmation page. If a generic page is used, the price and description are inserted into the appropriate fields of the generic page and the page is returned to the CIT **14** at step **582**. Alternatively, if a custom page is to be used, it is returned to the CIT **14** at **584** and the process ends at step **586**.

[**0110**] **FIG. 15** shows a sample of a generic confirmation page. The page includes message field **510** which includes a description of the product and its price. Message field **525** may be used to display other information about the product. For example, if the product is a tobacco product, the message field **525** may display the Surgeon General Warning. The page includes two virtual buttons **512** and **514** which if activated, cause the CIT **14** to transmit a link request to the host **12** which will launch the running total program at the host. The running total program will add or remove the item from the customer's running receipt as required by the link request. Virtual button **516** causes the CIT **14** to transmit a link request for the main menu HTML page. The page also includes virtual buttons **518**, **520** and **522** which if activated cause the terminal to transmit a link request to the host **12** or a particular HTML page associated with a product coupon, product information, or alternate product information, respectively. Virtual button **524**, if activated, causes the terminal **14** to transmit a link request which launches the recipe search program on the host **12**. A custom confirmation page would typically include the same virtual buttons, but may additionally include custom graphics related to marketing the scanned product or associated products.

[**0111**] **FIG. 17** is a flowchart representing the processing steps at the host computer **12** which add or remove the item from the customer's running total. The program starts at step **600** which represents receipt of the link request from the customer terminal **14**. The link request is a TCP/IP data packet addressed to the host **12** which includes instructions to launch the running total program and a data field indicating whether the item is to be added or removed from the customer's running total. Step **602** represents the host **12** determining based on the data field whether to add or remove the item from the customer's running total. If the item is to be added, the host **12** adds the item to the running receipt at step **604** and returns a main menu page to the customer at step **606** with updated running receipt totals in the appropriate fields. Alternatively, if the item is to be removed at step **602**, the host **12** removes the item at step **608** and returns an updated menu page at step **606**. The program ends at step **608**.

[**0112**] When the customer has finished shopping, the customer activates the checkout button on the main menu. Activation of the button causes the CIT **14** to generate a link request for the checkout page which is graphically shown at **620** in **FIG. 18**.

[**0113**] The checkout form page **620** includes virtual representation of the customer's receipt in field **622**. Virtual buttons with arrows **624** and **626** are used by the customer to scroll the receipt for viewing. The page includes virtual button **628** which, if activated by the customer, aborts the checkout routine by causing the CIT **14** to generate a link request for the main menu page. Virtual button **630** is activated by the customer to indicate the customer's wish to pay cash which causes the CIT **14** to transmit a link request to the host **12** to launch the cash checkout program. Virtual button **632** and **634** are activated by the customer to indicate the customer's desire to pay with a debit or credit card, respectively. Activation of these buttons causes the CIT **14** to transmit a link request to the host **12** to launch the debit/credit card checkout program.

[0114] **FIG. 19***a* is a flowchart representing the cash checkout program on the host **12**. The program starts at step **640** which represents receipt of the link request from the CIT **14**. At step **642** the host **12** returns a page to the CIT **14** which instructs the customer to proceed to the cashier. Step **644** represents receipt of confirmation from the cashier that the sale is complete. The cashier will typically have a cashier's terminal communicatively coupled to the host **12** via the network **20**. After receipt of the cashier's confirmation, the host will send a HTML page with a thank you message to the customer at step **646** and the program ends at **648**. Typically the thank you page will include a timer to generate a link request for the welcome page after a predetermined period of time. This positions the CIT **14** for the next customer.

[0115] **FIG. 19***b* is a flowchart representing the debit/credit card checkout program on the host. The program starts at step **650** which represents receipt of the link request from the CIT **14**. At step **652** the host returns a HTML page with instructions to the customer to swipe the magnetic stripe on his or her credit or debit card. Step **654** represents receipt of the credit or debit card number from the CIT **14**. After step **656** the program sends a confirmation page to the CIT **14**. The confirmation page includes virtual buttons for verifying the amount of the sale and entering a PIN number as appropriate for a debit card. Step **658** represents receipt of a data packet from the CIT **14** which includes the PIN number and the customer's confirmation. Step **660** represents obtaining card authorization from the appropriate card issuing authority. After authorization is obtained, receipt data transmitted to the customer along with a thank you message. The program ends at step **672**

[0116] As previously discussed, various customer assistance routines can be requested by the customer which include a recipe search routine, a location assistance routine and order of specially prepared items.

[0117] **FIG. 20** is a flowchart of operation of a recipe search program on the host. The CIT **14** can be activated to generate a link request to launch this program from either of the main menu page **490** (**FIG. 14**) or the confirmation page **523** (**FIG. 15**). The program starts at step **700** which represents receipt of the link request. Step **702** represents return of the recipe search form page to the customer information CIT **14**. **FIG. 21** shows a sample recipe search page **710** for obtaining search items. The page **710** includes a plurality of virtual buttons A-Z plus "space" (designated generally at **712**) which are supported by executable code such as Sun Microsystems Java which, when activated, operate to enter the designated letter into field **714**. The operator uses the virtual buttons to enter a search item. It should be appreciated that if the search program is requested from the confirmation page **523**, the product description may be automatically placed in field **714** and the virtual buttons **712** used for editing.

[0118] After entering the appropriate search term, the user activates either of virtual buttons **716** or **718** to generate a link request. The link request is a TCP/IP packet which includes the search term, instructions to launch the search and a field indicating whether the search is by title or ingredient. Step **720** represents determining whether the search is for an ingredient search or a title search. If an ingredient search, the host searches the recipe database at step **724** and returns the recipe search page with a list of matching recipes in scrollable field **726** at step **730**. Alternatively, if a title word search, the host searches the recipe database at step **732** and returns the recipe search page with the list of matching recipes in scrollable field **726** at step **730**.

[0119] Referring again to **FIG. 21**, the customer uses the arrow keys **732** and **734** to move a highlight bar **736** to highlight the desired recipe in the scrollable field. Virtual button **738**, if activated, causes the CIT **14** to generate a link request for the HTML page with the recipe printed thereon.

[0120] Referring back to **FIG. 20**, step **714** represents receipt of the link request from the CIT **14** for a specific recipe. Step **716** represents sending the recipe from the database to the CIT **14**. The host program then ends at **718**.

[0121] The HTML page which includes the recipe will typically include a virtual button which, if activated, causes the printer **64** to print a hard copy of the recipe for the customer. Furthermore, the page will include a virtual button which, if activated, causes the CIT **14** to make a link request to the main menu page or the confirmation page which was originally used to initiate the recipe search and another virtual button, which if activated will cause the ingredients to be added to the shopping list.

[0122] **FIG. 22** is a flowchart which represents processing steps at the host computer **12** when the customer elects the location assistance routine by activating virtual button **480** from the main menu **490** of **FIG. 14**. The program starts at step **750** which represents receipt of the link request from the CIT **14**. Step **752** represents return of the search initiation page to the CIT **14**.

[0123] **FIG. 23** shows a representation of the search initiation page **760**. The page **760** includes field **762** into which the customer enters the name of the desired product. The customer uses virtual buttons **764** to enter the product name. Simultaneously, all of the products available in the store are listed in scroll box **768**. A highlight bar **770** will be positioned over the first item in the list which matches the letters entered by the customer. The customer in addition to entering the product name via the virtual keyboard **764** can also move the highlight bar **770** over the desired item, virtual button **772** can be activated to initiate a link request for an HTML page which shows the items location in the store.

[0124] Returning to **FIG. 22**, step **780** represents receipt of a link request which includes the selected item at the host **12**. At step **782**, the host **12** looks up the items location in a database and at step **784**, selects a page which includes a map of the portion of the store that includes the desired product. Step **786** represents transmission of the map page to the CIT **14** and the program ends at step **788**.

[0125] As previously indicated, virtual button **484** of the main menu **490** of **FIG. 14**, may be activated by the customer to initiate programs for ordering prepared items. Activation of button **484** will generate a link request for a sub menu page which will list the types of items which may be ordered. It is anticipated that such items may include floral products, butcher shop products, bakery products or deli products. Each sub routine will typically include a series of HTML pages which interact with the customer to order a selected item.

[0126] The purpose of the customer home terminal is to enable the customer to access all of the services available through the CIT **14** in the store. The preferred embodiment would be the same hardware as shown in **FIG. 7** with the addition of a system for connecting to the merchant's host. Such systems may include a modem and RJ II Jack for either a direct telephone line connection to the merchant's host **12** or to an interet service provider **32** which provides an internet connection to the merchant's host, and a bar code scanner for scanning in coupons. However, it will be appreciated that the CHT can forms other than a personal computer such as form example be similar in architecture to a CIT **14**.

[0127] Referring now to **FIG. 24**, the CHT **26** is programmed to operate in accordance with the state diagram shown thereat. Briefly summarizing, the customer typically operates the CHT **26** for selecting shopping and product related menu options in the menu state **800**. The customer may access services provided by the host computer **12** by transitioning to the web browser state **802** via transition TI. When in the web browser state **802** and connected to the merchant's host **12**, all services can be accessed and the CHT **26** operates just like the CIT **14**. The customer may cause the CHT **26** to return back to the menu state **800** by way of transition T2. From the menu state **800**, the customer may move via transition T3 to a shopping state where he/she may enter items to add to the customer's personal shopping list **984**. The customer can return from the shopping list state **804** to the menu state **800** through transition T4. Furthermore, the CHT **14** includes a coupon state **806** which the customer may reach from the menu state via transition T5 wherein the customer may enter items to add to the customer's personal shopping list **984** or coupons to add to the customer's personal electronic coupon file while not connected to the merchant's host. The customer may return to the menu state **800** from the coupon state **806** via transition T6. When in the web browser state, the CHT **14** enters a cookie state **808** upon connection to the host computer **12** via transition T7. A cookie program updates the shopping list file and the coupon file at the merchant's host **12** and in the CHT **14** such that they match each time the CHT **14** connects to the merchant's host **14**. The CHT **14** leaves the cookie state **808** to the web browser state **802** via transition T8. The customer may exit the system by going to an off state **810** from the menu state **800** via transition T9. The customer may return to the menu state **800** from the off state **810** via transition T10.

[0128] **FIG. 25** relates to a general web browser in accordance with the present invention, and corresponds to the web browser state **802 (FIG. 24)**. At step **820** this aspect of the system is started and any necessary general initializations are performed. At step **822**, the system calls and obtains a default web page. The default web page is generally employed to provide at least some sort of graphical interface to the user. Typically, the default web page is designed to provide general information relating to the system as well as general promotional information relating to the store, for example. After the default web page has been obtained, the system in step **824** determines if the current web page has been requested to call a link. If yes, the system in step **826** tries to obtain the requested link. In step **828** the system checks to see if the time out period for connecting to the link has expired. If no, the system proceeds to step **830**. If yes, the system advances to step **832**. In step **830**, the system determines if the link connection has been made. If yes, the system returns to step **824**. If no, the system moves to step **826**. Returning back to step **828**, the system will loop through the timeout period for a predetermined time (e.g., 3 minutes). If the connection has not been made within the allotted time the loop times out wherein the system proceeds to step **832** as mentioned above. If in step **824**, the system determines that the current page has not called a link, the system proceeds to step **832** where it determines if the session has ended. If the session has been ended the system moves to step **834** and terminates the session. If the session is not ended, the system returns to step **824**.

[0129] **FIG. 26** is a flow diagram representing the process for a user to add an item to a shopping list according to one particular aspect of the present invention, and corresponds to state **804 (FIG. 24)**. At step **850** the system performs any general initializations necessary to carry out the following steps relating to **FIG. 26**. At step **850**, the system displays the user's current product list to the user. This list is a list of the products that the user intends or desires to purchase in the future. In step **852**, the user enters the product from his home terminal **26** into the system. The entry may be made by scanning the bar code **810** relating to the product or by manual entry by the user. In the case of bar code entry, the user can scan the bar code **810** from a coupon **987** for the product, for example. Another of the many possible ways for bar code entry would be for the user to scan a bar code **810** from an empty package or container of the product. Since the bar code **810** contains identifying indicia relating to the product, scanning the bar code **810** provides a quick and easy means for the user to enter the product. With respect to manual entry, the user can instruct the system that he/she desires to perform a manual entry. Any suitable method for making such a manual entry may be performed. For example, the user could type in key words and in response the system could provide a small list of items corresponding to the key words. Alternatively, the user could request to see an index of products carried by the store in order to make the manual selection.

[0130] In step **856**, the system retrieves the product data from its memory. Then in step **858**, the system displays to the user a confirmation page corresponding to the entered product. The confirmation page includes information relating to the product such as product price, product availability, coupons, discounts, term on coupons/discounts, etc. The confirmation page may also include a bit map image of the product in its packaging or possibly a bit map of a cooked version of the product to entice the user into selecting it.

[0131] In step **860**, the user decides whether or not to add the product to his/her shopping list **984**. If yes, the system proceeds to step **862**. If no, the system returns to step **852**.

[0132] In step **862**, after the product has been selected to be added to the customer shopping list **984**, the system creates a record with the product data. This record is created at both the host computer **12** and the customer computer **14**. In step **864**, the customer is displayed a current shopping list **984** with the added product. Next, the system moves to step **866** where the customer is prompted to remove any unwanted items from the shopping list **984**. If no, the system returns to step **852**. If yes, the system moves to step **868** where it confirms with the customer whether this is indeed an item that customer wants to remove from the list. If no,

the system returns to step **866**. If yes, the system proceeds to step **870** where the item is removed, and a record is created of the removal time and date. Preferably, this record is created only at the host computer **12**. Such removal data can be used by the store and/or manufacturers to perform a study on consumer behavior.

[**0133**] **FIG. 27** is a flowchart of consumer home terminal (CHT) operations upon connection to the host computer **12** with respect to interaction with a cookie, and corresponds to state **808** (**FIG. 24**). At step **900**, the CHT **14** performs any general initializations necessary to carry on the following steps. In step **902**, the CHT **14** establishes a data connection with the internet service provider (ISP) **32** (**FIG. 1**). After the ISP connection has been established, the system establishes a data connection with the merchant's host computer **12**. Once this connection has been established the system in step **906** prompts the user transmit his/her customer ID. After a valid ID has been entered and validated, the system moves to step **908**. In step **908**, the CHT transmits the host computer coupon records entered since the last connection. Typically, the coupons are scanned into the CHT by the user in the herein described manner prior to step **902**. However, the coupons may be entered (e.g., scanned) after step **906** and before step **908** if so desired.

[**0134**] Once the coupon records have been transmitted, the system in step **910** provides the CHT **26** with bit map data corresponding to the added coupons from the host **12**.

[**0135**] In step **912** the CHT **26** receives product data from the host **12** and updates the product data record at the CHT **26**; as mentioned above product data can correspond to price availability, discounts available, etc. Then in step **914** the system transmits to the user a coupon use data and update records. At this step the records of both the host computer **12** and the CHT **26** are matched and the consumer can view his/her coupon use. The coupon use data can also be employed by the store and manufacturers for tracking patterns relating to the coupon use by the consumer. After step **914**, the system proceeds to step **916**. In step **916** the user transmits shopping list records that have been added since his/her last connection. After step **916** the system compiles a shopping list **984** which is transmitted to the user, and received by the user in step **918**. This shopping list **984** includes all of the newly added records additionally the user provided with a purchase data since the last connection. In step **920**, the system provides the user of the CHT **26** with a product list update file which will contain the complete index list of all the products available. Then in step **922** the system returns to the web browser state **802** (**FIG. 24**).

[**0136**] Turning now to **FIGS. 28***a-b*, a flowchart is shown depicting the coupon state **806** (**FIG. 24**) with respect to the CHT **26**. In step **940**, any generalizations necessary to carry out the following steps are performed. In step **942** the coupon **987** is entered into the system by scanning and decoding of the coupon bar code **810**. In step **944**, the system determines if the coupon ID is already available or existing in the systems coupon file. If yes, the system proceeds to step **946**, where the system determines if the quantity of coupons is under the customer limit. If yes, the system proceeds to step **950**. If no, the system proceeds to step **948** where the consumer is notified that the coupon already exists. In other words, the consumer is notified that his or her limit has been exceeded with respect to that particular coupon. In step **950** a new record is created with respect to the scanned in coupon **987**. Once a new record has been created, the system proceeds to step **952** where the coupon value data is stored in a value field. Then, the system proceeds to step **954** where the coupon expiration data is stored in an expiration field. After step **954** has been completed the system proceeds to step **956** where it determines if the decoded bar code data includes a bit map for an icon (See **FIG. 37**) corresponding to the particular coupon **987**. If no, the system in step **958** stores a generic coupon bit map in the icon field. If yes, the system stores bit map data extracted from the decoded bar code data and stores this in the icon field. Next, the system proceeds to step **962** where the manufacturers web site data is stored if available. A manufacturer's web site data would also be obtained from the extracted or decoded bar code data. Then, the system would proceed to step **964** where it would store product data also from the bar code data if available.

[**0137**] **FIG. 29** shows a table representative of product list **970** in accordance with the present invention. The product list **970** includes information relating to every product available in the store. The information typically includes product description, UPC code for the product, product price, termination period for price quote, etc. The product list **970** may be stored in the memory **362***a* of the host **12**. All of the product information generally only occupies about 4 MB of memory, and thus this list **970** may be downloaded to the customer home terminal **26** for storage on its memory **362***c*. From the product list **970**, the customer can create a shopping list **984** (**FIG. 34**) in accordance with the present invention as is described herein.

[**0138**] It will be appreciated that the shopping list **984** and coupon list **986** are similar in nature to the product list **970** in that they are merely tables storeable in memory. The shopping list **984** will be a smaller version of the product list and include only those products that the customer wishes to purchase. The coupon list **986** is another table which includes information relating to the various coupons scanned into the CHT **26** by the customer.

[**0139**] Turning now to **FIG. 30, a** web page depicting a customer coupon file is shown. The coupon file page **972** shows various icons **974** graphically informing the customer as to the nature of the product the coupon **987** is to be used for. Next to the icons **974** are product descriptions **976**. Next to the product descriptions **976** is the value of the coupon and the expiration date of the coupons **987**. As can be seen, the Tide® coupon is worth $0.75 and the coupon expires on Oct. 31, 1997. The cake mix coupon is dynamic in nature in that it is worth $0.50 if used by Sep. 31, 1997 and worth $0.25 if used between Sep. 31, 1997 and Feb. 31, 1997. The green bean coupon is worth $0.25 unless it is used on Sundays when it is worth double ($0.50). The cat food coupon is also dynamic in nature in that it is worth $0.25 normally, but if the customer also purchases cat litter it is worth $0.50. The milk coupon operates like a typical coupon worth $0.25 which expires on Apr. 30, 1997. Thus, the customer can quickly view all of his/her coupons while shopping or preparing to shop as a result of the present invention.

[**0140**] It will also be appreciated that the electronic nature of the coupons in accordance with the present invention facilitates reduction of misredemption of coupons as men-

tioned above since the coupons are electronically tied to the purchases of a particular customer.

[0141] FIGS. **31-33** show exemplary packet formats for coupon files, shopping list/purchase files and price look up files. The coupon file packet **978***a* includes company product identification field **978***b*. A coupon value field **978***c* includes information relating to the value of the coupon **987**. This field **978***b* may include a formula for use in the case where the coupon value is dynamic in nature. An expiration field **978***c* includes data relating to when the coupon **987** expires. A bitmap icon field **978***f* includes data which may be used to generate an icon representing the product the coupon is to be used for. A manufacturer's website field **978***g* includes link information to the web site of the manufacturer which issued the coupon **987**. A product data field **978***h* includes information relating the product the coupon is to be used for. A date used field **978***j* includes data relating to when the coupon was actually used by the customer.

[0142] **FIG. 32** shows a customer shopping list/purchase log packet **980***a*. This packet includes a product identification field **980***b* which includes data for identifying the product. Field **980***c* includes data relating to the time the product was added to the shopping list **984**. Field **980***d* includes data relating to the price the product will be sold for. The valid until field **980***f* includes data relating to how long the price quote for the product will remain in effect. Field **980***g* includes data relating to when the product was removed from the shopping list **984**. Field **980***h* includes data relating to the time of purchase of the product. Field **980***j* includes data relating to what the customer paid for the product. Fields **980***h* and **980***j* include data which is only made available to the host **12** and possibly manufacturers **36**. This data can be used for consumer trend and behavior analysis. Field **980***k* includes data which may be used for the generation of an icon graphically representing the product.

[0143] Turning now to **FIG. 33, a** price lookup packet **982***a* is shown. Field **982***b* includes UPC data relating to the product. Field **982***c* includes product description data. Field **982***d* includes customized bitmap data used by the merchant only for the generation of a customized icon for the product. Field **982***f* includes product price data, and field **982***g* includes data relating to how long the price will be valid.

[0144] **FIG. 34** is a partial table representative of the shopping list **984**. The shopping list can contain a variety of data relating to the products selected for future purchasing. It is to be understood that the scope of the present invention is intended to include a shopping list **984** including all such data relating to the products selected.

[0145] **FIG. 35** is a partial table representative of the coupon list **986**. The coupon list **986** can contain a variety of data relating to the coupons selected for future use. It is to be understood that the scope present invention is intended to include a coupon list **986** including all such data relating to the coupons selected and data relating to the respective products and their manufacturer's.

[0146] As noted above, the present invention provides for a system which avoids many of the problems associated with a paper coupon system; the difficulty associated with finding products in the store; the problems manufacturers face with advertising to customers; and the problems associated with conventional check-out procedures.

[0147] One particular way the present invention accomplishes the above is by allowing for a customer to scan coupons at home with a scanner associated with the CHT **26**. The customer is able to modify data in a coupon file **986** (**FIG. 35**) by scanning the coupons into the home terminal **26**.

[0148] At the store, the customer can use a shopping cart with a portable computing device (i.e., CIT **14**) attached thereto. The customer can identify himself/herself to the portable computing device **14**. Once identified, the CIT **14** can assist the customer through the store for efficient shopping. The host computer **12** via the access points **18** and CIT **14** can guide the customer through the store in the most efficient manner. For example, the host computer **12** can generate a map (**FIG. 39**) and protocol for the user to find the products desired without having to go back and forth through the store.

[0149] Furthermore, the customer can scan the products found at the store with the bar code reader **90** attached to the CIT **14** before placing the products in the cart **84**. This aspect along with the avoidance of handing over paper coupons at checkout substantially reduces the length of time necessary at the check-out line.

[0150] The portable computing device **14** can include a speaker **62** and a graphic interface **52** which manufacturers can use to advertise their products as well as provide information about its products to the customer. The retailers may also use the portable computing device **14** to provide the customer with recipes, store advertisements, etc. Icons can be displayed by the graphical interface **52** to promote the various products. The present invention can also be used to provide an easy link for the customer to the manufacturer's web site for product information.

[0151] Referring now to **FIG. 36, a** manufacturer's coupon **987** is schematically shown in accordance with the present invention. The coupon **987** is typically printed on paper, however, any medium suitable for carrying out the present invention may be employed. The coupon **987** includes graphics **989** and text **991** as is conventional for providing a customer with information relating to the coupon **987** and the respective product the coupon **987** is to be applied against.

[0152] The coupon **987** also includes optically identifiable indicia **993**, which in the preferred embodiment is a two-dimensional bar code. However, it will be appreciated that any suitable optically identifiable indicia may be employed to carry out the present invention. The bar code **993** is a type of dataform which provides for originally encoded data to be recovered for further use in a variety of ways. For example, the bar code **993** may be scanned to derive reflectance values which are digitized, stored in buffer memory and subsequently decoded to recover data encoded in the bar code **993**. An image of the bar code or matrix code existing in a graphic image can be acquired by use of the scanner **420***c* or other suitable device which is capable of distinguishing between different reflectance values of light reflected from the dataform. Thus, for example, the bar code **993** typically includes black or dark colored bar type elements printed on a white or colored background area, with white or colored spaces between the bar code elements of the bar code. The spaces are typically the same color as the background area.

[0153] The present invention preferably employs a two-dimensional bar code which permits a greater amount of

encoded data to be stored in a given bar code area. Instead of having a coding area occupied by a single row of bar code, as in a 1D bar code dataform, a 2D bar code dataform divides the total coding area into a plurality of multiple rows of bar code. Additionally, more sophisticated coding strategies have been developed which permit a greater density of data as compared to the original width varying format of UPC bar codes.

[0154] A two-dimensional bar code dataform is disclosed in U.S. application Ser. No. 08/280,490 filed on Jul. 26, 1994, entitled "Packet Bar Code Encoding and Decoding" which is incorporated in its entirety herein by reference.

[0155] The coupon's 2-D bar code **993** may include information relating to the price of the product, the value of the coupon, the expiration date of the coupon, diminishing value data relating to the coupon, icon data, bit-map data, manufacturer's website link data, etc.

[0156] More particularly, for example, the value of the coupon may be diminishing in value over time. Thus, if the customer does not use the coupon **987** by a particular date the value of the coupon can diminish as time passes. In other words, the coupon **987** may be designed to be dynamic in nature where its value is tied to predetermined criteria such as time of use, use in conjunction with other products, frequency of use, etc. Additionally, when the coupon **987** is scanned it may have a generic bitmap as a place holder for the CHT **14** until it matches the actual bitmap for what the product is. For example, if the product is Tide® the actual bitmap will look like a bottle of Tide® as opposed to a generic laundry bottle bitmap which is obtained from the optically identifiable indicia on the coupon. However, the actual bit map can be obtained from the 2-D bar code label so that when it is scanned in the CHT has the bitmap right away. Thus, the manufacturer can incorporate the actual bitmap for Tide®, for example, into the bar code of the coupon.

[0157] The 2-D bar code **993** may also contain manufacturer web site data which the CHT **26** can employ to access the web site of a manufacturer who printed the scanned coupon. For example, if the customer desired to know more about a particular cola, the customer could employ the present invention to scan the cola bar code label with the CHT **14**. The bar code label having the website link for the manufacturer would be used by the CHT **14** to access the web page of the particular product. The manufacturer could also link the customer via the bar code information to a web page that advertises the particular product just scanned. It will be appreciated that the products themselves have bar codes thereon, and thus the customer could scan the bar code **993** on the product to reach similar results as described above with respect to the coupon bar code **993**.

[0158] **FIG. 37** shows examples of generic icons and customized icons in accordance with the present invention. Icons are small graphical images displayed on the screen that represent certain objects (e.g., products). The use of icons is particularly useful, since the operator can quickly identify a particular object simply by the shape and appearance of the icon. The icons of the present invention may be designed to be manipulated in a number of different ways, although the most typical is through use of a cursor control device (i.e., mouse) and a selection button located on the mouse. By manipulating the icon, the customer can access information and/or activate a program relating to a particular product, for example. The icon is typically displayed on the GUI as a static array of dots (i.e., pixels) on the display screen. Each icon is made up of an array of a number of display elements (e.g., small squares). By coloring some of the display elements black and others white, for example, a graphic image can be created. The graphic image created for each icon is stored in random access memory **358** or on a data storage device (e.g., bar code **993**) as an icon bitmap. Each bit in the bitmap that is set to a value of one corresponds to a black display element in the icon, and bits in the bitmap set to zero correspond to white display elements. It will be appreciated that any suitable manner for the creation of icons may be employed in accordance with the present invention. Reference relating to the generation of icons may be found in U.S. Pat. No. 5,586,237 entitled METHOD FOR GENERATING AND DISPLAYING CONTENT-BASED DEPICTIONS OF COMPUTER GENERATED OBJECTS, assigned to Apple Computer, Inc., which is incorporated herein by reference in its entirety. For sake of brevity further discussion relating to the generation of icons is omitted.

[0159] A generic cola icon **995***a* is shown which provides a bar bones graphical representation of a cola product. Such an icon requires little memory for storage and can be easily encoded on a two-dimensional bar code **993** of a coupon. A customized icon **995***b* is also shown for a cola product. The cola product is Zola Cola and the icon **995***b* is a graphical representation of the actual Zola Cola bottle. This icon **995***b* has much more graphical detail and thus requires more memory storage. The manufacturer may opt to encode the customized icon **995***b* on the bar code **993** of a Zola Cola coupon or may simply encode a tag within the bar code **993** which would draw the CHT to a link at either the host **12**, the ISP 32 or manufacturer's computer **36** to obtain the customized Zola Cola icon **995***b*.

[0160] Another generic icon is shown for a cereal icon **997***a*. Like the generic cola icon **995***a*, the generic cereal icon **997***a* is a low memory occupying bit-map image which may be encoded within the bar code **993** of a cereal coupon **987**. A customized icon **997***b* is shown for Captain Smiley Cereal. This customized icon **997***b* is also more detailed with respect to graphics than the generic cereal icon **997***a*. In the preferred embodiment, the manufacturer would encode a generic icon in the bar code **993** of the coupon **987**, and set up a link for the CHT **26** to retrieve to the customized icon and/or receive it from the host **12**, ISP 32 or manufacturer's server **36**.

[0161] The availability of such customized icons which may be displayed on either or both of the CIT **14** and CHT **26** provides for a way for manufacturer's to further draw customers to their particular product.

[0162] Turning now to **FIG. 38 a** flow chart is shown relating to the obtaining of product specific bit map data from a merchants bit map database. In step **988** any generalization necessary to carry out the following steps is performed by the system. In step **990**, a data connection is established between the customer's home terminal **26** and the host computer **12**. In step **992**, the system receives the customer's identification data and accesses the customer's database. In step **994**, the system receives the new coupon records from the customer home terminal **26** and adds that to the customer's coupon file. Then in step **996** the system

determines if any of the coupon records have generic coupon bit maps. If no, the system proceeds to step **998**. If yes, the system proceeds to **980** where the system determines if product specific bit map data is available at the merchant's bit map database. In step **998**, if such product specific bit map data is not available the system proceeds to step **996**. If however such data is available the system advances to step **1000**. In step **1000** the system contacts the manufacturer's web site to obtain the product specific bit map data. In step **1002** after the product specific bit map data has been obtained, such bit map data is transmitted to the customer home terminal **26** by the system. Then, the system advances to step **1004** where it determines if product data is available for records. If no, the system advances to step **998**. If yes, the system advances to step **1006** where such product data is transmitted to the customer home terminal. The system then advances to step **1008** where coupon use data is transmitted to the CHT **26** for any coupons used since the last connection.

[**0163**] One specific working example of the employment of the present example will now be provided for illustrative purposes only. It is to be appreciated that the present invention is not intended to be limited to only such an example, and that various iterations, combinations and variations of this example fall within the scope of the invention.

[**0164**] The present example relates to a customer deciding to go shopping in the near future. The customer may take the coupon section out of the Sunday paper for example and go to his home terminal **26**. After activating the home terminal **26** so that it will operate in accordance with the present invention, the customer can peruse through the coupon section of the newspaper in search of coupons to be used for shopping. As desired coupons are found, the customer can scan the coupons into the computer via the scanner **420***c* (**FIG. 9**). As the coupons are scanned in they are added to a coupon file stored in the CHT **26**. Additionally, as the coupons are scanned in, graphical and textual information relating to the coupon and the related is product is depicted on the screen. This information is primarily obtained from the information encoded on the bar code **993** of the coupon **987**.

[**0165**] As mentioned above, the two-dimensional bar code **993** may contain information such as the value of the coupon, its diminishing value, expiration date, product identification information, generic and/or manufacturer specific icon information, etc. Typically, only generic iconic information is encoded on the bar code **993** due to memory constraints. However, once the customer is linked to the merchant host computer **12** or the ISP 32 which provides manufacturer specific information, a customized icon (**FIG. 37**) will be made available to the customer. It will be appreciated that the manufacturers of products have an interest in attracting consumers to their products, and thus many will provide ISPs with customized icons to provide to customers for viewing.

[**0166**] After the customer has completed scanning in the coupons **987**, he/she may decide to review his/her shopping list **984** and make additions or deletions. Also, as the coupons **987** are being added, the customer will be prompted if a coupon relating to a product is not found in the shopping list **984**. The customer will then be prompted to add or not add the product to the shopping list **984**. When making or updating the shopping list **984**, the customer can view a store product list **970** containing information relating to every product available in the store. As mentioned above, this product list **970** generally only occupies 4 MB of memory and thus can easily be stored on the customer's home terminal **26**. The product list **970** will contain such data as UPC code, product description, price, duration of price, possibly generic icon data, etc.

[**0167**] After the shopping list **984** is completed, the customer can connect to the merchant's host computer **12** through the Internet, direct dial or any suitable manner. Once connected to the host computer **12**, the coupon file, shopping file and product information between the host **12** and the CHT **26** will be compared and an updating will occur. The host **12** will update its version of the customer's coupon and shopping list **984**. The host **12** will also update the CHT's product list. The updating process will thus coordinate the files of both computers so that obsolete or invalid data is removed and both computers are current and consistent with respect to the various files.

[**0168**] More particularly, the customer's coupon file master is stored at the host computer **12**, but because the host **12** and the CHT **26** are not connected all the time there has to be a duplicate stored at the customer's home terminal **26** and every time the host **12** and CHT connect a compare is done to update both files. If the customer has been shopping recently and some of the coupons have been used they will be removed from the coupon list file.

[**0169**] Once the coupon **987** is used, it will no longer show up in the file. This also prevents the customer from going home and scanning the coupon **987** again using it a later day. The coupon **987** can build into the bar code **993** information a limit as to how many times a customer may use the particular coupon **987**. However, if the manufacturer is still obtaining its gross margins despite the coupon **987**, the manufacturer may allow for the coupon **987** to be used an unlimited number of times within a given time period.

[**0170**] With respect to the shopping list **984**, the customer can add things to the shopping list **984** from home as described herein. For example, when a coupon is scanned the processor **354** will prompt the customer to see whether the item should be added to the shopping list **984** as well. Or if a customer has used his/her last can of green beans he an scan it into the CHT **26** to add more green beans to shopping list **984**. Again, the shopping list **984** at the host **12** and at the CHT **26** is updated every time they are connected. If the customer has just shopped, items will be removed from the list and if items are scanned in for adding they will be added to the list. The shopping list **984** requires the product ID code; the time the product was added to the shopping list **984**; and a price quote.

[**0171**] The shopping-list **984** will provide prices for products, and for how long that price is valid for. Then when the customer actually shops, he will pay the lower of the price the product is being offered at the store or the quoted price as long as the customer is in the time frame. Thus, the price quote remains in effect for the period of time noted to the customer.

[**0172**] Once the product is purchased the record relating thereto on the CHT **14** is deleted. However, the full record

relating to the customer's interest in the product is maintained by the host computer **12**. This full record can be used by manufacturer for use in forecasting consumer trends and tracking consumer purchasing behavior.

[**0173**] Once the procedure at home is complete, the customer can go to the store at his/her leisure to obtain the products. When entering the store, the customer will pick up a cart **84** which has a customer information terminal (CIT) **14** mounted thereto in the manner discussed above. After the customer has properly logged on to the CIT **14**, the host computer **12** will send the CIT **14** information relating to the particular customer. Such information will include the coupon file, the shopping list file, etc. The CIT **14** can display the location of the products within the store that are on the customer's shopping list **984** as shown in **FIG. 39**. In this way, the customer is avoided the problem of searching for hard to find products. As a result, the customer will only have to make a single pass through every aisle as opposed to haphazardly going back and forth between aisles.

[**0174**] Additionally, the CIT **14** can display customized web pages made by manufacturers of the products on the customer's shopping list **984**. Also, as the customer is walking along an aisle, for example, a proximity sensor detecting the presence of the CIT **14** could trigger the display **52** to show a web page relating to the sale of a particular product within the vicinity of the customer.

[**0175**] As the customer picks up products and scans them into the CIT **14**, the shopping list **984** and coupon list **986** are updated to reflect the activity. If a customer decides to place the product back, the customer simply rescans the product and instructs the CIT **14** to remove the product. This step results in the shopping list **984** and coupon list **986** being updated to include the product again.

[**0176**] Once all of the products have been found by the customer, the customer can instruct the CIT **14** that the shopping has been completed. The CIT **14** can transmit this information to the host computer **12**. The CIT **14** will prompt the customer as to what type of payment method (e.g., cash, check, charge, etc.) will be used. The host computer **12** will then select the next cashier available to process the customer's shopping cart. In this manner, the long lines at the cash register are reduced.

[**0177**] Thus, the present invention provides for avoiding many of the hassles associated with conventional coupon systems (e.g., clipping coupons) as well as retail and grocery store systems. The present invention makes shopping easier, faster and more enjoyable for customers. The present invention also reduces the costs associated with misredemption of coupons. Furthermore, the present invention provides a system which provides manufacturers with a way to better market their products and provide product information to customers.

[**0178**] It is, of course, not possible to describe every conceivable combination of components or methodologies for purposes of describing the present invention, but one of ordinary skill in the art will recognize that many further combinations and permutations of the present invention are possible. Accordingly, the present invention is intended to embrace all such alterations, modifications and variations that fall within the spirit and scope of the appended claims.

What is claimed is:

1. An information system for use by customers in a retail shopping environment, comprising:

a host computer that stores and accesses product information; and

a portable terminal for use by a customer that interacts with the host computer within a retail environment, the portable terminal comprising:

an input device that provides for input of a customer request;

a transceiver that transmits the customer request and receives the product information from the host computer;

a processor that generates a request or query related to the received product information; and

a display that displays the product information and additional query information related to the generated request to the customer.

2. The information system of claim 1, the processor including a computer program activated by the customer.

3. The information system of claim 1, the input device comprising a touch panel that allows the customer to enter requests or queries for product information and additional information.

4. The information system of claim 1, further comprising a bar code reader coupled to the terminal that allows the customer to enter requests or queries for product information and additional information.

5. The information system of claim 1, the portable terminal employing a web browser that displays the product information and the additional query information via at least one web page.

6. The information system of claim 5, the at least one web page being a Hypertext Markup Language (HTML) document.

7. The information system of claim 1, the portable terminal further comprising a printer that prints the product information and the additional query information.

8. The information system of claim 1, the input device comprising a plurality of virtual buttons that transmit a link request to the host computer to launch a search program.

9. The information system of claim 1, the additional query information being at least one of: custom graphics related to marketing the product, associated products, manufacturers' website link data, coupons for the product, recipes for the product, and a location of the product in the retail environment.

10. The information system of claim 1, the host computer storing a record of the customer's activities to forecast purchasing trends and to track a purchasing behavior of the customer.

11. The information system of claim 10, the processor generating the additional requests or queries further in response to the forecasted purchasing trends and purchasing behavior of the customer.

12. A method for employing an information system for use by customers in a retail shopping environment, comprising:

transmitting a first request to a host computer from a portable terminal within the retail shopping environment;

receiving product information based on the first request from a database in the host computer;

receiving additional query information associated with the requested product information; and

displaying the requested product information and the additional query information to a customer.

13. The method of claim 12, the requested product information and the additional query information being displayed in at least one Hypertext Markup Language (HTML) web page.

14. The method of claim 13, further comprising, generating a second request for product information in response to the information displayed in the at least one HTML web page.

15. The method of claim 12, the additional query information being received in response to the product information displayed to the customer.

16. The method of claim 12, further comprising:

generating a second customer request based on the requested product information displayed to the customer;

receiving information based on the second customer request; and

displaying the information based on the second customer request to the customer.

17. The method of claim 12, further comprising, in response to the requested product information displayed: adding a product to a purchase, declining to purchase the product, or requesting further information about the product.

18. The method of claim 12, further comprising, in response to the additional query information displayed: adding a product to a purchase, declining to purchase the product, or requesting further information about the product.

19. The method of claim 12, further comprising, printing the requested product information from the remote terminal.

20. The method of claim 12, further comprising, generating a shopping list based on the product information displayed to the customer.

21. The method of claim 12, further comprising, maintaining a record of the customer's activities to forecast purchasing trends and purchasing behavior of the customer.

22. The method of claim 21, further comprising, displaying product information to the customer based on the forecasted trends and purchasing behavior of the customer.

23. An information system for use by customers in a retail shopping environment, comprising:

a host computer including means for storing product information and means for retrieving the product information; and

a portable terminal for use by a customer that interacts with the host computer, the portable terminal comprising:

input means for the customer to input a first customer request for the product information;

display means for displaying the product information to the customer; and

query means for generating a second customer request or query for additional product information from the host computer based on the product information displayed.

24. The system of claim 23, further comprising, means for forecasting customer trends and purchasing behavior.

* * * * *