Dec. 26, 1944. C. B. HAYES ET AL 2,366,105

STOP MEANS FOR TEXTILE MACHINES

Filed Feb. 8, 1944 3 Sheets-Sheet 1

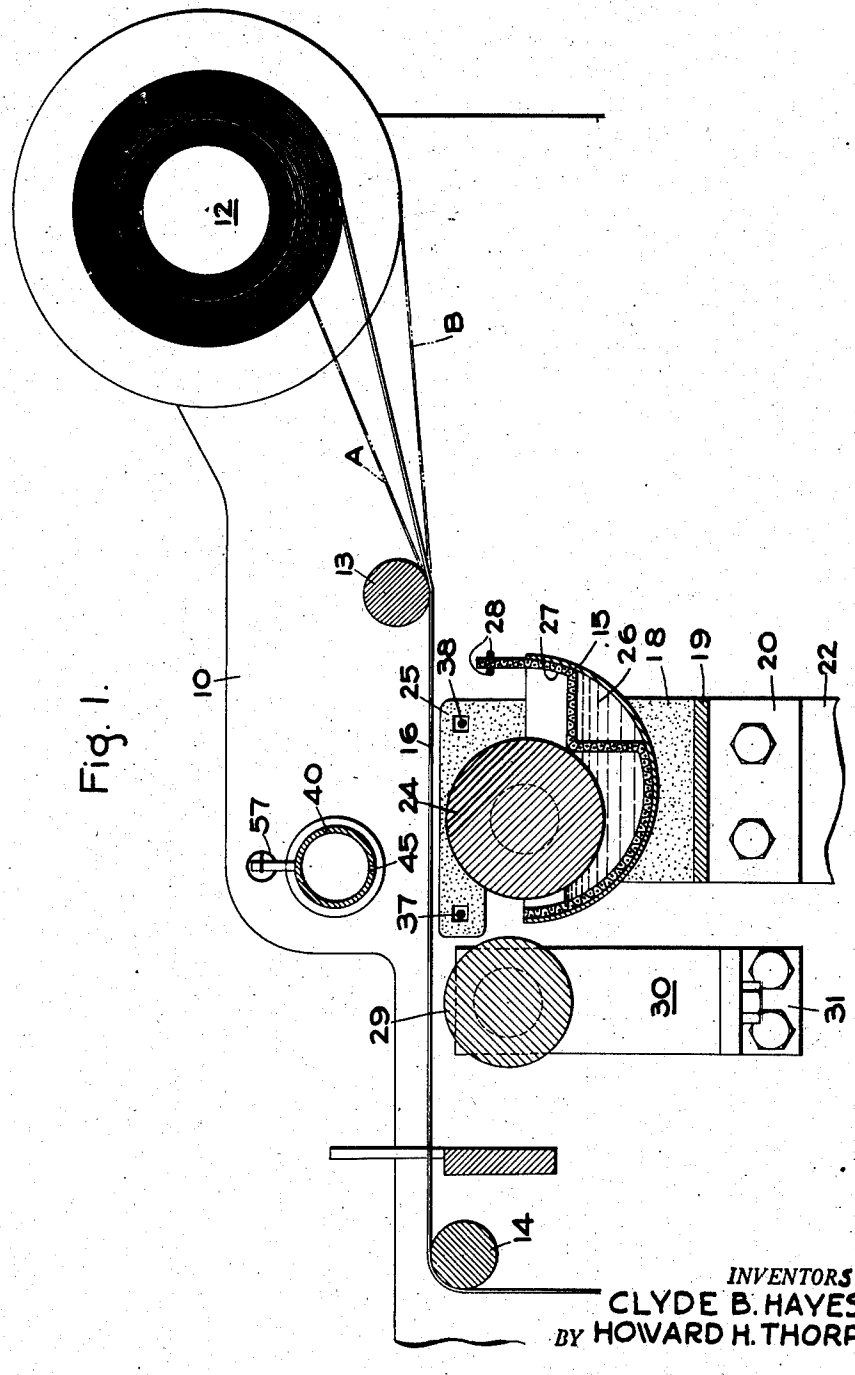

Fig. 1.

INVENTORS
CLYDE B. HAYES ET AL
BY HOWARD H. THORPE

Beau, Brooks, Buckley & Beau.

Dec. 26, 1944. C. B. HAYES ET AL 2,366,105

STOP MEANS FOR TEXTILE MACHINES

Filed Feb. 8, 1944 3 Sheets-Sheet 2

Fig. 2.

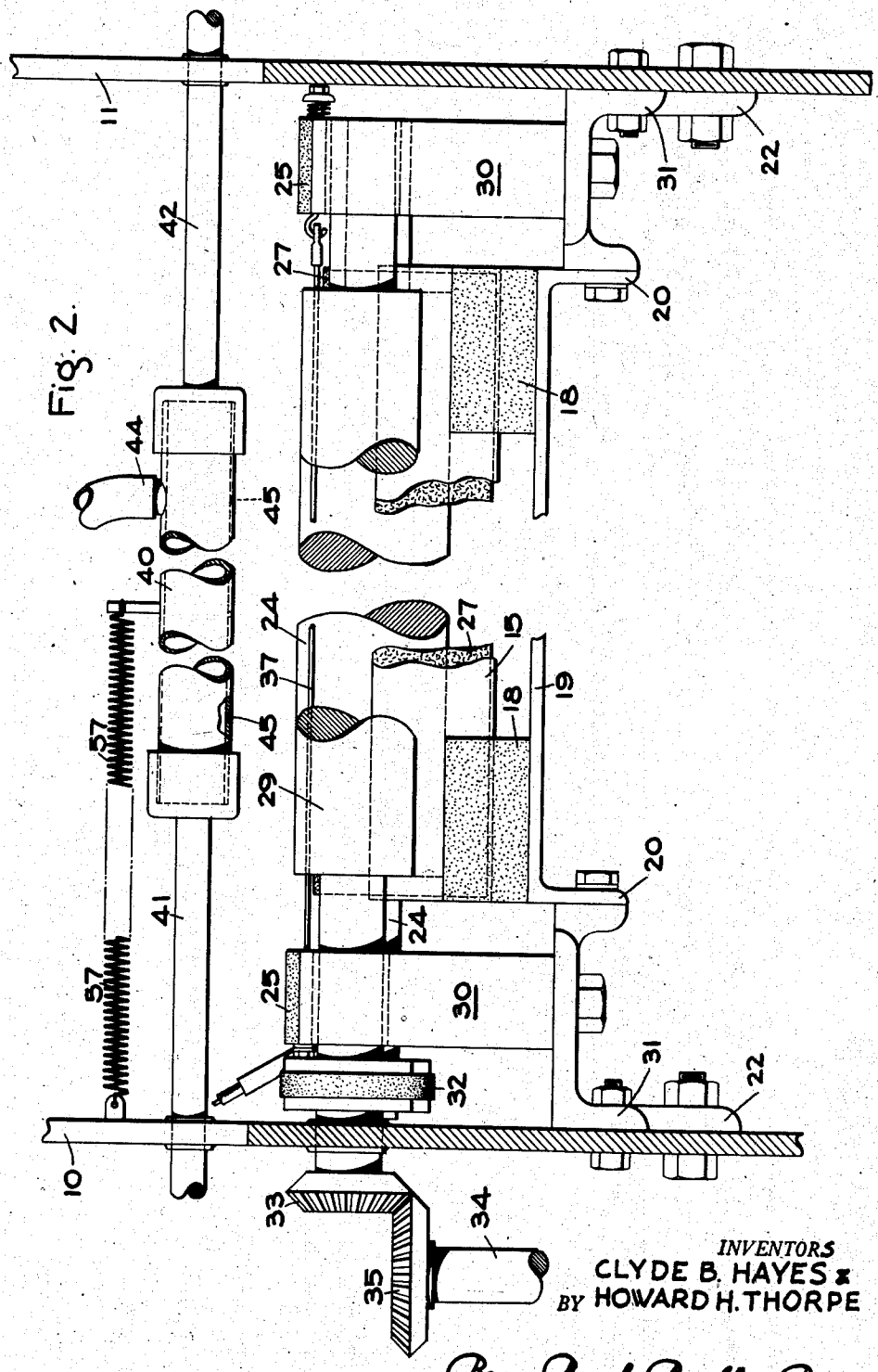

INVENTORS
CLYDE B. HAYES &
BY HOWARD H. THORPE

Beau, Brooks, Buckby & Beau

Dec. 26, 1944. C. B. HAYES ET AL 2,366,105

STOP MEANS FOR TEXTILE MACHINES

Filed Feb. 8, 1944 3 Sheets-Sheet 3

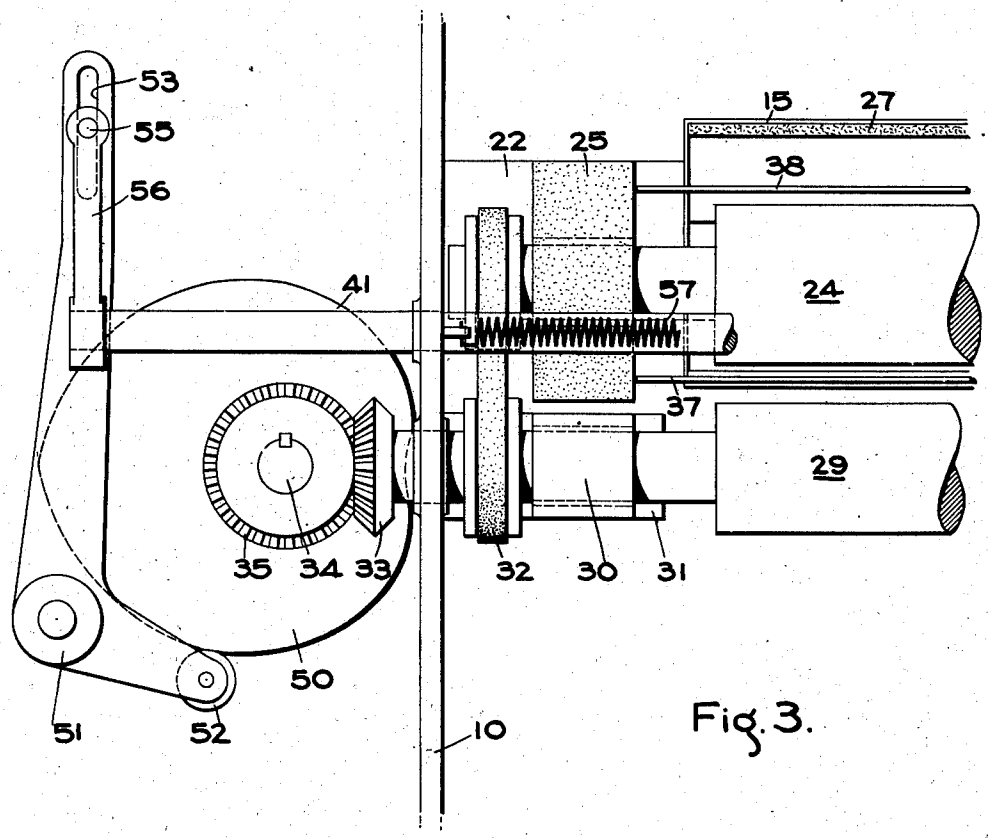

Fig. 3.

INVENTORS
CLYDE B. HAYES &
BY HOWARD H. THORPE

Beau, Brooks, Buckley & Beau.

Patented Dec. 26, 1944 2,366,105

UNITED STATES PATENT OFFICE

2,366,105

STOP MEANS FOR TEXTILE MACHINES

Clyde B. Hayes, Saratoga Springs, and Howard H. Thorpe, Tonawanda, N. Y., assignors to Van Raalte Company, Inc., New York, N. Y.

Application February 8, 1944, Serial No. 521,546

14 Claims. (Cl. 66—163)

This invention relates to textile machines and particularly to improvements in the feeding of thread or yarn therein or thereto. More particularly, the invention is directed to stop means for use in the textile arts for causing machine stoppage under abnormal conditions of thread or yarn passage.

In United States Letters Patent No. 2,330,212, dated September 28, 1943, granted to Clyde B. Hayes and Henry J. Czech, there is disclosed a novel stop means for textile machines wherein the necessity for individual drop wires or heddles for each thread is obviated by the provision of a pair of spaced electrodes which are effective to close an electrical circuit when bridged by a thread having electrically conductive properties. In the aforesaid application a pair of spaced parallel rollers are provided and the rollers, which comprise a single electrode, rotate counter to the direction of thread movement. The second electrode is disposed between the pair of spaced rollers.

In the stop means of the patent referred to in the preceding paragraph, the force of gravity alone is relied upon for causing broken or slack threads or strands to fall to the stop means for activating the same. This renders operation uncertain under some conditions. By way of example, cotton thread or yarn may be characterized by the presence of minute cotton fibres which project laterally from the main body of the thread. In certain textile machines, tricot knitting machines for instance, a number of threads or strands may extend in relatively close adjacency.

In the case of thread or yarn having the fuzzy characteristics referred to above, a thread which is not under tension, by reason of breakage or otherwise, may continue to be supported in its normal path and fed therealong by adjacent threads or strands by reason of contact between the projecting tentacles of processes of adjacent threads or strands.

The foregoing reference to cotton yarn is set forth merely by way of example and similar difficulties may be encountered in the use of other strands or threads, either natural or synthetic. Slight misalignments of warp may result in an untensed or broken thread being supported by adjacent threads even without the objectionable tentacles or fuzz found on cotton yarn.

Further, other influences may militate against the prompt dropping of abnormal threads or strands, particularly where relatively fine thread or yarn is being operated upon. Casual convection currents and the attractive or repulsive effects of extraneous static electrical charges are among the adventitious influences which may prevent or delay the prompt dropping of slack, broken or otherwise abnormal threads or strands.

While in the specific example herein described in detail reference is had to a warp stop of the conductive liquid type, in certain aspects the present invention is applicable to any textile machine stopping arrangement wherein mere displacement of a thread or strand from its normal path effects machine stoppage, without the usual and conventional interposition of heddles or drop wires. For instance, photo-sensitive means may be arranged to sense the passage of an abnormal thread or strand from or outside of the confines of normal thread or yarn travel. Here again, dependence is had on certain displacement of broken or slack threads or strands from the normal line of travel.

According to the present invention means are provided for applying a fluid pressure urge against a number of threads or strands in such a way that if any of them becomes slack or broken it will be displaced from the normal thread path in the desired direction within a short time interval. The fluid pressure urge, in a preferred embodiment of the invention, is in the form of a fine blast or series of blasts and, to bring about the desired results within practical limits, it is desirable, although not essential, to reciprocate the fluid pressure means in such a way that a single fine blast or jet may traverse or "scan" a number of parallel threads. The frequency of reciprocation may be such that each thread or strand feels the effect of the fluid pressure urge at intervals short enough to produce stoppage within a very brief period after thread or yarn failure.

By way of example the invention is shown, in the present instance, as applied to a tricot knitting machine, and again by way of example, it will be assumed that cotton thread or yarn is being knitted. It is to be understood, however, that the principles of the invention are not limited in spirit or scope to the example set forth, nor otherwise than as defined in the appended claims.

In the drawings:

Fig. 1 is a fragmentary side elevational view of a portion of a tricot knitting machine with the form of stop means of the present invention shown in cross section,

Fig. 2 is a fragmentary front elevational view of the stop means of Fig. 1; and

Fig. 3 is a fragmentary top plan view of the

mechanism for reciprocating the fluid pressure means.

Throughout the several figures of the drawings like characters of reference denote like parts. In the accompanying drawings we have illustrated only the electrodes comprising the present novel arrangement. These electrodes are preferably associated with machine controlling electrical circuits in the manner clearly shown and described in Hayes et al. Patent No. 2,330,212, wherein the circuit containing the electrodes serves as the input of an audion amplifier whose output circuit directly controls machine operation by association with conventional relay operated switches. Since every detail of the electrical portion of the device of the present invention, beginning with the electrical conductors leading from the illustrated electrodes, may be identical with the electrical means shown and completely described in the prior application, the disclosure of that part of the present device will not be repeated here.

In Figs. 1 and 2 the numerals 10 and 11 designate a pair of side frame members of a textile machine which in the illustrated instance is a tricot knitting machine. A warp beam 12 is journaled between the side frames 10 and 11 and Fig. 1 shows schematically a conventional whip roll 13 and a tension bar 14. The whip roll 13 and the tension bar 14 serve, in the illustrated instance, to cause the warp to move in a substantially horizontal direction for a portion of its travel between the warp and the knitting mechanism of the machine (not shown). It is contemplated that in conventional tricot machines employing a pair of warp beams, a separate set of electrodes will be provided for each of the warp beams.

In Fig. 1 the warp is shown coming off of the bottom of the beam 12 but this will be varied to suit the circumstances of particular machines and the warp beam supports will be so arranged that thread angles about the whip roll are not too acute for practical operation. In tricot machines employing two warp beams, one may feed warp from the bottom and the other from the top of the beam. In Fig. 1 the dot and dash showing A indicates the most acute thread angle, when the warp beam 12 is practically depleted, while the dot and dash showing B shows the thread path when the warp beam is full.

In the drawings the numeral 15 designates an elongate pan which extends from one side of the machine to the other beneath the entire warp, which is designated 16 in Fig. 1. The pan 15 may be attached to the machine in any convenient manner. In its illustrated form the pan 15, which is of arcuate transverse cross section, rests in a pair of insulating blocks 18 which in turn are secured to a base plate 19 whose opposite ends may be downwardly flanged as at 20, for securement to inverted U-shaped brackets 22 carried by the side frames 10 and 11.

It may be reiterated here that any form of electrosensitive warp stop means may be used in combination with the present thread or yarn diverting means without departing from the basic teachings of the present invention. A specific preferred form of the stop means per se is, however, set forth here by way of example.

A fountain roller 24 is supported with its axis lengthwise of pan 15 by means of bearing blocks 25 of insulating material, the roller 24 being so disposed that its lower portion is immersed in an electrically conductive liquid 26 contained in pan 15. A wick 27 extends lengthwise of pan 15 as shown and is folded in such a way that it insures an even coating of liquid on the surface of the roller 24 at the point where it leaves the liquid. In Fig. 1 the numeral 28 designates a pair of electrical conductors which extend along and grip a marginal edge of wick 27. The roller 24 is continuously rotated in a counter-clockwise direction as viewed in Fig. 1.

A second roller 29 is disposed parallel to roller 24 and is supported for rotation by bearing blocks 30 which are supported by brackets 31 secured to the frame members 10 and 11. In the illustrated instance it is desired to rotate both of the rollers 24 and 29 in a counter-clockwise direction as viewed in Fig. 1 and to this end they are belt-connected as at 32. Either of the rollers 24 or 29 may have driving connection with any convenient rotating part of the machine with which the apparatus is associated. In the case of a tricot knitting machine, for instance, one of the rollers 24 and 29 may be gear or pulley-connected with the pattern wheel shaft of the knitting machine. In the drawings such gearing is partially illustrated, the roller 29 having a bevel gear 33 and a stub shaft 34 having a meshing bevel gear 35.

Referring particularly to Fig. 1, a pair of electrode wires 37 and 38 extend between and are supported by the insulating bearing blocks 25. One of the electrode wires is disposed at either side of roller 24 and in the form illustrated they are disposed just slightly below the top surface of roller 24. The electrode wires 37 and 38 and the roller 29 have a common electrical connector whereby they form one electrode of a primary machine stopping circuit similar to that set forth in Hayes et al. Patent No. 2,330,212. The pan 15, the wick 27 and the roller 24 have a common electrical conductor leading therefrom and form an opposite spaced electrode of the primary machine stopping circuit.

In a preferred form the roller 29 is provided with a relatively rough surface as by sand-blasting and the roller 24 has a less rough surface produced by finer sand-blasting. When a thread or strand falls into contact with either of the rollers it is moved forwardly by rotation of the rollers and is made wet with conductive liquid by contact with the roller 24. As the portion of the thread or strand which is made wet by contact with roller 24 moves away from roller 24 it normally comes to electrode wire 37 to complete a machine stopping circuit. If for any reason it does not fall to electrode wire 37 but is drawn forwardly by and to roller 29, the machine stopping circuit is alternatively closed. If for any reason the wet portion of the broken or slack thread or strand extends rearwardly from roller 24 it will close a cicuit to the electrode wire 38.

According to the present invention pneumatic thread displacing means are provided for urging broken or slack threads or strands toward the stop means comprising the rollers and the electrode wires. The pneumatic means is preferably disposed at the opposite side of the threads from the stop means, in the illustrated instance above the warp path, and may comprise a tube 40 extending across the entire warp, as in Fig. 2. The tube 40 is supported at its ends by shafts 41 and 42 which have axially sliding bearing in the frame members 10 and 11 and the interior of tube 40 is connected with a source of air under pressure by a conduit 44. The side of the tube 40 facing the warp, in the illustration the

bottom thereof, is provided with a series of openings 45 which form fluid pressure jets serving to blow threads against which they impinge to the stop means.

In the interests of economy of air displacement and to insure a sufficient thread-propulsive force within practical limits, the tube 40 is continuously reciprocated axially, whereby each jet 45 acts serially against a number of warp threads. For example openings 45 may be spaced at a pitch of 4" along tube 40 and the tube may be given a reciprocating movement having an amplitude of 4¼", to insure action of the jet means against all of the threads at one time or another during each stroke of reciprocation of tube 40.

It is desired to reciprocate tube 40 at a uniform rate and to this end a uniform motion cam 50 may be fixed to stub shaft 34, as shown in Fig. 3. A rocker arm 51, medially pivotally supported in any desired manner, has a cam follower 52 at one end and a slot 53 at its other end. Slot 53 receives a pin 55 carried by an arm 56 fixed to the shaft 41. An extension coil spring 57 biases the tube 40 to the left as viewed in Figs. 2 and 3 so that rotation of cam 50 continuously and uniformly reciprocates the tube 40 over the warp.

The foregoing structure is found to effectively insure the displacement of broken or slack threads to a point where they activate the stop means.

What is claimed is:

1. In a textile machine having knitting mechanism, a warp beam for supplying yarn thereto, and means for constraining normal threads to a predetermined normal path between said warp beam and said knitting mechanism; stop means adjacent said normal thread path and sensitive to displacement of a thread from said predetermined normal path, and means for directing a current of air against said threads of sufficient intensity to displace broken or slack threads from said normal path to actuate said stop means.

2. In a textile machine having knitting mechanism, a warp beam for supplying yarn thereto, and means for constraining normal threads to a predetermined normal path between said warp beam and said knitting mechanism; stop means adjacent said normal thread path and sensitive to displacement of a thread from said predetermined normal path, means for directing a current of air against said threads to displace broken or slack threads from said normal path to actuate said stop means, and means for reciprocating said air directing means transversely of the thread path to successively impinge air against a number of transversely-occurring threads.

3. In a textile machine having knitting mechanism, a warp beam for supplying yarn thereto, and means for constraining normal threads to a predetermined normal path between said warp beam and said knitting mechanism; a machine-stopping circuit having spaced electrodes adjacent said normal thread path, said circuit being closable by displacement of a thread from said predetermined normal path to said electrodes, and means for directing a current of air against said threads of sufficient intensity to displace broken or slack threads from said normal path to actuate said stop means.

4. In a textile machine having knitting mechanism, a warp beam for supplying yarn thereto, and means for constraining normal threads to a predetermined normal path between said warp beam and said knitting mechanism; a machine-stopping circuit having spaced electrodes adjacent said normal thread path, said circuit being closable by displacement of a thread from said predetermined normal path to said electrodes, means for directing a current of air against said threads to displace broken or slack threads from said normal path to said electrodes, and means for reciprocating said air-directing means transversely of the thread path to successively impinge air against a number of transversely-occurring threads.

5. In a textile machine having knitting mechanism, a warp beam for supplying yarn thereto, and means for constraining normal threads to a predetermined normal path between said warp beam and said knitting mechanism; stop means adjacent said normal thread path and sensitive to displacement of a thread from said predetermined normal path, means for directing a fluid current toward said threads to urge broken or slack threads from said normal path to actuate said stop means, and means for moving said fluid current means across the thread path to direct fluid against a plurality of transversely spaced threads.

6. In a textile machine having knitting mechanism, a warp beam for supplying yarn thereto, and means for constraining normal threads to a predetermined normal path between said warp beam and said knitting mechanism; stop means adjacent said normal thread path and sensitive to displacement of a thread from said predetermined normal path, means for directing a current of air against said threads to urge broken or slack threads from said normal path to actuate said stop means, said means comprising an elongate fluid casing extending transversely of said normal thread path and having a series of openings therealong directed toward the thread path, and means for reciprocating said fluid casing whereby air issuing from said openings successively impinges against adjacent threads whereby all of the threads are acted upon by said air directing means.

7. In a textile machine having thread-feeding means and means for constraining normal threads to a predetermined normal path, stop means adjacent said normal thread path and sensitive to displacement of a thread from said predetermined normal path, and means for directing a current of air against said threads of sufficient intensity to displace broken or slack threads from said normal path to actuate said stop means.

8. In a textile machine having thread-feeding means and means for constraining normal threads to a predetermined normal path, stop means adjacent said normal thread path and sensitive to displacement of a thread from said predetermined normal path, means for directing a current of air against said threads to displace broken or slack threads from said normal path to actuate said stop means, and means for reciprocating said air directing means transversely of the thread path to successively impinge air against a number of transversely-occurring threads.

9. In a textile machine having thread-feeding means and means for constraining normal threads to a predetermined normal path, a machine-stopping circuit having spaced electrodes adjacent said normal thread path, said circuit being closable by displacement of a thread from said predetermined normal path to said electrodes, and

means for directing a current of air against said threads of sufficient intensity to displace broken or slack threads from said normal path to actuate said stop means.

10. In a textile machine having thread-feeding means and means for constraining normal threads to a predetermined normal path, a machine-stopping circuit having spaced electrodes adjacent said normal thread path, said circuit being closable by displacement of a thread from said predetermined normal path to said electrodes, means for directing a current of air against said threads to displace broken or slack threads from said normal path to said electrodes, and means for reciprocating said air directing means transversely of the thread path to successively impinge air against a number of transversely-occurring threads.

11. In a textile machine having thread-feeding means and means for constraining normal threads to a predetermined normal path, stop means adjacent said normal thread path and sensitive to displacement of a thread from said predetermined normal path, means for directing a fluid current toward said threads to urge broken or slack threads from said normal path to actuate said stop means, and means for moving said fluid current means across the thread path to direct fluid against a plurality of transversely spaced threads.

12. In a textile machine having thread-feeding means and means for constraining normal threads to a predetermined normal path, stop means adjacent said normal thread path and sensitive to displacement of a thread from said predetermined normal path, means for directing a current of air against said threads to urge broken or slack threads from said normal path to actuate said stop means, said means comprising an elongate fluid casing extending transversely of said normal thread path and having a series of openings therealong directed toward the thread path, and means for reciprocating said fluid casing whereby air issuing from said openings successively impinges against adjacent threads whereby all of the threads are acted upon by said air directing means.

13. In a textile machine having knitting mechanism, a warp beam for supplying yarn thereto, and means for constraining normal threads to a predetermined normal path between said warp beam and said knitting mechanism; stop means adjacent said normal thread path and sensitive to displacement of a thread from said predetermined normal path, and means for directing a fluid current toward said threads to urge broken or slack threads from said normal path to actuate said stop means.

14. In a textile machine having thread-feeding means and means for constraining normal threads to a predetermined normal path, stop means adjacent said normal thread path and sensitive to displacement of a thread from said predetermined normal path, and means for directing a fluid current toward said threads to urge broken or slack threads from said normal path to actuate said stop means.

CLYDE B. HAYES.
HOWARD H. THORPE.