Dec. 3, 1929. W. L. GRATHWOL 1,738,065

VACUUM CLEANER FOR AUTOMOBILES

Filed Feb. 12, 1926

Fig. 1

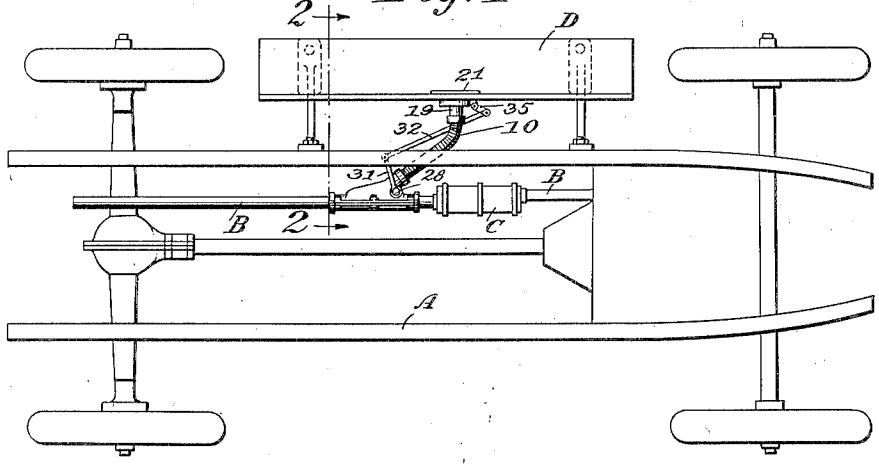

Fig. 2

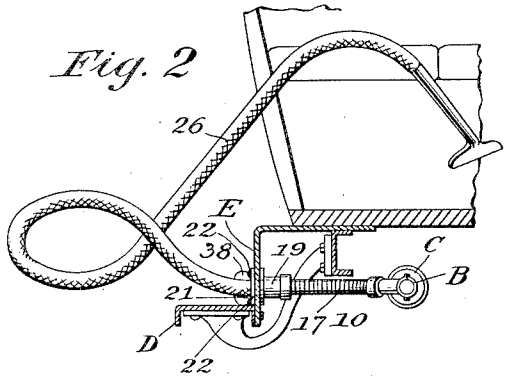

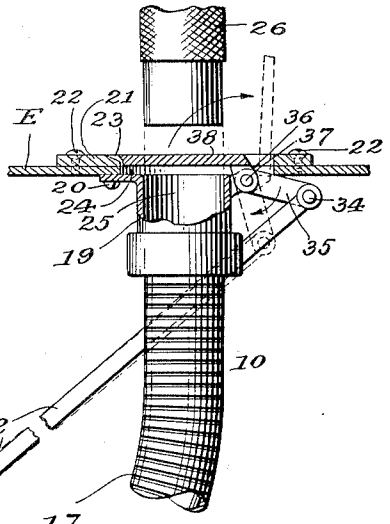

Fig. 4

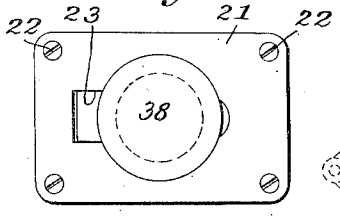

Fig. 3

Fig. 5

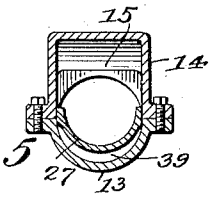

INVENTOR.
William L. Grathwol
BY G. H. Braddock
ATTORNEY

Patented Dec. 3, 1929 1,738,065

UNITED STATES PATENT OFFICE

WILLIAM L. GRATHWOL, OF STRATFORD, CONNECTICUT

VACUUM CLEANER FOR AUTOMOBILES

Application filed February 12, 1926. Serial No. 87,938.

This invention relates to a vacuum cleaner for automobiles adapted to be operated by utilization of the engine exhaust, and the broad object of the invention is to produce a vacuum cleaner which will be an improvement generally over the disclosure of patent to Leathers, No. 1,499,937, granted July 1, 1924.

A more specific object is to provide a vacuum cleaner of the present character which is adapted to be directly connected with the main exhaust line of an engine, and which is provided with mechanism whereby a vacuum may be easily and readily produced in a pipe connection or conduit, or may be just as easily and readily destroyed.

A further specific object is to provide novel, simple, and improved vacuum producing mechanism adapted to be automatically manipulated to destroy vacuum in said pipe connection or conduit when the cleaner is out of use.

With the above objects in view, as well as others which will appear as the specification proceeds, the invention comprises the construction, arrangement and combination of parts as now to be fully described and as hereinafter to be specifically claimed, it being understood that the disclosure herein is merely illustrative and meant in no way in a limiting sense, changes in details of construction and arrangement of parts being permissible so long as within the spirit of the invention and the scope of the appended claims.

In the accompanying drawing forming a part of this specification,

Fig. 1 is a plan view of an automotive vehicle chassis, disclosing one of the running boards and the exhaust line with muffler, and showing the improved cleaner associated with said running board and exhaust line;

Fig. 2 is a detail sectional view, the line 2—2 in Fig. 1 suggesting the location of the section, disclosing a vacuum cleaner hose associated with the conduit of the cleaner;

Fig. 3 is an enlarged elevational view, partially in section, disclosing an exhaust line, the fitting and conduit or pipe connection of the cleaner, the automotive vehicle running board, and parts associated with the parts mentioned, the exhaust gas accelerator being shown in full and in dotted lines;

Fig. 4 is an elevational view of the running board plate and the vacuum controlling flap, disclosing the flap in the inoperative position of the cleaner; and

Fig. 55 is a sectional view on line 5—5 in Fig. 3, showing the exhaust gas accelerator in the operative position of the cleaner.

With respect to the drawing and the characters and numerals of reference thereon, A denotes an automotive vehicle chassis, B the exhaust line of the engine of said vehicle, C a muffler in said exhaust line, D a running board on said chassis, and 10 represents, generally, the vacuum cleaner of the invention, which is, as disclosed, associated with the exhaust line and running board.

Of the vacuum cleaner, 11 is a fitting secured in the exhaust line. Clearly, the fitting could be secured at the end of the exhaust line. As shown, the fitting consists of two tightly fitted pieces surrounding the exhaust line and clamped thereon as at 12. One of the pieces 13 of the fitting is a longitudinal part of a tube, while the other piece 14 consists of a longitudinal part of a tube having a pocket, cavity, or depression 15 which is in communication with a hollow pipe 16 adapted to receive a conduit or pipe connection 17, the conduit or pipe connection being secured to the hollow pipe in any convenient or suitable manner, as indicated at 18.

The end 19 of the conduit or pipe connection 17 spaced from the fitting 11 is, for convenience, preferably secured, as at 20, to the inner face of a vertical part E of the running board D, although said end 19 could be otherwise situated.

Numeral 21 indicates a plate secured as at 22 upon the outer face of said vertical part E of the running board, said plate 21 having an opening 23 coinciding with an opening 24 through said vertical part, which opening 24 aligns with the open end 25 of the conduit 17. 26 is a vacuum cleaner hose adapted to be passed through the openings 23 and 24 and fitted in any preferred manner into said open end 25.

The hollow pipe 16 is adapted to be nor-

mally covered (when the vacuum cleaner is out of use), to shut off communication between the exhaust line and the conduit 17, as by an exhaust gas accelerator 27 fixed upon a shaft 28 rotatably supported in the fitting 11, said accelerator being disclosed in Fig. 3 as cutting off communication between the pipe 16 and the exhaust line.

The exhaust gas accelerator is adapted to be normally situated (as in full lines in Fig. 3) so that the normal passage 29 through the fitting is at least as large in diameter as is the passage 30 through the exhaust line next adjacent the fitting (to the right in Fig. 3), and said accelerator is adapted to be swung to its dotted line position of Fig. 3 (its full line position of Fig. 5) in order that the cleaner may operate. For so swinging said accelerator I provide a lever 31 fixed upon said shaft 28, and a link 32 having one of its ends pivoted, as at 33, to said lever 31 and its other end pivoted, as at 34 to an arm 35 of a lever 36 itself pivoted as at 37 upon the outer end of conduit 17, the lever 36 including a flap 38 adapted to normally cover (when the cleaner is out of use) the openings 23 and 24, and hence cover the open end 25 of the conduit 17. See Figs. 1 to 4.

The manner in which the vacuum cleaner functions is obvious. When the parts are as shown in full lines in Fig. 3, the exhaust outlet is of the same cross-sectional area as is the outlet through the fitting 11, and incidentally, the conduit 17 is out of communication with the exhaust line and the flap 38 is closed. When the parts are as shown in dotted lines in Fig. 3, or in full lines in Fig. 5, there is communication between the conduit 17 and the exhaust line, and the outer, open end 25 of the conduit is uncovered to receive the cleaner hose. See Fig. 2. At the same time, the exhaust gas outlet through the fitting and past the accelerator 27 is restricted, as indicated at 39. When the passage past the accelerator is not restricted there is no suction created in the exhaust line, and incidentally, even if there were, this could not be communicated to the conduit 17 for the reason that the accelerator closes said conduit. But when the passage through the fitting is restricted, there is a corresponding acceleration in the velocity of exhaust gases passing through said fitting adapted to create a suction, and, the conduit 17 now being open to the exhaust line, said suction will tend to create a vacuum in said conduit which will be satisfied through the cleaner hose.

As will be seen, the exhaust gas accelerator when in the operative position of the cleaner functions after the fashion of a venturi to increase the velocity of the gases passing from the exhaust gas manifold. Any equivalent mechanism can be substituted for the accelerator disclosed, the idea being to provide a suction in the conduit 17 when this is desired, or to destroy the suction when the vacuum cleaner is out of use. Clearly, when the accelerator is positioned as in full lines in Fig. 3, there is no vacuum in the exhaust line or fitting 11 adjacent the hollow pipe 16, but the moment the accelerator is swung to the operative position of the cleaner, the velocity of exhaust gases rushing through the restricted opening through the fitting is greatly increased, to produce vacuum in and about the pocket, cavity, or depression 15, which vacuum must be satisfied via the conduit 17 and the cleaner hose, as will be evident.

When the flap 38 is thrown to open position and the hose 26 is inserted, the flap cannot return to the inoperative position of the cleaner (to cover the conduit 17), but the moment the hose is removed, there will be a return of the flap to its normal location accomplished by the suction through the conduit 17 acting directly upon the flap and by pressure in the exhaust line acting against the accelerator 27. Or if preferred, a spring (not shown) may be applied to the flap 38 to return it to normal position when the cleaner hose is withdrawn, to preclude operation of the device when use is not intended.

What I claim is:

1. In an automotive vehicle, a passage for exhaust gases, a conduit adapted to communicate with said passage, manually movable means for restricting the area of said passage adjacent the mouth of said conduit, and means for closing communication between said conduit and passage.

2. In an automotive vehicle, a normally unobstructed passage for all of the exhaust gases from the cylinders of the engine of said vehicle, a conduit normally out of connection with the passage and adapted to communicate therewith, and means adapted to be removably associated with said passage to afford communication between said conduit and passage, said means normally being situated without said passage.

3. In an automotive vehicle, a normally unobstructed passage for exhaust gases, a conduit adapted to communicate with said passage, and means capable of association with said passage to afford communication between said conduit and passage, said means normally being situated outside of said passage.

4. In an automotive vehicle, in combination with a normally unobstructed passage for all of the exhaust gases from the cylinders of the engine of said vehicle, a conduit adapted to communicate with said passage, and means adapted to be removably associated with said passage to afford communication between said conduit and passage, said means normally being situated without said passage.

5. In an automotive vehicle, a passage for exhaust gases, a conduit, and means for restricting the cross-sectional area of said passage and for simultaneously opening commu-

nication between said conduit and passage, whereby exhaust gases traveling through said passage will tend to create a vacuum in said conduit.

6. In an automotive vehicle, a passage for exhaust gases, a conduit, and means for restricting the cross-sectional area of said passage and for simultaneously opening communication between said conduit and a portion of said passage adapted to receive exhaust gases after they have passed the restricted area of said passage, whereby to increase the velocity of exhaust gases traveling through said passage at the mouth of said conduit to thus tend to create a vacuum in said conduit.

7. In an automotive vehicle, a passage for exhaust gases, a conduit, and means in said passage adjacent the mouth of said conduit for restricting the cross-sectional area of said passage and for simultaneously opening communication between said conduit and passage at a location adjacent said restricted area and to which said exhaust gases are adapted to travel when past said restricted area.

8. In an automotive vehicle, a passage for exhaust gases, a conduit, an exhaust gas accelerator in said passage adjacent the mouth of said conduit, and means for manipulating said accelerator to restrict said passage and to simultaneously open communication between said conduit and passage.

9. In an automotive vehicle, a passage for exhaust gases, a conduit, an exhaust gas accelerator in said passage adjacent the mouth of said conduit, said accelerator being adapted to normally close said conduit from said passage, and means for manipulating said accelerator to restrict said passage and to open said conduit to said passage.

10. In an automotive vehicle, a passage for exhaust gases, a conduit, an exhaust gas accelerator in said passage adjacent the mouth of said conduit, said accelerator being adapted to normally close said conduit from said passage, and means for manipulating said accelerator to restrict said passage and to open said conduit to said passage at a location adjacent said restricted area of said passage and adapted to receive exhaust gases from said restricted area, whereby to accelerate the velocity of exhaust gases moving through said passage adjacent the mouth of said conduit to thus tend to produce a vacuum in said conduit.

11. In an automotive vehicle, an exhaust outlet including a passage for exhaust gases and a pocket in said passage, a conduit adapted to communicate with said passage, and means in said pocket normally closing said conduit from said passage, said means being adapted to be manipulated to afford communication between said conduit and passage and to simultaneously restrict said passage adjacent said pocket and the location of communication between said conduit and passage.

12. In an automotive vehicle, an exhaust outlet including a passage for exhaust gases and a pocket in said passage, a conduit adapted to communicate with said passage, an exhaust gas accelerator in said pocket, and means for manipulating said accelerator to afford free communication between the conduit and passage and to simultaneously restrict said passage and thus increase the velocity of exhaust gases adapted to travel past the mouth of said conduit.

13. In an automotive vehicle, an exhaust outlet, a conduit adapted to communicate therewith, and means between said conduit and exhaust outlet adapted to normally restrict said conduit, said means being adapted to be manipulated to allow communication between said conduit and exhaust outlet and to simultaneously restrict the area of said exhaust outlet at a location adjacent the location of communication between said conduit and outlet.

14. In an automotive vehicle, an exhaust outlet, a conduit adapted to communicate therewith, an exhaust gas accelerator between said conduit and exhaust outlet adapted to normally restrict said conduit, and means for manipulating said accelerator to afford communication between said conduit and exhaust outlet and to simultaneously restrict the area of said exhaust outlet at a location adjacent the location of communication between said conduit and outlet.

15. A device of the character described, comprising a fitting adapted to be secured to the exhaust line of an automotive vehicle engine, a conduit adapted to communicate with said fitting, an exhaust gas accelerator adapted to normally restrict communication between said conduit and fitting, and means for causing said accelerator to restrict said fitting and to simultaneously afford communication between said conduit and fitting.

16. A device of the character described, comprising a fitting having a passage for exhaust gases, a conduit adapted to communicate with said passage, an exhaust gas accelerator adapted to normally restrict communication between said conduit and passage, and means for adjusting said accelerator to afford communication between said conduit and passage and to simultaneously restrict the cross-sectional area of said passage.

17. A device of the character described, comprising a passage including an exhaust gas outlet, a conduit adapted to communicate with said passage, means whereby the travel of exhaust gases through said passage toward said outlet can create vacuum in said conduit, and other means for adjusting said means to position without said passage to remove said conduit from the effect of the travel of exhaust gases through said passage.

18. A device of the character described, comprising a passage including an exhaust gas outlet, a conduit adapted to communicate with said passage, means whereby the travel of exhaust gases through said passage can create vacuum in said conduit, and other means for adjusting said means to remove said conduit from the effect of the travel of exhaust gases through said passage.

19. In an automotive vehicle, a passage including an exhaust gas outlet, a conduit adapted to communicate with said passage, and means removably associated with said passage whereby the travel of exhaust gases through said passage can create vacuum in said conduit, said means normally being situated without said passage.

20. A device of the character described, comprising a member having a passage for exhaust gases, a conduit adapted to communicate with said member, and means adapted to be inserted in said passage, to afford communication between the conduit and passage tending to create a vacuum in said conduit by reason of the travel of exhaust gases through said passage, said means normally being situated without said passage to rid said conduit of vacuum.

21. In an automotive vehicle, an exhaust gas outlet, a fitting associated with said outlet and having a passage for exhaust gases, a conduit adapted to communicate with said passage, a pivoted and adjustable accelerator between said conduit and passage adapted to be positioned to restrict communication between the conduit and passage, or to open communication between the conduit and passage and restrict the passage, and means for manipulating said accelerator, said means comprising a lever fixed to the axis of said accelerator, a link pivoted to said mentioned lever, and a second lever pivoted upon a fixed part of the vehicle and to which the link is pivoted.

22. In an automotive vehicle, an exhaust gas outlet, a fitting associated with said outlet and having a passage for exhaust gases, a conduit adapted to communicate with said passage, the conduit being secured upon a fixed part of the vehicle and having an opening adapted to receive a vacuum hose, a pivoted and adjustable accelerator between said conduit and passage adapted to be positioned to restrict communication between the conduit and passage, or to open communication between the conduit and passage and restrict the passage, and means for manipulating said accelerator, said means comprising a lever fixed to the axis of said accelerator, a link pivoted to said mentioned lever, and a second lever pivoted upon a fixed part of the vehicle and to which the link is pivoted, said second lever including a flap adapted to cover said conduit opening when said accelerator is in position to restrict communication between said conduit and passage.

23. The combination as specified in claim 22, wherein said accelerator is adapted to automatically position itself to restrict communication between said conduit and passage when said vacuum hose is removed from said conduit.

24. In an automotive vehicle, an exhaust gas passage, a conduit adapted to communicate with said passage, the conduit having an opening adapted to receive a vacuum hose, an accelerator between said conduit and passage adapted to be positioned to restrict communication between the conduit and passage, or to open communication between the conduit and passage and restrict the passage, and means for manipulating the accelerator, said accelerator being adapted to allow communication between the conduit and passage and restrict the passage when said vacuum hose is in said conduit, and said accelerator manipulating means being adapted to automatically return said accelerator to its position restricting communication between the conduit and passage when said hose is removed from said conduit.

Signed at Bridgeport, in the county of Fairfield and State of Connecticut, this 1st day of February, A. D. 1926.

WILLIAM L. GRATHWOL.