(12) INTERNATIONAL APPLICATION PUBLISHED UNDER THE PATENT COOPERATION TREATY (PCT)

(19) World Intellectual Property Organization
International Bureau

(43) International Publication Date
17 September 2015 (17.09.2015)

WIPO | PCT

(10) International Publication Number
WO 2015/136423 A1

(51) International Patent Classification:
A61M 25/00 (2006.01) *A61M 39/22* (2006.01)
A61M 25/06 (2006.01) *A61M 39/28* (2006.01)
A61M 39/06 (2006.01)

(21) International Application Number:
PCT/IB2015/051666

(22) International Filing Date:
6 March 2015 (06.03.2015)

(25) Filing Language: Italian

(26) Publication Language: English

(30) Priority Data:
MO2014A000059 10 March 2014 (10.03.2014) IT

(71) Applicant: **DELTA MED S.P.A. UNIPERSONALE** [IT/IT]; Via Guido Rossa, 20, I-46019 Viadana (mn) (IT).

(72) Inventors: **BERTOLI, Alessandro**; Via G. Marconi, 9, I-26037 San Giovanni In Croce (cr) (IT). **BALBONI, Alessandro**; Via Cesare Pavese, 3, I-46030 San Giorgio Di Mantova (mn) (IT).

(74) Agent: **BERGAMINI, Silvio**; Maroscia & Associati S.r.l., Contrà Porti, 21, I-36100 Vicenza (IT).

(81) Designated States *(unless otherwise indicated, for every kind of national protection available)*: AE, AG, AL, AM, AO, AT, AU, AZ, BA, BB, BG, BH, BN, BR, BW, BY, BZ, CA, CH, CL, CN, CO, CR, CU, CZ, DE, DK, DM, DO, DZ, EC, EE, EG, ES, FI, GB, GD, GE, GH, GM, GT, HN, HR, HU, ID, IL, IN, IR, IS, JP, KE, KG, KN, KP, KR, KZ, LA, LC, LK, LR, LS, LU, LY, MA, MD, ME, MG, MK, MN, MW, MX, MY, MZ, NA, NG, NI, NO, NZ, OM, PA, PE, PG, PH, PL, PT, QA, RO, RS, RU, RW, SA, SC, SD, SE, SG, SK, SL, SM, ST, SV, SY, TH, TJ, TM, TN, TR, TT, TZ, UA, UG, US, UZ, VC, VN, ZA, ZM, ZW.

(84) Designated States *(unless otherwise indicated, for every kind of regional protection available)*: ARIPO (BW, GH, GM, KE, LR, LS, MW, MZ, NA, RW, SD, SL, ST, SZ, TZ, UG, ZM, ZW), Eurasian (AM, AZ, BY, KG, KZ, RU, TJ, TM), European (AL, AT, BE, BG, CH, CY, CZ, DE, DK, EE, ES, FI, FR, GB, GR, HR, HU, IE, IS, IT, LT, LU, LV, MC, MK, MT, NL, NO, PL, PT, RO, RS, SE, SI, SK, SM, TR), OAPI (BF, BJ, CF, CG, CI, CM, GA, GN, GQ, GW, KM, ML, MR, NE, SN, TD, TG).

Published:

— *with international search report (Art. 21(3))*

(54) **Title**: AN ANTI-REFLUX CATHETER

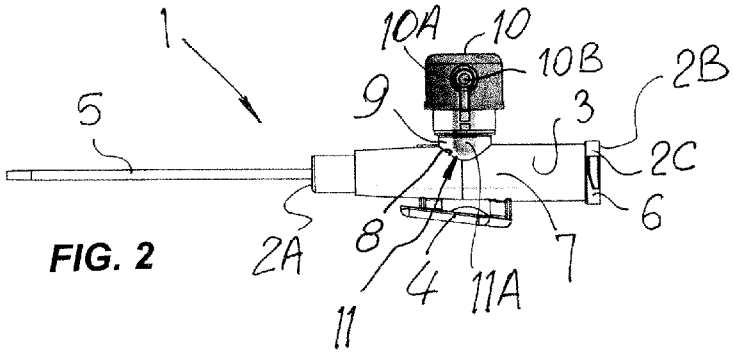

FIG. 2

(57) **Abstract**: The anti-reflux catheter comprises: a central support body (2) having an inner longitudinal passage chamber (3); a cannula (5) extending out of one end (2A) of the central body (2) and connected to the inner chamber (3); a transverse opening (8) which extends through the central body (2) and communicates with the inner chamber (3); an outwardly extending mouthpiece (9) of the transverse opening (8); a flexible sleeve (7) longitudinally accommodated in the inner chamber (3) at the transverse opening (8) and having an outer surface facing such transverse opening (8); said mouthpiece (9) having pressure means (10, 1 1) associated therewith, which act upon said sleeve (7) and are movable between an idle position or an operating pressed position, and vice versa.

WO 2015/136423 A1

AN ANTI-REFLUX CATHETER

Field of the invention

The invention relates to an anti-reflux catheter, which is generally designed to be introduced into a blood vessel of a patient using a coaxially-received introducer needle, and can block outward blood refluxes when the introducer needle is removed from the catheter.

Background art

Flexible catheters are known to be designed to be introduced into a blood vessel of a patient using an introducer needle, which is coaxially introduced into the lumen of the catheter before injection, to impart such a relative temporary axial stiffness thereto, as to allow it to penetrate the blood vessel without bending.

Typically, a catheter adapted to be introduced into a blood vessel comprises a flexible tubular body which has, at one end designed as a proximal end, i.e. facing an operator during use, a support element, known and referenced hereibelow as "hub", which has an inner axial passage cavity, seamlessly connected to the tubular body and, in certain embodiments, also a pair of wings bilaterally extending from the hub.

The latter defines an end facing away from that with the tubular body attached thereto, which forms an opening having a peripheral standard connection profile for tubing or other medical equipment.

Typically, the hub also has a so-called transverse "injection point" thereon, consisting of a small cylindrical dimple that laterally projects from the hub and has an axial channel communicating with the axial inner cavity of the hub.

The cylindrical dimple is typically sealed at its base with an elastically flexible cylinder which is coaxially, stably forced into the axial inner cavity of the hub, and can maintain the seal when it is not subjected to transverse stresses due to the pressure of a liquid which is introduced through the cylindrical dimple, for instance by means of a syringe, and has to be added to the normal flow of medicament that flows in the axial inner cavity of the hub;

in this condition, the cylinder partially bends and opens the connection between the axial channel of the dimple and the axial inner cavity of the hub.

In other words, this injection point allows the patients to be administered additional medicaments, when needed, to be mixed with the drugs that normally flow along the tubular body of the catheter, during infusion, into the blood vessel of the patient.

The introducer needle consists of a thin, axially hollow metal shaft having a tip at one end and, at the opposite end, a support element having a finger grip portion for the operators and a connector, also of standard type, for additional tubing or equipment, which is protected by a screw cap when not in use.

The needle shaft is slightly longer than the tubular body of the catheter such that, when it is entirely inserted therein in a ready-for-injection configuration, the tip and a very short distal section of the shaft project out of the corresponding end of the tubular body, to prick and open a passage for the tubular wall in the blood vessel wall.

Once the injection has been made and the catheter has been placed in the right position, the operator fixes the hub to the epidermis of the patient, typically by means of an adhesive strap and holds the hub with one hand while removing the introducer needle from the catheter with the other hand, to release the tubular body in which the medicinal solutions to be infused to the patient are designed to flow.

This prior art has the drawback that, as soon as the operator has completed the removal of the introducer needle shaft from the tubular body of the catheter, blood refluxes outwards therethrough from the blood vessel of the patient, due to the blood pressure therein.

In order to obviate this drawback and stop blood flowing out of the proximal end of the catheter, the operators can only press the blood vessels with their fingers immediately upstream from the end of the tubular body, until the proximal end of the hub is connected to the connector of an infusion tube.

This step requires a quick action by the operators, which are often

incomplete or imperfect, because the tubular body is often pressed, thereby causing some blood outflow, and creating serious hazards of infection transmission by contact for operators, as well as contamination of the surrounding environment, as well as possible panic and anxiety in patients, as they see their own blood.

Furthermore, the required strong pressure on the blood vessel or, mistakingly, on the tubular body of the catheter, may cause pain in the patient due to crushing of an area of the body that has already been pricked for introducing the catheter in the blood vessel, and may be affected by an inherently painful disease.

It shall be noted that the above mentioned problems reiterate each time that different drugs have to be administered to a patient.

Therefore, alternation of different administrations requires the drug infusion flows that have been administered before through respective lines to be stopped, the lines to be removed, and a second line to be attached for administration of a second drug.

These disconnection and reconnection steps must be carried out while pressing the blood vessel of the patient to avoid outward blood refluxes.

Disclosure of the invention

One object of the invention is to improve the prior art.

Another object of the invention is to provide an anti-reflux catheter that affords easy blocking of outward blood reflux from a blood vessel once the introducer needle has been removed from the tubular body.

A further object of the invention is to provide an anti-reflux catheter that allows health operators to use it with no hazard of infection transmissions by accidental contact with patient blood outflowing from catheters, and to avoid the other above mentioned problems.

Yet another object of the invention is to provide an anti-reflux catheter that can be quickly and simply operated, without causing additional pain to patients.

In one aspect, the invention provides an anti-reflux catheter as defined

by the features of claim 1.

The invention achieves the following advantages:

- blocking blood reflux from a blood vessel of a patient once the catheter has been introduced and the introducer needle has been removed therefrom;

- avoiding any accidental contact between patient blood and health operators;

- when needed, clearing the passage in the tubular body of the catheter for the flow of medicaments to be infused or stop them as needed.

Brief description of the drawings

Further features and advantages of the invention will be more readily apparent upon reading of the detailed description of a preferred non exclusive embodiment of an anti-reflux catheter, which is shown as a non limiting example by the annexed drawings, in which:

FIG. 1 is a perspective view of an anti-reflux catheter of the invention, in which the introducer needle is completely retracted;

FIG. 2 is a side view of the anti-reflux catheter of Figure 1, without the introducer needle;

FIG. 3 is a perspective, enlarged view of a possible embodiment of the anti-reflux catheter;

FIG. 4 is a longitudinal sectional view of the anti-reflux catheter according to the embodiment of Figure 3, in a clear passage state;

FIG. 5 is a cross sectional view of the anti-reflux catheter according to the embodiment of Figure 3, in the same clear passage state;

FIG. 6 is a longitudinal sectional view of the anti-reflux catheter according to the embodiment of Figure 3, in a closed passage state;

FIG. 7 is a cross sectional view of the anti-reflux catheter according to the embodiment of Figure 3, in the same closed passage state;

FIG. 8 is a cross half-sectional view of the catheter of Figure 3, in a clear passage state;

FIG. 9 is a cross half-sectional view of the catheter of Figure 3, in a

closed passage state;

FIG. 10 is a longitudinal sectional view of an anti-reflux catheter according to a further possible embodiment, in a clear passage state;

FIG. 11 is the corresponding cross sectional view of the anti-reflux catheter of Figure 10, in the clear passage state;

FIG. 12 is a longitudinal sectional view of the anti-reflux catheter of Figure 10, in a closed passage state;

FIG. 13 is the corresponding cross sectional view of the anti-reflux catheter of Figure 12, in the closed passage state;

FIG. 14 is a perspective, enlarged view of the further possible embodiment of the anti-reflux catheter of Figure 10.

Detailed description of a preferred embodiment

Referring to the figures, numeral 1 generally designates an anti-reflux catheter of the invention, hereinafter simply catheter 1, which comprises a central body 2 having a substantially tubular, frustoconical shape, and defining therein a chamber 3 for the passage of fluid medicaments to be infused into a blood vessel of a patient

Two wings 4 bilaterally extend from the central body 2, and provide two surfaces for the catheter 1 to be laid and attached to the epidermis of the patient, near its insertion point.

A tubular flexible cannula 5 extends from a distal end 2A of the body 2 and is combined with the body 2 to form the catheter 1.

The end 2B of the body 2 that faces away from the cannula 5 is formed with an opening whose outer contour has a standard connection profile which is designed to be coupled to a mating-profile of a concurrent drug delivery tube, not shown.

A sleeve 7 made of an elastically flexible material is coaxially arranged in the chamber 3, with its outer surface adhering to the inner walls of the chamber 3, and defines a central lumen 12.

A transverse opening 8 is formed on one side of the body 2 to communicate with the inner chamber 3, and has an outwardly projecting

dimple-like mouthpiece 9.

Typically, this mouthpiece 9 has a cylindrical shape, defines therein a sliding chamber 9A and is perpendicular to the body 2.

The mouthpiece 9 may be fitted with a closing cap 10, which has a closing member 11 extending from its inner central portion and received in the chamber 9A, to face the sleeve 7 when the cap 10 is mounted to the mouthpiece 9.

The closing member 11 is preferably formed like a pin 11A, and has one end 11B facing away from the cap 10 that extends through the cap 2, passing through the transverse opening 8, such that in certain conditions it may contact the outer surface of the sleeve 7, as better explained below.

The closing member 11 may be axially moved between two positions: a first idle position (see Figures 4 and 5), in which it is completely lifted from the sleeve 7, and an operating position in which it is moved toward the sleeve, and presses it until it blocks its central lumen (see Figures 6 and 7).

The cap 10 and the mouthpiece 9 may be mutually coupled in two manners, but in both cases the cap 10 is used by the operators as a control member to cause the pin 11a to slide into the chamber 9A between its two positions.

In a first embodiment, as shown in Figures 1 to 8, the cap has a top face with a cylindrical ring 10A extending therefrom, with two bilaterally opposed buttons formed therein, referenced 10B.

The two buttons 10B are elastically compressible and form mutually facing retaining teeth 13 at their respective lower ends, which are slidably received in two respective guide grooves 13A formed in the lateral surface of the mouthpiece 9.

The ring 10A extends on the mouthpece 9, parallel thereto, and defines a gap 14 with the pin 11A, for the mouthpiece 9 to be received and slide therein relative to the cap 10 when the latter is moved toward the body 2, thereby also acting as a slide guide.

Two notches 15 are formed on the outer surface of the mouthpiece, for

the retaining teeth 13 to engage therein, when the cap 10 is completely moved into the operating position of the pin 11A (see Figures 7 and 9).

The ring 10A forms at its base two segments of retaining edges 16 which are adapted to act as stop members for two corresponding additional teeth 17, that are formed at the free end of the mouthpiece 9 such that their engagement against the retaining edges 16 prevents the cap 10 from being pulled out beyond its free end.

Referring now to Figures 10 to 14, a second embodiment of the anti-reflux catheter is shown, and the following description of the second embodiment uses the same references for the parts in common with the first embodiment, for ready understanding.

In greater detail, Figure 14 shows the main feature of this second embodiment, i.e. a double helical groove 20 consisting of two sections formed on the outer surface of the mouthpiece 9 on opposite sides, and having respective straight end segments 20A slightly oriented upward, such that the thrust of the silicone cylinder 7 when it is deformed by pressing reduces the possibility that the cap may be rotated, and hence accidentally opened.

Each of these two groove sections 20 are designed to allow sliding guided engagement of two corresponding pawls projecting out of opposite sides of the inner wall of the cap 10.

As the cap 10 is pressed onto the mouthpiece 9 toward the body 2, these pawls are slidingly guided into the helical grooves 20, whose helical profile causes the cover 10 to rotate during such movements.

By this movement of the cap 10, the pin 11A slides in the chamber 9A and alternately assumes the two possible positions, i.e. the operating position in which it transversely presses down the sleeve 7 until it obstructs its central lumen 12 (see Figures 12 and 13) or the idle position in which it is completely lifted therefrom (see Figures 10 and 11).

Still with reference to Figure 1 it shall be noted that, in both embodiments, the anti-reflux catheter 1 can be introduced into a blood vessel

of a patient, by means of an introducer needle 30 which has a shaft 31 designed to be coaxially inserted into the flexible tubular cannula 5 to temporarily impart stiffness to the latter, to allow it to extend through the walls of the blood vessel and be adequately introduced therein.

The shaft 31 is supported by a control handle 33 located at one proximal end facing away from the tip 32.

The operation is as follows; the catheter 1 is introduced into a blood vessel of a patient in a known manner, i.e. by an injection with the help of the introducer needle 30.

As soon as the catheter 1 has been properly positioned, the operator pulls the introducer needle 30 away from the cannula 5 and the central body 2 until it is entirely removed from the end 2A of the latter.

In order to prevent the blood in the blood vessel from flowing out of the catheter 1, the operator acts on the cap 10, by causing it to slide on the mouthpiece 9 it toward the body 2.

In the first embodiment of the catheter, the operator typically presses the cap 10, and this will cause the pin 11A to move from the idle position to the operating position in which it crushes the sleeve 7, by sliding in the chamber 9A, until it occludes its central lumen 12 and prevents the passage of reflux blood from the blood vessel.

The cap 10 moves perpendicular to the body 2 and is guided by the teeth 13 which slide in the corresponding grooves 13A formed in the mouthpiece 9 almost along their entire travel.

As soon as the pin 11A reaches its final operating position, the teeth 13 engage in their respective notches 5 and hold the cap 10, and hence the pin 11A in the operating position in which they occlude the lumen 12 as long as is required by the operator to couple the end of a drug feeding tube to the connector 6 for infusion of the drug into the patient.

Once such connection is completed, the operator will press the two buttons 10B, which cause the teeth 13 to be disengaged from their respective notches 15, thereby allowing the cap 10 and the pin 11A to be lifted from the

sleeve 7, and to clear the passage through the lumen.

This operation may be repeated if the operator has to disconnect a drug delivery tube and connect another tube for administration of a different drug.

In the second embodiment of the catheter 1, after removal of the introducer needle 30 from the catheter 1 the operator prevents blood reflux by still acting on the cap 10, i.e. by screwing it down on the mouthpiece 9 such that it can be progressively lowered toward the body 2.

Such downward motion, like in the previous embodiment, causes the pin 11A to slide into the chamber 9A and to consequently progressively crush the sleeve 7 in the transverse direction until the lumen of the latter is completely obstructed, thereby preventing blood reflux from the vessel of the patient.

The screw motion of the cap 10 is allowed by engagement of the two pawls 21 in the corresponding helical grooves 20 and, when the pawls 21 reach the bottom end of the helical grooves 20 they are held by the upward end segments 20A thereof, whereby the cap 10 is retained in the operating position of the pin 11A.

While the pin 11A obstructs the lumen 12 of the sleeve 7, the operator may complete, as described above, the procedure for coupling the connector 6 to a concurrent end of a drug feeding tube, or may replace a tube with another, without any risk of outward reflux of patient blood.

When the connection or replacement of the tube has been completed, the operator acts on the cap 10 again to impart an unscrewing movement thereto, thereby causing the pin 11A to be lifted from the sleeve 7 and clearing the passage through the lumen 12 thereof.

The invention has been found to fulfill the intended objects.

The invention so conceived is susceptible to changes and variants within the inventive concept.

Also, all the details may be replaced by other technical equivalent elements.

In its practical implementation, any material, shape and size may be used as needed, without departure from the scope as defined by the following claims.

CLAIMS

1. An anti-reflux catheter comprising:

- A support center body (2) having an inner longitudinal passage chamber (3), briefly inner chamber (3);

- A cannula (5) prolonging from one end (2A) of the center body (2) and connected to the inner chamber (3);

- A transversal opening (8) crossing the center body (2) and communicating with the inner chamber (3);

- A prolonging extension (9) of the transversal opening (8) toward the outside;

- A flexible sleeve (7) longitudinally and coaxially fitted in the inner chamber (3) in correspondence with the transversal opening (8) and having an outer surface facing said transversal opening (8);

characterized in that pressing means (10, 11) acting on said sleeve (7) and movable between a deactivated position or an activated position, and vice versa, are associated with said transversal opening (8).

2. A catheter as claimed in claim 1, wherein said pressing means (10, 11) are activated from the outside.

3. A catheter as claimed in claim 1 or 2, wherein said pressing means comprise:

- A maneuvering member (10) slidingly coupled to said extension (9) and to be alternatively positioned between a deactivated position raised from said center body (2) or an activated position lowered toward said center body (2);

- A shutter (11) actuated by said maneuvering member (10) and slidingly received in a sliding chamber (9A) defined inside said extension (9), said shutter (11) having an active contact end (11B) with the outer surface of said sleeve (7) and an opposing end connected to said maneuvering member (10).

4. A catheter as claimed in claim 3, wherein said maneuvering member is a plug (10) fitted on said extension (9).

5. A catheter as claimed in anyone of preceding claims, wherein between said plug (10) and extension (9) guide means (13, 13A; 20, 21) between said deactivated position and activated position are interposed.

6. A catheter as claimed in claim 5, wherein said guide means comprise at least a coupling between a concave member (13A; 20) and a convex member (13; 21) engaging said concave member (13A; 20).

7. A catheter as claimed in claim 6, wherein said concave element comprises at least a groove (13A; 20) obtained in the outer surface of said extension (9) and said convex element comprises at least an in relief body (13; 21) from an inner surface of said plug (10).

8. A catheter as claimed in claim 6, wherein said groove is chosen between a straight groove (13A) or a an helical groove (20).

9. A catheter as claimed in anyone of preceding claims, wherein between said groove (13A; 20) and said plug (10) temporary retention means (15; 20A) of said plug (10) in said activated position are provided for.

10. A catheter as claimed in claim 9, wherein said temporary retention means comprise:

- At least one flexible button (10B) obtained in said plug and shaping at least a retention tooth (13);
- A cavity (13A) obtained in the outer surface of said extension (9) wherein said retention tooth (13) is removably engaged when said plug (10) is in said activated position.

11. A catheter as claimed in claim 9, wherein said temporary retention means comprise:

- At least one end segment (20A) of said helical groove (20);
- A pawl (21) projecting from said plug (10) and removably engaged in said end segment (20A) when said plug (10) is in said activated position.

12. A catheter as claimed in claim 11, wherein said end segment (20A) is counter-sloped with respect of said helical groove (20).

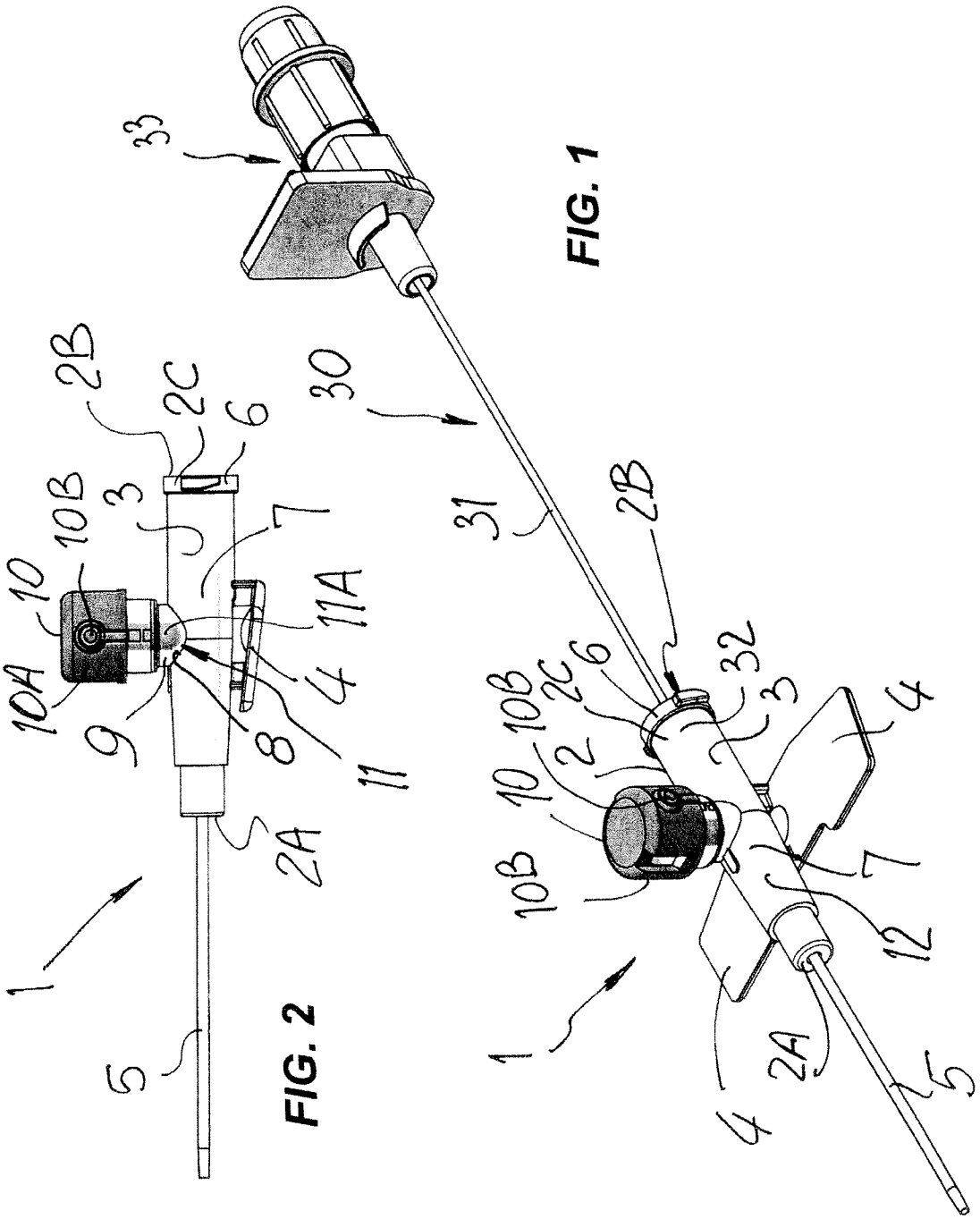

FIG. 1

FIG. 2

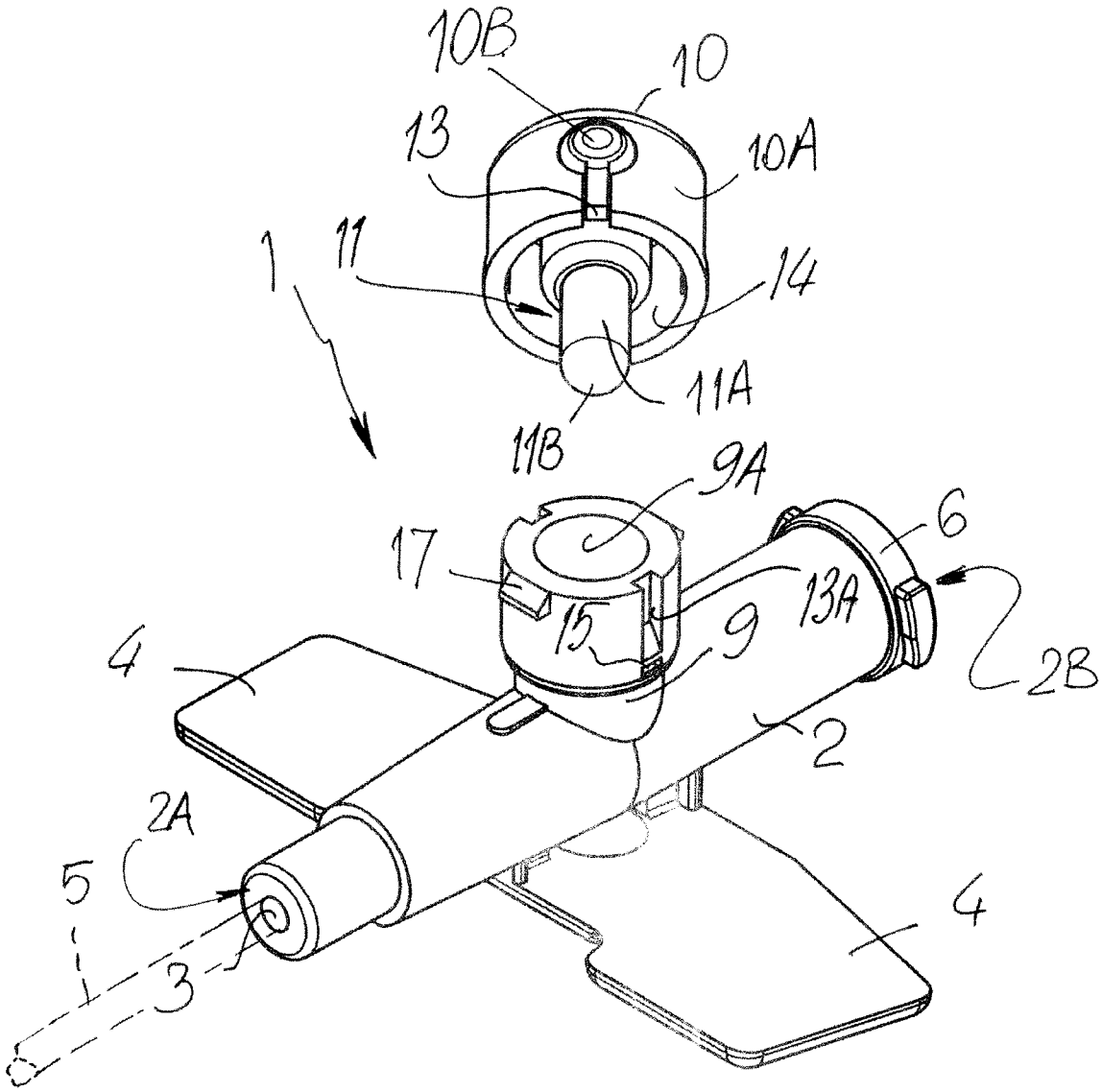

FIG. 3

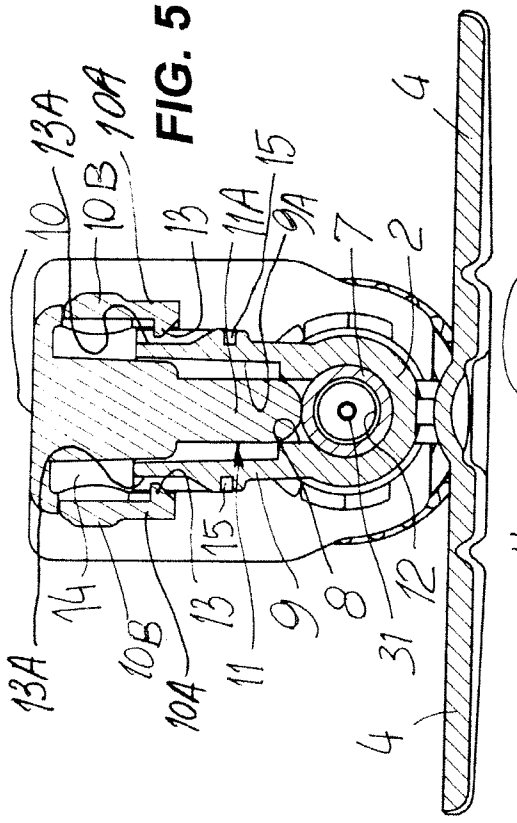

FIG. 5

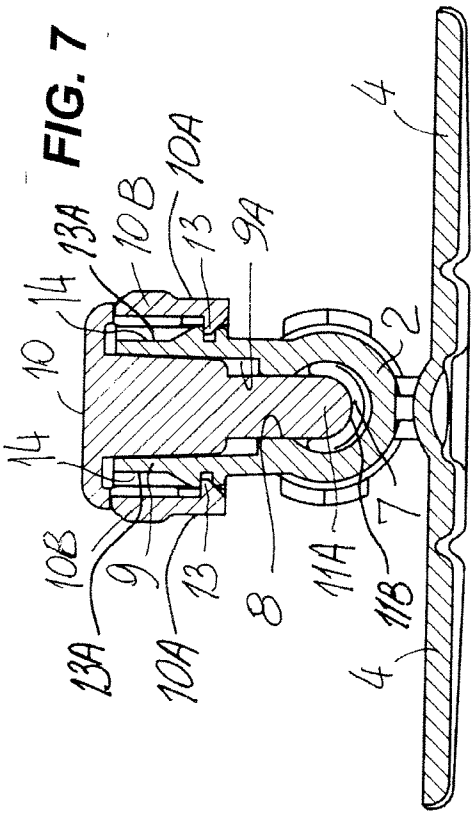

FIG. 7

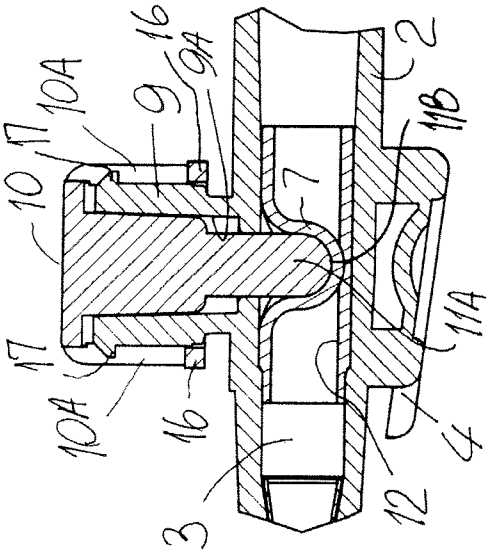

FIG. 6

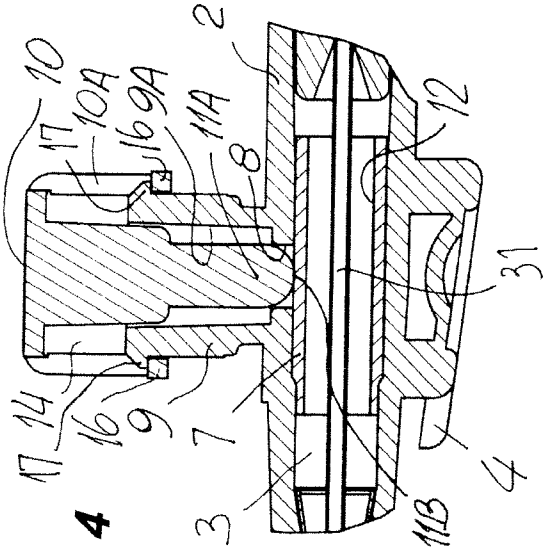

FIG. 4

FIG. 9

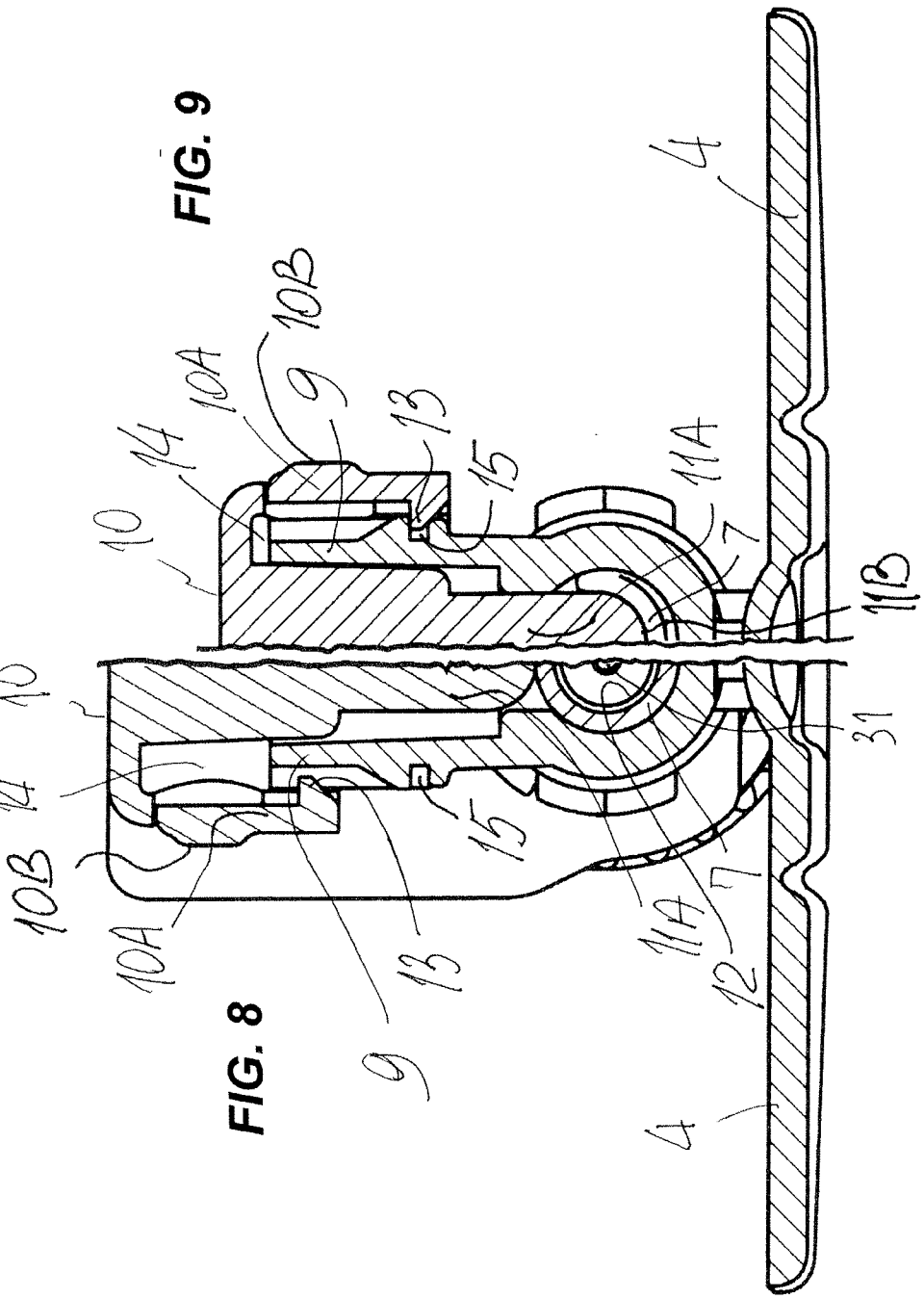

FIG. 8

FIG. 13

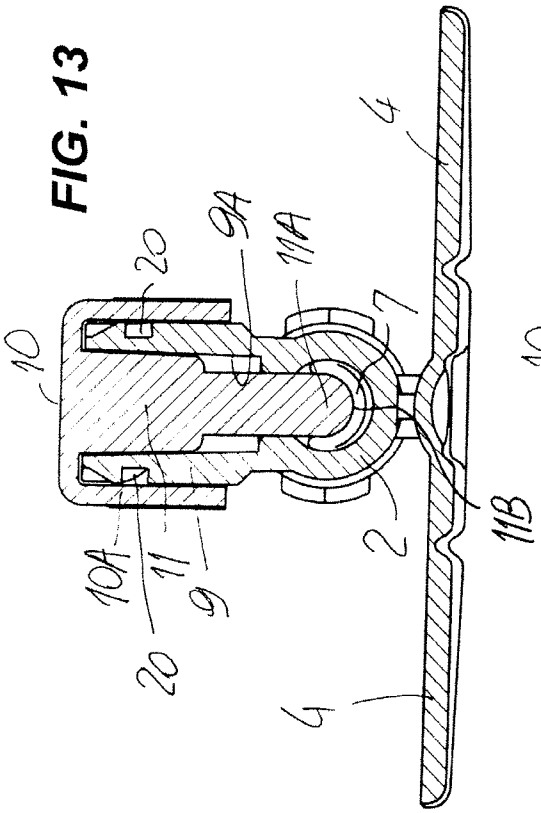

FIG. 12

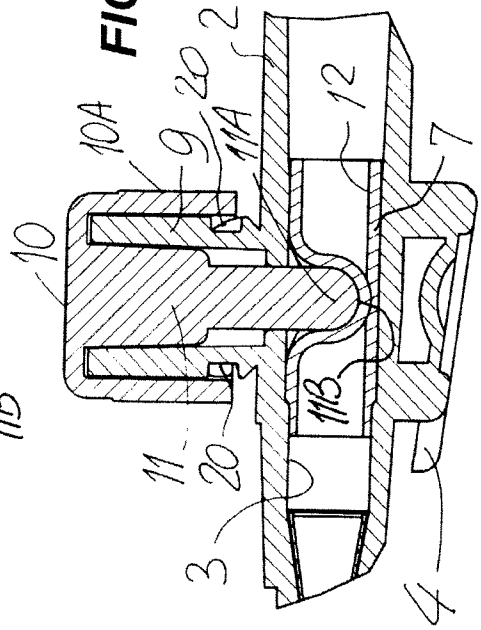

FIG. 11

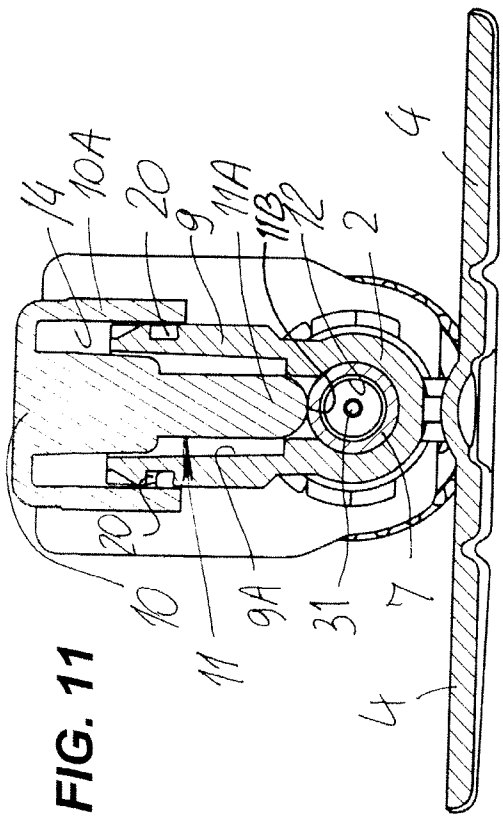

FIG. 10

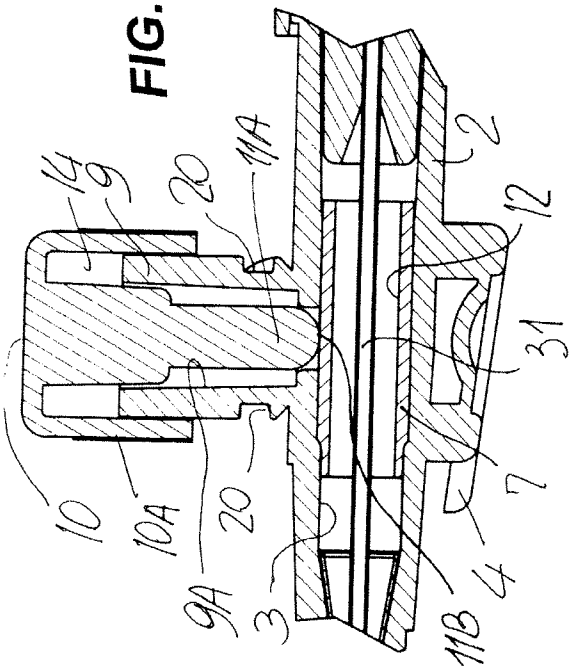

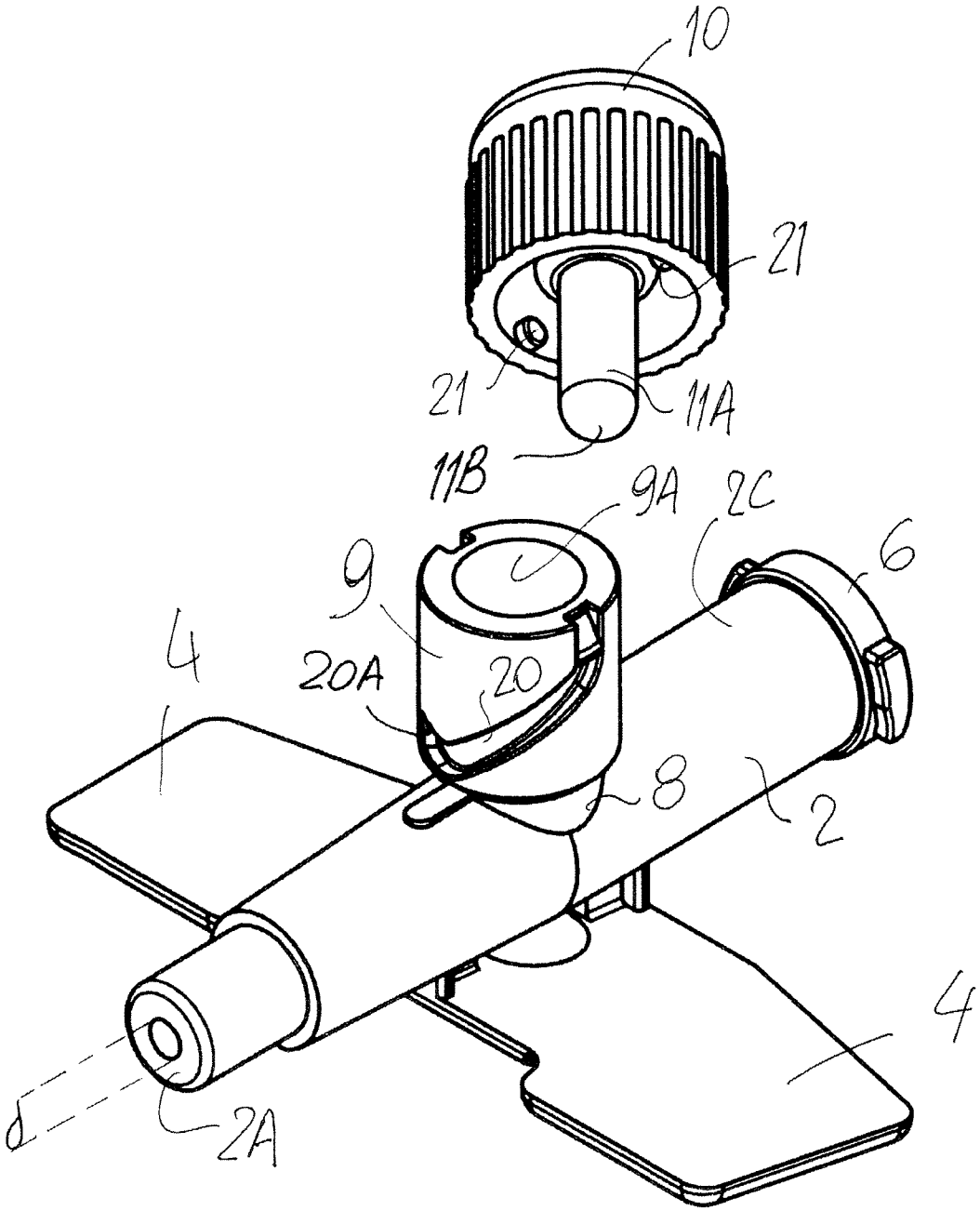

FIG. 14

INTERNATIONAL SEARCH REPORT

International application No
PCT/IB2015/051666

A. CLASSIFICATION OF SUBJECT MATTER
INV. A61M25/00 A61M25/06 A61M39/06 A61M39/22 A61M39/28
ADD.

According to International Patent Classification (IPC) or to both national classification and IPC

B. FIELDS SEARCHED

Minimum documentation searched (classification system followed by classification symbols)
A61M

Documentation searched other than minimum documentation to the extent that such documents are included in the fields searched

Electronic data base consulted during the international search (name of data base and, where practicable, search terms used)
EPO-Internal

C. DOCUMENTS CONSIDERED TO BE RELEVANT

Category*	Citation of document, with indication, where appropriate, of the relevant passages	Relevant to claim No.
X	WO 96/26753 A1 (MIGADA INC [US]; RAZ HAIM [IL]; ROGEL EITAN [IL]) 6 September 1996 (1996-09-06) page 1, lines 1-3; figures 4,5,12 page 3, lines 12-27 page 4, lines 3-13,28-32 page 5, lines 1-7	1-12
X	US 4 960 259 A (SUNNANVAEDER LARS [DE] ET AL) 2 October 1990 (1990-10-02) column 5, lines 29-68; figures 1,5 columns 6,7	1-12
X	WO 2005/011800 A1 (HOMERTON UNIVERSITY HOSPITAL N [GB]; MENON-JOHANSSON ANATOLE S [GB]) 10 February 2005 (2005-02-10) pages 9,10; figures 5a,6a	1-12

-/--

[X] Further documents are listed in the continuation of Box C.

[X] See patent family annex.

* Special categories of cited documents :

"A" document defining the general state of the art which is not considered to be of particular relevance

"E" earlier application or patent but published on or after the international filing date

"L" document which may throw doubts on priority claim(s) or which is cited to establish the publication date of another citation or other special reason (as specified)

"O" document referring to an oral disclosure, use, exhibition or other means

"P" document published prior to the international filing date but later than the priority date claimed

"T" later document published after the international filing date or priority date and not in conflict with the application but cited to understand the principle or theory underlying the invention

"X" document of particular relevance; the claimed invention cannot be considered novel or cannot be considered to involve an inventive step when the document is taken alone

"Y" document of particular relevance; the claimed invention cannot be considered to involve an inventive step when the document is combined with one or more other such documents, such combination being obvious to a person skilled in the art

"&" document member of the same patent family

Date of the actual completion of the international search	Date of mailing of the international search report
11 June 2015	19/06/2015

Name and mailing address of the ISA/	Authorized officer
European Patent Office, P.B. 5818 Patentlaan 2 NL - 2280 HV Rijswijk Tel. (+31-70) 340-2040, Fax: (+31-70) 340-3016	Bielsa, David

INTERNATIONAL SEARCH REPORT

International application No
PCT/IB2015/051666

C(Continuation). DOCUMENTS CONSIDERED TO BE RELEVANT

Category*	Citation of document, with indication, where appropriate, of the relevant passages	Relevant to claim No.
X	EP 0 502 321 A1 (JOKA KATHETERTECHNIK GMBH [DE]) 9 September 1992 (1992-09-09) column 4, lines 10-58; figures 5,7 column 5 column 6, lines 1-22	1-12
X	WO 2004/009171 A1 (UNIV GOETTINGEN GEORG AUGUST [DE]; HUSCHMAND NIA ABDOLHAMID [DE]) 29 January 2004 (2004-01-29) pages 5-7; figures 3,4,5	1-12

INTERNATIONAL SEARCH REPORT

Information on patent family members

International application No
PCT/IB2015/051666

Patent document cited in search report	Publication date	Patent family member(s)	Publication date
WO 9626753 A1	06-09-1996	AU 5174496 A	18-09-1996
		EP 0957948 A1	24-11-1999
		IL 112814 A	22-02-1998
		WO 9626753 A1	06-09-1996
US 4960259 A	02-10-1990	DE 3731242 A1	30-03-1989
		EP 0307743 A1	22-03-1989
		ES 2032912 T3	01-03-1993
		US 4960259 A	02-10-1990
WO 2005011800 A1	10-02-2005	NONE	
EP 0502321 A1	09-09-1992	DE 4107044 A1	10-09-1992
		EP 0502321 A1	09-09-1992
WO 2004009171 A1	29-01-2004	AU 2003254627 A1	09-02-2004
		DE 10232114 A1	05-02-2004
		WO 2004009171 A1	29-01-2004