Innovation, Sciences et Développement économique Canada
Office de la Propriété Intellectuelle du Canada

Innovation, Science and Economic Development Canada
Canadian Intellectual Property Office

CA 3231489 A1 2023/03/23

(21) 3 231 489

(12) DEMANDE DE BREVET CANADIEN
CANADIAN PATENT APPLICATION

(13) A1

(86) **Date de dépôt PCT/PCT Filing Date:** 2022/09/14
(87) **Date publication PCT/PCT Publication Date:** 2023/03/23
(85) **Entrée phase nationale/National Entry:** 2024/03/11
(86) **N° demande PCT/PCT Application No.:** EP 2022/075539
(87) **N° publication PCT/PCT Publication No.:** 2023/041589
(30) **Priorité/Priority:** 2021/09/16 (EP21197271.6)

(51) **Cl.Int./Int.Cl.** ***B41J 2/175*** (2006.01),
B41J 2/335 (2006.01)

(71) **Demandeur/Applicant:**
SICPA HOLDING SA, CH

(72) **Inventeur/Inventor:**
MORELLO, GIOVANNI, IT

(74) **Agent:** OSLER, HOSKIN & HARCOURT LLP

(54) **Titre : CARTOUCHE, TETE D'IMPRESSION A JET D'ENCRE ET IMPRIMANTE A JET D'ENCRE**
(54) **Title: CARTRIDGE, INK JET PRINT HEAD AND INK JET PRINTER**

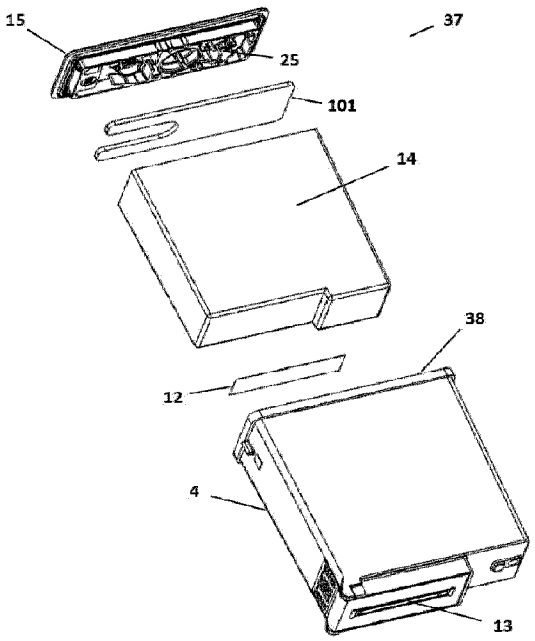

Figure 6a – Exploded view

(57) **Abrégé/Abstract:**
The present invention relates to the field of inkjet printing technology. The cartridges, whose ink reservoir is in communication with the external environment through a venting hole, are subject to ink leakage when the external pressure changes significantly after ink filling. The present invention provides a cartridge (37) comprising: a cartridge body (4); a cartridge lid (15); and a soft member (101) between the cartridge lid (15) and the opening (38) of the cartridge body (4), when the cartridge lid (15) is mounted to the cartridge body (4), the ribs (23) on the cartridge lid (15) abut against the soft member (101) so that a sealing contact is formed therebetween to form an expansion space (25) able to contain all or most of the ink displaced from the ink reservoir. The present invention also provides an ink jet print head and an ink jet printer.

Date Submitted: 2024/03/11

CA App. No.: 3231489

Abstract:

The present invention relates to the field of inkjet printing technology. The cartridges, whose ink reservoir is in communication with the external environment through a venting hole, are subject to ink leakage when the external pressure changes significantly after ink filling. The present invention provides a cartridge (37) comprising: a cartridge body (4); a cartridge lid (15); and a soft member (101) between the cartridge lid (15) and the opening (38) of the cartridge body (4), when the cartridge lid (15) is mounted to the cartridge body (4), the ribs (23) on the cartridge lid (15) abut against the soft member (101) so that a sealing contact is formed therebetween to form an expansion space (25) able to contain all or most of the ink displaced from the ink reservoir. The present invention also provides an ink jet print head and an ink jet printer.

CARTRIDGE, INK JET PRINT HEAD AND INK JET PRINTER

FIELD OF THE INVENTION

[0001] The present invention relates to the field of ink jet printing technology, in particular, relates to preventing ink from leaking outside a cartridge from a venting hole due to shipment and/or use of an ink jet print head at an altitude different from that of the factory, and more in particular, relates to a cartridge, an ink jet print head and an ink jet printer.

BACKGROUND OF THE INVENTION

[0002] As illustrated in Figures 1a, 1b and 2, a cartridge 37 of an ink jet print head comprises a cartridge body 4 and a cartridge lid 15 for covering an opening 38 of the cartridge body 4. An ink reservoir 10 for containing ink is formed within the cartridge body 4. The cartridge body 4 further comprises an ink flow aperture 13 communicating the ink reservoir 10 with the ejection chambers of the ink jet print head, wherein the ink flow aperture 13 is in communication with the ink reservoir 10 through a filter 12 and a pipe 11.

[0003] The ink flow through ejection nozzles of ejection chambers of an ink jet print head must be accurately controlled, because it's one of the essential prerequisites for achieving high-end quality prints with an ink jet printer. One system that assists in providing this amount of control of the ink flow is a backpressure system which creates a slightly negative pressure in the liquid contained within an ink reservoir of a cartridge of the ink jet print head. The negative pressure in the liquid prevents unintentional leakage of ink. Otherwise, such a leakage may occur when the ink jet print head using the ink is idle or the cartridge is exposed to sudden accelerations during the handling.

[0004] As illustrated in Figures 1a, 1b and 2, a possible backpressure system that is well known in the art employs a porous member 14 (e.g. an open-cell foam), a fibrous member or a combination of the two members inserted into the ink reservoir 10 of the cartridge 37 to create negative pressure in the liquid contained within the ink reservoir 10 produced by the capillary effect of the network of pores or between the fibers, as described in the patent EP 3302983 B1.

[0005] When the backpressure is generated by the capillary force, originating from the porous member 14 inserted into the ink reservoir 10, the ink reservoir 10 must be in communication with the external environment. In other words, the boundary liquid surface within the porous member 14 must be

CA 03231489 2024-3-11

at the atmospheric pressure. If the ink reservoir 10 is not in communication with the external environment, while the ink level in the ink reservoir 10 decreases because of the ink ejection during the printing, the pressure of the liquid contained in the ink reservoir 10 would drop down far beyond the suitable backpressure value, preventing the ink jet print head from ejecting further.

[0006] To provide a suitable communication with the external environment, the cartridge lid 15 is generally provided with a venting hole 17 except for an ink filling hole 16. Specifically, as illustrated in Figures 1a, 1b, 2, 3a and 3b, the cartridge lid 15 is provided with an ink filling hole 16 through which a needle penetrates most the way across the porous member 14 for filling the ink reservoir 10 with ink and a venting hole 17 for communicating the ink reservoir 10 with the external environment. The venting hole 17 is disposed at one end of a shallow serpentine venting channel 18 which is molded in the outer surface of the cartridge lid 15. The ink filling hole 16 is quite large and is closed after (ink) filling with an adhesive label 19 or with a plug (not illustrated) to prevent the excessive evaporation of the ink. The adhesive label 19 overlaps not only the ink filling hole 16, but also the venting hole 17. The adhesive label 19 closes atop most of the shallow serpentine venting channel 18, acting as a ceiling surface. The venting outlet 20 at the very end portion of the shallow serpentine venting channel 18 remains uncovered, allowing the ink reservoir 10 to get in communication with the external environment. The small cross section and the suitable length of the shallow serpentine venting channel 18 keep the evaporation rate low, at the same time maintain the pressure balance between the inside and outside of the ink reservoir 10 even during printing. Of course, also two separated labels (not illustrated) could be suitably used for the ink filling hole 16 and the venting hole 17, respectively. The inner surface of the cartridge lid 15, as illustrated in Figure 4, besides the ink filling hole 16 and the venting hole 17 is generally provided with a peripheral sealing frame 22 suitable for ultrasonic bonding with the cartridge body 4 and a plurality of ribs 23 and an additional outer perimetrical reinforcing frame 41, which are designed to strengthen suitably the cartridge lid 15, preventing any deformation or break of the cartridge lid 15. Normally such ribs 23 and outer perimetrical reinforcing frame 41 are obtained at once during molding process of the cartridge lid 15.

[0007] The ink filled into the ink reservoir 10 soaks a large portion of the porous member 14. The capillary force prevents the ink from getting out of the porous member 14. Nevertheless, the ink has a certain amount of inner mobility across the porous member 14, in particularly when the porous member 14 is a fibrous member that easily allows the ink movement along the fiber direction. Thus, the handling

CA 03231489 2024-3-11

of an ink jet print head filled with ink could cause some air to be trapped into the porous member 14. This trapped air could even possibly be surrounded by the ink. Some additional trapping of air could even happen in the pipes 11 because of possible wrong operations or lack of hermetic sealing between the ink filling hole 16 and the needle during the ink filling phase. Briefly, there is a certain possibility that, in an ink jet print head, some islands of air remain trapped within the ink.

[0008] After filling, the atmospheric pressure that surrounds the ink jet print head is present also within the portion of the ink reservoir 10 which is devoid of ink, whilst in the liquid contained in the ink jet print head the resulting pressure is due to the atmospheric pressure, increased by the hydrostatic pressure of the liquid column and diminished by the capillary pressure of the porous member 14. The capillarity of the porous member 14, which depends on the pore size, as well as on the surface tension of the ink and the wettability of the porous member material, is carefully designed so as to provide a lower pressure for the liquid contained in the ink reservoir with respect to the external environment.

[0009] Before the ink jet print head is ready for shipment, the ejection nozzle is sealed with a suitable adhesive tape, in order to prevent the ink evaporation and to protect the ejection nozzle from particle contamination or mechanical scratches. The ink jet print head is finally placed in a plastic cup and thermally sealed with a double layer plastic-aluminum packing cover. As a result, the ink jet print head turns out to be enclosed in a hermetic container whose internal pressure is the same as the atmospheric pressure at the factory.

[0010] However, during shipping the ink jet print head or when the ink jet print head is to be used in high altitude areas, the hermetic container can be subjected to significant pressure changes. For example, in an air shipment, the cargo hold can be brought to a low pressure during the flight. For another example, the final destination of the ink jet print head could lie at an environmental pressure very different from that of the factory due to different altitudes. Changes in the environmental pressure of the hermetic container can cause an unbalance between the inner pressure of the hermetic container and the environmental pressure. The unbalanced inner pressure of the hermetic container pulls outwards the packing cover, so that the inner pressure of the hermetic container is lowered with respect to the original pressure in the factory.

[0011] Since the ink reservoir is in communication via the venting hole with the region outside the cartridge, the air trapped within the porous member could expand if the environment is at a lower pressure than the factory's one, pulling out the ink, which could leak out from the venting hole, either

CA 03231489 2024-3-11

when the cartridge is within the hermetic container or when the final user flips off the packing cover.

[0012] Sealing the venting outlet with an additional label or a removable plug could work only to prevent the ink from leaking within the sealed cup, but it wouldn't work if the final destination pressure is significantly lower than the factory's one: removing the additional label or the plug would cause a sudden unbalance of the inner pressure, spraying the ink outside the venting outlet. Such a phenomenon would likely arise also if no air is trapped within the porous member. The abrupt perturbation of the inner pressure of the hermetic container could easily produce an ink spray out of the venting hole anyhow, because the communication between the liquid surface in the ink reservoir and the outside takes place via a short distance and the ink can flow outwards almost directly.

[0013] The situation where the ink sprays out of the venting hole 17 is schematically depicted in Figure 2. The reciprocal position of the ink reservoir 10 and the cartridge lid 15 is illustrated in an exploded view, where the abrupt ink stream 21, caused by the pressure unbalance, is schematically represented by the arrows. The ink covers rapidly the short and direct travel towards the ink filling hole 16 and the venting hole 17 of the cartridge lid 5. The ink filling hole 16 is sealed by the adhesive label 19 (Figure 3b), which also overlaps the venting hole 17 and most of the shallow serpentine venting channel 18, leaving a venting outlet 20 in communication with the outside. The volume of the shallow serpentine venting channel 18 under the adhesive label 19 is very small and can be rapidly filled by the ink, which turns out to spray out from the venting outlet 20 at the very end portion of the shallow serpentine venting channel 18.

SUMMARY OF THE INVENTION

[0014] In order to solve the above technical problems, the solution of the present invention consists of providing a cartridge with an expansion space connected with the venting hole, in order to gather any possible ink stream caused by an unbalance between the inner pressure of the ink reservoir and the environmental pressure outside the ink reservoir due to environmental pressure changes, preventing the ink from leaking outside the cartridge.

[0015] In a first aspect of the present invention, a cartridge is provided. The cartridge comprises: a cartridge body with an opening and an ink flow aperture, wherein an ink reservoir for containing ink is formed within the cartridge body; a cartridge lid for covering the opening, wherein the cartridge lid is provided with an ink filling hole and a venting hole and with ribs on the inner face thereof; and a soft

CA 03231489 2024-3-11

member provided between the cartridge lid and the opening and overlapping the venting hole but not overlapping the ink filling hole, when the cartridge lid is mounted to the cartridge body and covers the opening, the ribs abut against the soft member so that a sealing contact is formed between the ribs and the soft member and an expansion space is formed between the cartridge lid and the soft member, wherein the expansion space has an inlet through which ink is able to flow into the expansion space from the ink reservoir, and the expansion space is in communication with external environment through the venting hole.

[0016] The cartridge of the present invention can prevent the ink from reaching the region outside the cartridge in a short travel, through a direct communication. On the contrary, the ink is forced to go through a longer expansion space, damping the vehemence of the possible spray and providing an inner expansion volume or inner expansion space, able to contain all or most of the ink displaced from the ink reservoir due to the pressure unbalance. Moreover, the expansion space is simply formed by the sealing contact between the ribs on the cartridge lid and the soft member without needing a real bonding between the cartridge lid and the soft member since the soft member is slightly pliable and can match very well with the ribs on the cartridge lid, and thus the manufacturing process is simpler, is easy to be introduced into the manufacturing line and is cost effective.

[0017] Preferably, the cartridge comprises a porous member and/or a fibrous member inserted into the ink reservoir, and the soft member is sized to be housed accurately into the cartridge body, just above the porous member or the fibrous member and is provided with an open space in correspondence with the ink filling hole.

[0018] With this implementation, the soft member is simply inserted into the cartridge body, after inserting the porous member and/or the fibrous member, and placed onto the latter, without the need of any alignment. Subsequently, the cartridge lid can be mounted to the cartridge body. During the mounting, the ribs on the cartridge lid are subject to a certain pressure, which is partially transferred to the soft member, realizing a sealing contact. Moreover, the soft member cannot slide off and it remains in its stable position even during the cartridge handling, guaranteeing the correct contact with the ribs on the overlying cartridge lid.

[0019] Preferably, the soft member is provided with two wings spaced apart at one end of the soft member to form the open space which extends up to the peripheral edge of the soft member. With this implementation, the ink filling of the cartridge turns out to be simpler.

[0020] Preferably, the soft member is provided with a through-hole aligned with the ink filling hole.

[0021] Preferably, the soft member is made of rubber.

[0022] Preferably, the soft member is a plate-shaped member with a thickness of 1 mm to 2 mm. The thickness of 1mm to 2mm is adequate for forming the expansion space by the cartridge lid and the soft member. Moreover, the small irregularities of the rib edges introduced in the lid molding process can even be compensated.

[0023] Preferably, the expansion space contains porous material. The porous material could enhance the damping of the ink flow vehemence, without compromising the fluidic communication with the outside.

[0024] Preferably, the expansion space is an expansion circuit which is circuitous. Giving the expansion space a circuitous shape would enhance both the dumping effect and the available volume needed to go through. The circuitous expansion circuit forces the ink flowing into the expansion space from the inlet need to go through a longer flow path and take more time before spraying out from the venting hole.

[0025] Preferably, the expansion space comprises a plurality of expansion chambers fluidly communicated through narrow communication passageways, and each expansion chamber is surrounded by the ribs connected to the cartridge lid and abutting against the soft member. The abrupt change in width along the expansion circuit, due to the plurality of narrow communication passageways, contributes to the flow damping.

[0026] Preferably, the ribs comprise two curvilinear ribs surrounding the venting hole.

[0027] Preferably, two neighboring ribs are spaced apart from each other to form the narrow communication passageways.

[0028] Preferably, the narrow communication passageway(s) is/are formed in the ribs.

[0029] In a second aspect of the present invention, an ink jet print head is provided. The ink jet print head comprises a cartridge mentioned above.

[0030] Preferably, the ink jet print head is a thermal ink jet print head comprising a microfluidic device attached to the cartridge, wherein the microfluidic device comprises: a plurality of resistors; a plurality of ejection chambers disposed above the resistors and in fluid communication with the ink flow aperture; and a nozzle plate covering the ejection chambers and provided with ejection nozzles for spraying ink from the ejection chambers.

CA 03231489 2024-3-11

[0031] In a third aspect of the present invention, an ink jet printer is provided. The ink jet printer comprises an ink jet print head mentioned above.

BRIEF DESCRIPTION OF THE DRAWINGS

[0032] Non-restrictive and non-exhaustive embodiments of the present invention will be described by examples referring to the drawings below, wherein:

[0033] Figures 1a and 1b illustrate exploded views of a known cartridge.

[0034] Figure 2 illustrates a schematic diagram of the cartridge in Figures 1a and 1b.

[0035] Figure 3a illustrates a schematic diagram of the outer surface of a cartridge lid of the cartridge in Figures 1a and 1b, with the adhesive label removed.

[0036] Figure 3b illustrates a schematic diagram of the outer surface of the cartridge lid of the cartridge in Figures 1a and 1b.

[0037] Figure 4 illustrates a bottom view the cartridge lid of a known cartridge.

[0038] Figure 5 illustrates a perspective schematic view of an ink jet print head according to an embodiment of the present invention.

[0039] Figures 6a and 6b illustrate exploded views of a cartridge of the ink jet print head in Figure 5.

[0040] Figure 7 illustrates a partial section schematic view of a microfluidic device of the ink jet print head in Figure 5.

[0041] Figure 8 illustrates a perspective schematic diagram of the cartridge lid according to one embodiment of the present invention.

[0042] Figure 9 illustrates a bottom view of the cartridge lid according to one embodiment of the present invention.

[0043] Figure 10 illustrates a perspective schematic diagram of a soft member according to one embodiment of the present invention.

[0044] Figure 11 illustrates a bottom view of the soft member according to one embodiment of the present invention.

[0045] Figure 12 illustrates a perspective schematic diagram of the cartridge lid according to another embodiment of the present invention.

[0046] Figure 13 illustrates a bottom view of the cartridge lid according to another embodiment of the present invention.

CA 03231489 2024-3-11

[0047] Figure 14 illustrates a schematic diagram of the inner surface of the cartridge lid according to still another embodiment of the present invention.

[0048] Figure 15 illustrates a cross section view of the cartridge lid.

DETAILED DESCRIPTION OF THE EMBODIMENTS

[0049] In order to make the above and other features and advantages of the invention clearer, the invention is further described in combination with the attached drawings below. It is to be understood that the specific embodiments of the present invention are illustrative and not intended to be restrictive.

[0050] The present invention provides a cartridge, an ink jet print head and an ink jet printer. Figure 5 illustrates a perspective schematic view of an ink jet print head 1 according to an embodiment of the present invention. In the present embodiment, the ink jet print head 1 is a thermal ink jet print head, such as a bubble ink jet print head. In other embodiments, the ink jet print head 1 may also be a piezoelectric ink jet print head.

[0051] The ink jet print head 1 comprises one or more cartridges 37. The cartridges 37 may contain ink with different colors respectively. Figures 6a and 6b illustrate exploded views of a cartridge of the ink jet print head in Figure 5. As illustrated in Figures 6a and 6b, the cartridge 37 comprises a cartridge body 4 which is generally made of plastic material. The cartridge body 4 has an opening 38 and an ink flow aperture 13. An ink reservoir 10 for containing ink is formed within the cartridge body 4. A filtering device 12 is provided between the ink flow aperture 13 and the ink reservoir 10. In this embodiment, the filtering device 12 is a mesh filter. Optionally, the filtering device 12 is in communication with the ink flow aperture 13 through a pipe 11 (for example, a standpipe) which is topped with the filtering device 12 at the boundary with the ink reservoir 10 and terminates at the other end with the ink flow aperture 13.

[0052] As illustrated in Figure 5, the ink jet print head 1 further comprises a microfluidic device 2 attached to the cartridge 37. For example, the microfluidic device 2 is adhered to the cartridge body 4 of the cartridge 37 through sealing glue, which provides the joint between the microfluidic device 2 and the cartridge 37 with both mechanical strength and hermeticity. The microfluidic device 2 is in fluid communication with the ink flow aperture 13 of the cartridge 37 so that the ink contained in the ink reservoir 10 of the cartridge 37 can flow to the microfluidic device 2 via the ink flow aperture 13. The microfluidic device 2 is electrically activated through contact pads 3.

[0053] Figure 7 illustrates a partial section schematic view of a microfluidic device of the ink jet print

CA 03231489 2024-3-11

head in Figure 5. As illustrated in Figure 7, the microfluidic device 2 comprises a plurality of ejection chambers 6 and a plurality of resistors 5 which are in correspondence with the plurality of ejection chambers 6. The ejection chambers 6 are disposed above the resistors 5 and are a part of the fluidic circuit 7 which is in fluid communication with the ink flow aperture 13 of the cartridge 37. Therefore, it can be said that the ejection chambers 6 are in fluid communication with the ink flow aperture 13. The ink from the ink flow aperture 13 flows in the fluidic circuit 7 and reaches the ejection chambers 6. The fluidic circuit 7 is patterned in a suitable polymer layer called a barrier layer 39. A nozzle plate 8 is disposed on the barrier layer 39 and closes at the top the microfluidic device 2. The nozzle plate 8 also covers the ejection chambers 6. The nozzle plate 8 is provided with an ejection nozzle 9 for each ejection chamber 6. The ejection nozzles 9 are used for spraying ink from the ejection chambers 6. Specifically, a sudden current pulse can be applied on demand through resistors 5, causing the rapid vaporization of a thin layer of the ink. The high value of the vapor pressure causes the expansion of the vapor bubble, which pulls the ink above out of the ejection nozzles 9, producing in turn the ejection of ink droplets. After the ejection, new ink is recalled from the ink reservoir 10 to refill the ejection chambers 6 and the ejection nozzles 9 again.

[0054] As mentioned above, a backpressure system is used in the ink jet print head 1 to assist in providing the control of the ink flow. In this embodiment, as illustrated in Figures 6a and 6b, a porous member 14 (e.g. an open-cell foam) and/or a fibrous member may be inserted into the ink reservoir 10 to create negative pressure in the liquid contained within the ink reservoir 10 produced by the capillary effect of the network of pores or between the fibers. However, other methods could be used to generate a suitable backpressure in the liquid. For example, it could use a blister with an opening, which is in fluidic communication with the pipe and the ejection chambers; and the blister shell is mechanically biased outwardly through a metal spring or some other elastic element. The blister is fluidly isolated from the external environment, apart from the communication opening with the pipe. The elastic component must be carefully calibrated in order to provide the suitable backpressure during the whole lifetime of the ink jet print head.

[0055] As illustrated in Figures 6a and 6b, the cartridge 37 further comprises a cartridge lid 15 for covering the opening 38 of the cartridge body 4. The cartridge lid 15 may be detachably mounted to the cartridge body 4. The cartridge lid 15 may also be permanently mounted to, or in other words, be bonded with the cartridge body 4, e.g., by gluing, ultrasonic welding or any other suitable methods.

CA 03231489 2024-3-11

Specifically, as illustrated in Figures 8 and 9 which illustrate a perspective schematic diagram and a bottom view of the cartridge lid according to one embodiment of the present invention, respectively, a peripheral sealing frame 22 of the cartridge lid 15 may be bonded with the cartridge body 4 so that the opening 38 of the cartridge body 4 is covered by the cartridge lid 15. As illustrated in Figures 6a, 6b, 8 and 9, the cartridge lid 15 is provided with an ink filling hole 16 and a venting hole 17. The filling hole 16 is used for filling the ink reservoir 10 with ink. The venting hole 17 is used for communicating the ink reservoir 10 with the external environment. The venting hole 17 is disposed at one end of a shallow serpentine venting channel 18 which is molded in the outer surface of the cartridge lid 15. The ink filling hole 16 is large, through which an ink filling tool such as a needle can pass to fill ink into the ink reservoir 10. Furthermore, the cartridge lid 15 is provided with ribs 23 on the inner surface thereof. It should be noted that the terms describing the positional relationship mentioned herein such as "outer", "inner", "upper" and "lower" are described with respect to the case where the cartridge lid 15 covers the opening 38 of the cartridge body 4. On the one hand, the ribs 23 are designed to strengthen suitably the cartridge lid 15, preventing any deformation or break of the cartridge lid 15; on the other hand, the ribs 23 form the chamber walls of an expansion space 25, which will be described detailed below.

[0056] To eliminate or, at least, mitigate the effect of an unbalance between the pressure inside the cartridge 37 and the pressure outside the cartridge 37, a specific ink expansion volume or expansion space 25 is created. As illustrated in Figures 6a and 6b, the cartridge 37 further comprises a soft member 101 provided between the cartridge lid 15 and the opening 38 of the cartridge body 4 and overlapping the venting hole 17. It can be understood that the soft member 101 does not overlap the ink filling hole 16 to avoid affecting the ink filling through the ink filling hole 16. When the cartridge lid 15 is mounted to the cartridge body 4 and covers the opening 38 of the cartridge body 4, the ribs 23 provided on the inner surface of the cartridge lid 15 abut against the soft member 101 so that a sealing contact is formed between the ribs 23 and the soft member 101 and an expansion space 25 is formed between the cartridge lid 15 and the soft member 101. As illustrated in Figures 8 and 9, the expansion space 25 has an inlet 26 through which ink is able to flow into the expansion space 25 from the ink reservoir 10, and the expansion space 25 is in communication with external environment through the venting hole 17. The inlet 26 may be provided far away from the venting hole 17. Optionally, the inlet 26 may be provided in the soft member 101. Alternatively, the inlet 26 may be provided between the cartridge lid 15 and the soft member 101. When the cartridge lid 15 covers the opening 38 of the cartridge body 4, the inlet 26 allows

the ink from the ink reservoir 10 to flow into the expansion space 25, and the venting hole 17 put the expansion space 25 in communication with the external environment. The inner surface (e.g. the lower surface) of the cartridge lid 15 acts as the ceiling of the expansion space 25, whilst the outer surface (e.g. the upper surface) of the soft member 101 acts as the floor of the expansion space 25. In one possible embodiment, the soft member 101 is parallel to the cartridge lid 15.

[0057] The purpose of forming the expansion space 25 is to prevent the ink from reaching the region outside the cartridge 37 in a short travel, through a direct communication. On the contrary, the ink is forced to go through a longer expansion space 25, in particular a circuitous expansion path or expansion circuit before reaching the venting hole 17, damping the vehemence of the possible spray and providing an inner expansion volume or inner expansion space 25, able to contain all or most of the ink displaced from the ink reservoir due to the pressure unbalance.

[0058] The soft member 101 is made of soft material, such as rubber (particularly silicone rubber). Figures 10 and 11 illustrate a perspective schematic diagram and a bottom view of a soft member according to one embodiment of the present invention, respectively. As illustrated in Figures 10 and 11, the soft member 101 may be a plate-shaped member, the thickness of which is sufficiently high to get in contact with the ribs 23 on the cartridge lid 15 with a certain pressure, once the latter has been mounted, e.g., ultrasonically bonded, to the cartridge body 4. The mechanical interference and the softness of the soft member 101 are able to provide a good sealing contact, without the need to use any adhesive or glue to attach the soft member 101 to the cartridge lid 15, i.e., without needing a real bonding between the cartridge lid 15 and the soft member 101, since the soft member 101 is slightly pliable and can match very well with the ribs 23 on the cartridge lid 15, and thus the manufacturing process is simpler, is easy to be introduced into the manufacturing line and is cost effective. Generally, the thickness of the plate-shaped soft member 101 is 1 mm to 2 mm, which is adequate for forming the expansion space 25 together with the cartridge lid 15 and can compensate even for the small irregularities of the rib edges introduced in the lid molding process.

[0059] In principle, the soft member 101 only require to overlap a part of the cartridge lid 15 comprising the venting hole 17, e.g., the right half part of the cartridge lid 15 illustrated in Figure 8; however, since the soft member 101 is not attached to cartridge lid 15, the soft member 101 could slip back and forth during the handling of the cartridge in the fabrication process, with the risk to leave part of the expansion space 25 not perfectly closed.

[0060] In a preferred embodiment, the soft member 101 is shaped as illustrated in Figures 10 and 11. The soft member 101 is sized to be housed accurately into the cartridge body 4, just above the porous member 14 or the fibrous member. The position of the soft member 101 above the porous member 14 or the fibrous member is self-adjusting within the cartridge body 4. In other words, the opening 38 of the cartridge body 4 can precisely accommodate the soft member 101 just above the porous member 14 or the fibrous member. It is worthwhile to underline that the porous member 14 or the fibrous member should have a certain stiffness to be able to contrast effectively the pressure exerted by soft member 101. For example, the fibrous member is a piece of fiber, which is quite stiff when it is compressed along the fiber direction. Furthermore, compressed foam could also have a sufficient stiffness.

[0061] The soft member 101 is provided with an open space 103 in correspondence with the ink filling hole 16. The inlet 26 of the expansion space 25 may be in communication with the ink reservoir 10 through the open space 103. In this way, the soft member 101 is simply inserted into the cartridge body 4, after inserting the porous member 14 and/or the fibrous member, and placed onto the latter, without the need of any alignment. Subsequently, the cartridge lid 15 can be mounted to the cartridge body 4. During the mounting, the ribs 23 on the cartridge lid 15 are subject to a certain pressure, which is partially transferred to the soft member 101, realizing a sealing contact. Moreover, the soft member 101 cannot slide off and it remains in its stable position even during the cartridge handling, guaranteeing the correct contact with the ribs 23 on the overlying cartridge lid 15.

[0062] Specifically, as illustrated in Figures 10 and 11, the soft member 101 is provided with two wings 102 which are spaced apart from each other at one end of the soft member 101. The two wings 102 in the soft member 101 have the purpose to form the open space 103 mentioned above to allow the ink reservoir 10 to be filled through the ink filling hole 16 of the cartridge lid 15 without any obstruction, providing at the same time the position stability of the soft member 101 above the porous member 14 or the fibrous member within the cartridge body 4. It can be clearly seen, the open space 103 extends up to the peripheral edge of the soft member 101. In fact, the open space 103 doesn't need to extend up to the peripheral edge of the soft member 101 and a simple inner through-hole provided in the soft member 101 and aligned with the overlying ink filling hole 16 could be sufficient to allow the ink reservoir 10 to be filled through the ink filling hole 16 of the cartridge lid 15 without any obstruction, but the applicant discovered that the ink filling of the ink reservoir 10 turns out to be simpler if the wing solution is adopted.

[0063] Preferably, the expansion space 25 is an expansion circuit which is circuitous. Giving the

expansion space 25 a circuitous shape would enhance both the dumping effect and the available volume needed to go through. The circuitous expansion circuit forces the ink flowing into the expansion space 25 from the inlet 26 need to go through a longer flow path and take more time before spraying out from the venting hole 17.

[0064] One kind of the circuitous expansion circuit can be considered as a sequence of expansion chambers put in communication through narrow communication passageways. Specifically, as illustrated in Figures 8 and 9, the expansion space 25 may comprise a plurality of expansion chambers which are fluidly communicated through narrow communication passageways. For example, with reference to Figure 14, the expansion chambers 31 and 32 are put in communication through the narrow communication passageway 33. The abrupt change in width along the expansion circuit, due to the plurality of narrow communication passageways 33, contributes to the flow damping.

[0065] The expansion chambers can be surrounded by chamber walls, i.e., ribs 23 connected in turn to the cartridge lid 15 and abutting against the soft member 101. The expansion chambers can be also surrounded by the outer perimetrical reinforcing frame 41 connected in turn to the cartridge lid 15 and abutting against the soft member 101. The outer perimetrical reinforcing frame 41 protrudes more than the peripheral sealing frame 22. The chamber walls can be achieved by modifying the rib design of the existing cartridge lid (one of them is illustrated in Figure 4) by adding additional parts or modifying length and position of the existing ribs 23, in order to create the chamber walls of the expansion chambers. The chamber walls and the outer perimetrical reinforcing frame 41 can be connected to the cartridge lid 15 using some suitable glue or adhesive or ultrasonic welding, or any other method well known in the art.

[0066] Optionally, the expansion space 25 may contain some porous material. For example, in another embodiment illustrated in Figures 12 and 13, a portion of the expansion space 25 could even contain some porous material 28, in order to enhance the damping of the ink flow vehemence, without compromising the fluidic communication with the outside. The porous material 28 may be contained in only one expansion chamber, or may also be contained in a plurality of expansion chambers or even in all expansion chambers.

[0067] In still another embodiment, some chamber walls of the expansion chambers has a curved profile rather than a rectilinear one, as illustrated in Figure 14. In this embodiment, the chamber walls comprise two curvilinear walls 29 surrounding the venting hole 17. The two curvilinear walls 29 are spaced apart from each other so that two narrow communication passageways 30 for the ink are

CA 03231489 2024-3-11

formed.

[0068] The narrow communication passageways can be obtained in different ways, as illustrated in Figure 15. The cross section of the cartridge lid 15 shows various possible ways to obtain a narrow communication passageway. For example, two neighboring chamber walls are spaced apart from each other and the narrow communication passageway 34 is generated by a gap between two neighboring chamber walls, where the gap extends from the cartridge lid 15 to the soft member 101. For another example, the narrow communication passageway 35 configured as a gap is provided in the chamber wall, and the gap doesn't reach the cartridge lid 15 but there is a riser connecting the two sides of the gap, resulting in a shallow gap. For yet another example, the narrow communication passageway 36 is completely provided in the chamber wall and configured to be a hole throughout the chamber wall. The first two variants can be easily obtained with a standard molding process, whilst the latter requires a more complicated manufacturing process. Anyhow, all of them can be profitably adopted.

[0069] The described embodiments are just examples of the concept of the present invention. The detailed features of the expansion space or expansion circuit could be varied or merged suitably according to the different solutions, without departing from the spirit and scope of the invention. The expansion space integrated in the cartridge lid for the cartridge of the ink jet print head addresses effectively the issues caused by the pressure unbalance between the inside and the outside of the ink reservoir, fixing the logistical drawbacks and enabling the correct use of the ink jet print head at different altitudes.

[0070] Various technical features described above may be combined arbitrarily. Although not all of possible combinations of various technical features are described, but all the combinations of these technical features should be regarded as within the scope described in the present specification provided that they do not conflict.

[0071] Notwithstanding the description of the invention in combination with embodiments, those skilled in the art shall understand that the above description and drawings are only illustrative and not restrictive and the invention is not limited to the embodiments disclosed. Various modifications and variations are possible without departing from the concept of the invention.

CA 03231489 2024-3-11

LIST OF DESIGNATIONS

1	ink jet print head
2	microfluidic device
3	contact pad
4	cartridge body
5	resistor
6	ejection chamber
7	fluidic circuit
8	nozzle plate
9	ejection nozzle
10	ink reservoir
11	pipe
12	filtering device
13	ink flow aperture
14	porous member
15	cartridge lid
16	ink filling hole
17	venting hole
18	shallow serpentine venting channel
19	adhesive label
20	venting outlet
21	ink stream
22	peripheral sealing frame
23	rib
25	expansion space
26	inlet
28	porous material
29	curvilinear wall
30	narrow communication passageway

CA 03231489 2024-3-11

31	expansion chamber
32	expansion chamber
33	narrow communication passageway
34	narrow communication passageway
35	narrow communication passageway
36	narrow communication passageway
37	cartridge
38	opening
39	barrier layer
41	outer perimetrical reinforcing frame
101	soft member
102	wing
103	open space

WHAT IS CLAIMED IS:

1. A cartridge, comprising:

a cartridge body with an opening and an ink flow aperture, wherein an ink reservoir for containing ink is formed within the cartridge body;

a cartridge lid for covering the opening, wherein the cartridge lid is provided with an ink filling hole and a venting hole and with ribs on the inner face thereof; and

a soft member provided between the cartridge lid and the opening and overlapping the venting hole but not overlapping the ink filling hole, when the cartridge lid is mounted to the cartridge body and covers the opening, the ribs abut against the soft member so that a sealing contact is formed between the ribs and the soft member and an expansion space is formed between the cartridge lid and the soft member, wherein the expansion space has an inlet through which ink is able to flow into the expansion space from the ink reservoir, and the expansion space is in communication with external environment through the venting hole.

2. The cartridge according to claim 1, wherein the cartridge comprises a porous member and/or a fibrous member inserted into the ink reservoir, and the soft member is sized to be housed accurately into the cartridge body, just above the porous member or the fibrous member and is provided with an open space in correspondence with the ink filling hole.

3. The cartridge according to claim 2, wherein the soft member is provided with two wings spaced apart at one end of the soft member to form the open space which extends up to the peripheral edge of the soft member.

4. The cartridge according to claim 2, wherein the soft member is provided with a through-hole aligned with the ink filling hole.

5. The cartridge according to any one of claims 1 to 4, wherein the soft member is made of rubber.

6. The cartridge according to claim 5, wherein the soft member is a plate-shaped member with a thickness of 1 mm to 2 mm.

7. The cartridge according to any one of claims 1 to 4, wherein the expansion space contains porous material.

8. The cartridge according to any one of claims 1 to 4, wherein the expansion space is an expansion circuit which is circuitous.

9. The cartridge according to any one of claims 1 to 4, wherein the expansion space comprises a plurality of expansion chambers fluidly communicated through narrow communication passageways, and each expansion chamber is surrounded by the ribs connected to the cartridge lid and abutting against the soft member.

10. The cartridge according to claim 9, wherein the ribs comprise two curvilinear ribs surrounding the venting hole.

11. The cartridge according to claim 9, wherein two neighboring ribs are spaced apart from each other to form the narrow communication passageways.

12. An ink jet print head, comprising a cartridge according to any one of claims 1 to 11.

13. The ink jet print head according to claim 12, wherein the ink jet print head is a thermal ink jet print head comprising a microfluidic device attached to the cartridge, the microfluidic device comprising:

a plurality of resistors;

a plurality of ejection chambers disposed above the resistors and in fluid communication with the ink flow aperture; and

a nozzle plate covering the ejection chambers and provided with ejection nozzles for spraying ink from the ejection chambers.

14. An ink jet printer, comprising an ink jet print head according to claim 12 or 13.

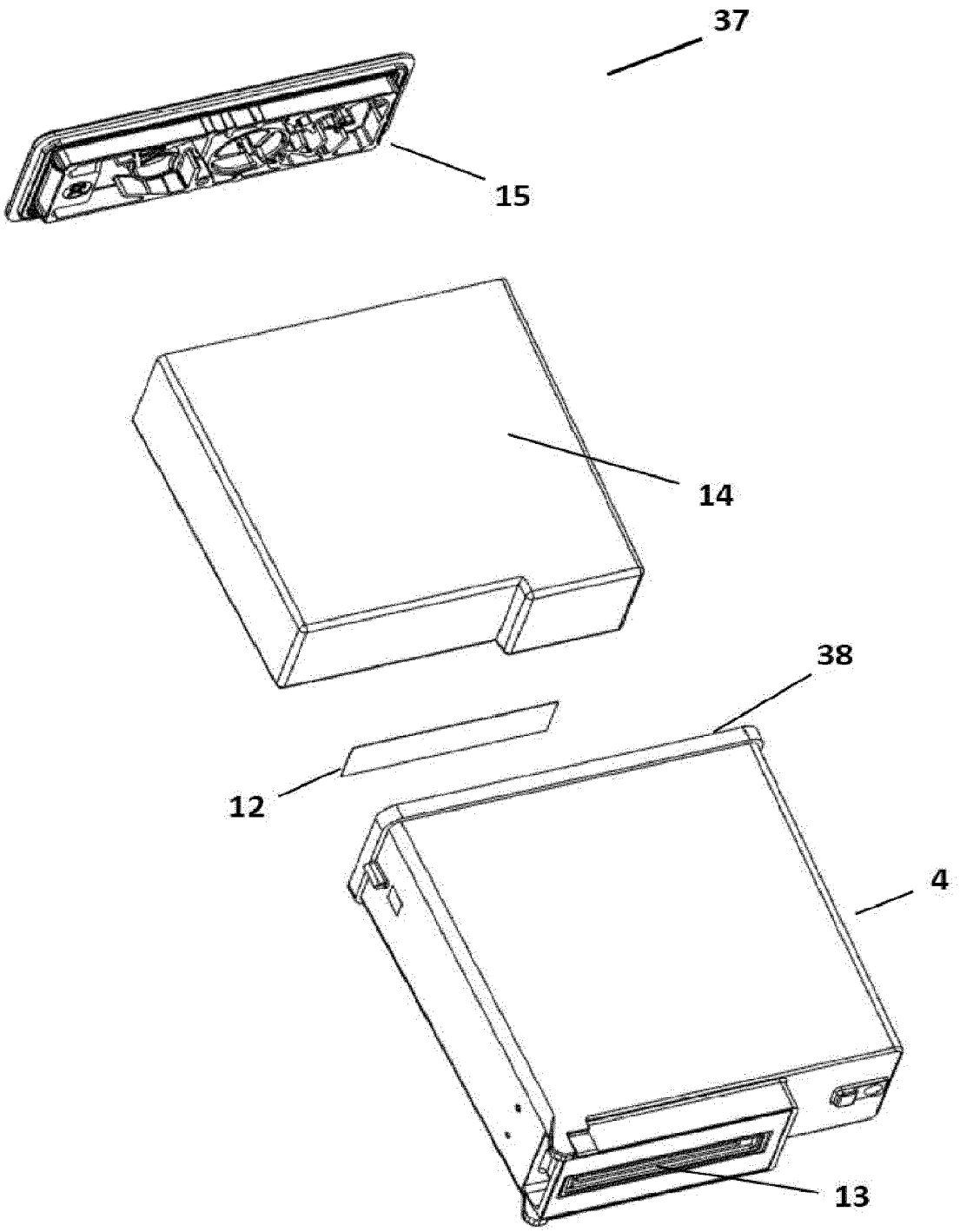

Figure 1a – Exploded view

CA 03231489 2024- 3- 11

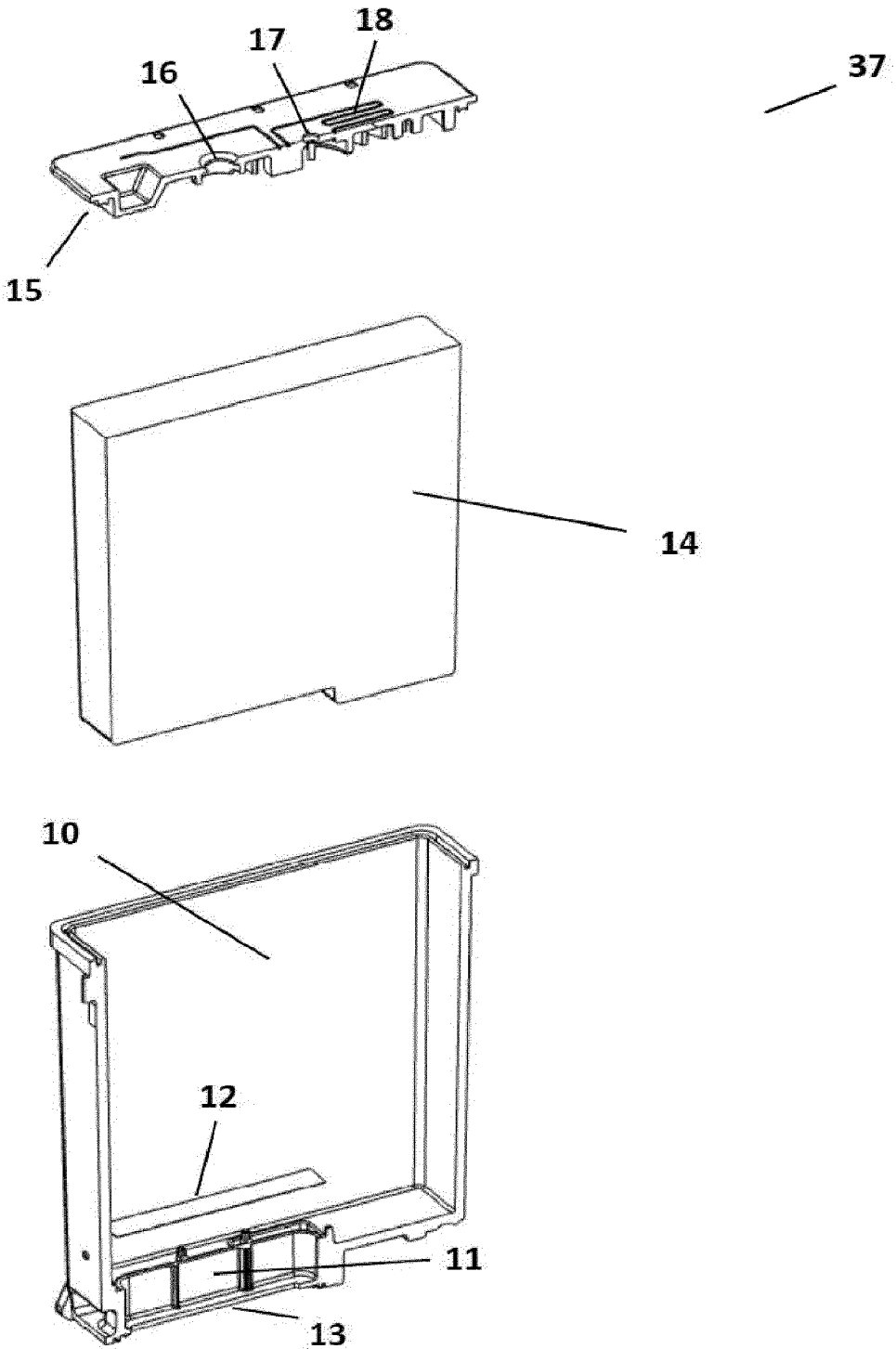

Figure 1b – Exploded view cross section

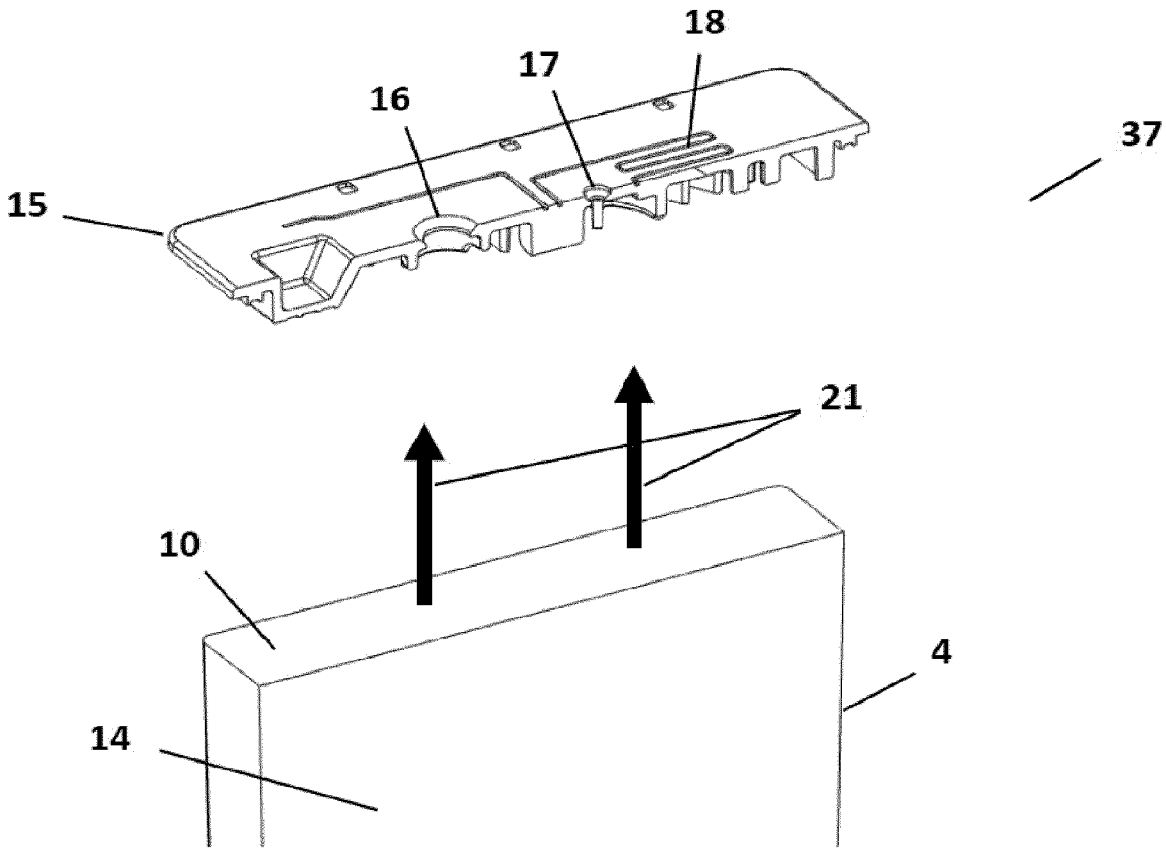

Figure 2

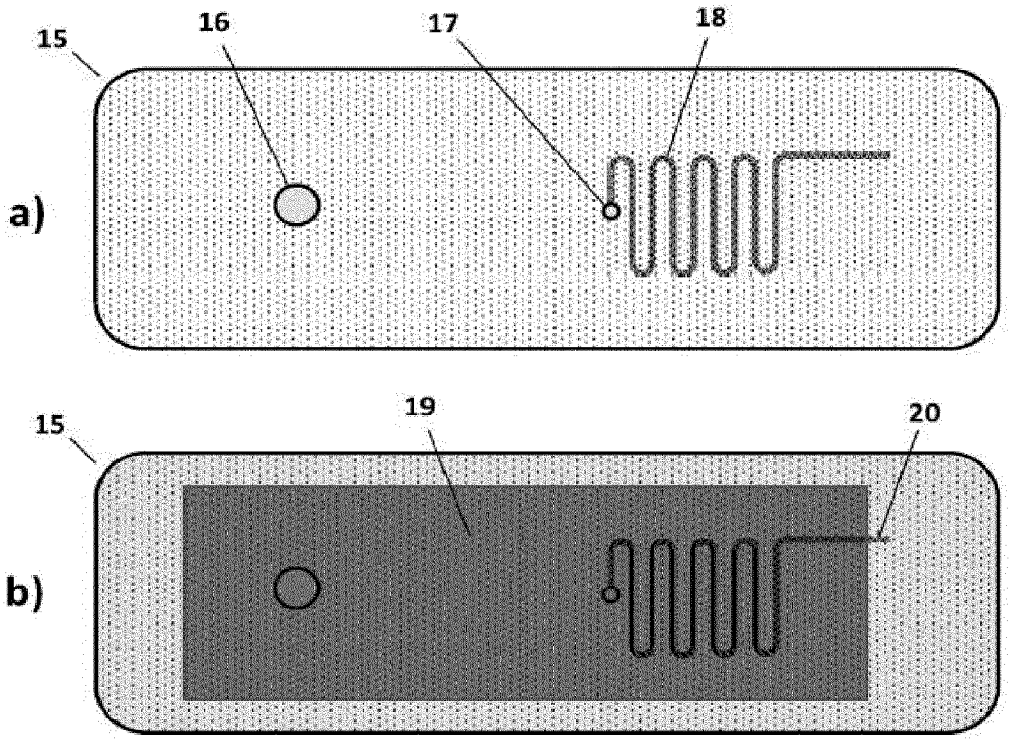

Figure 3

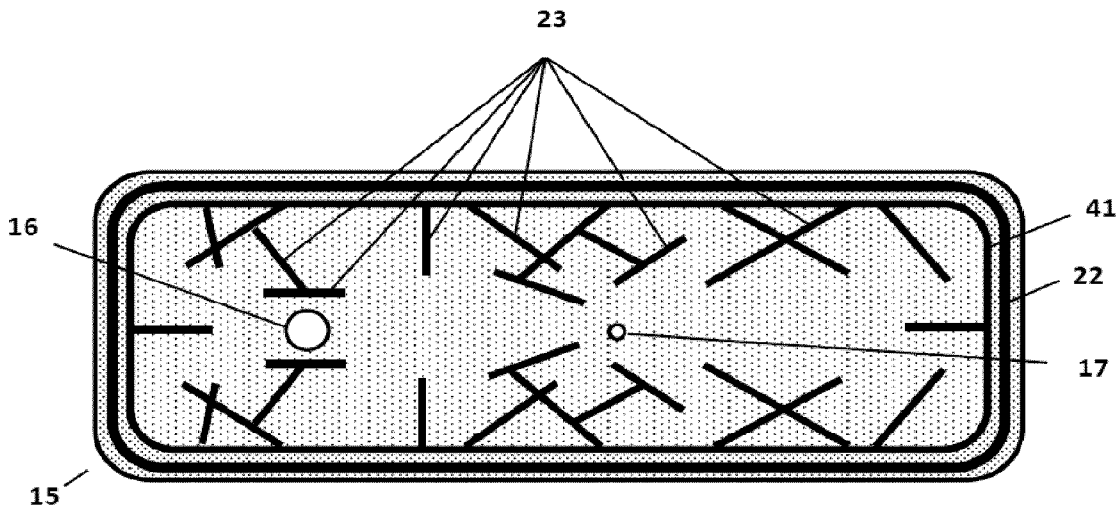

Figure 4

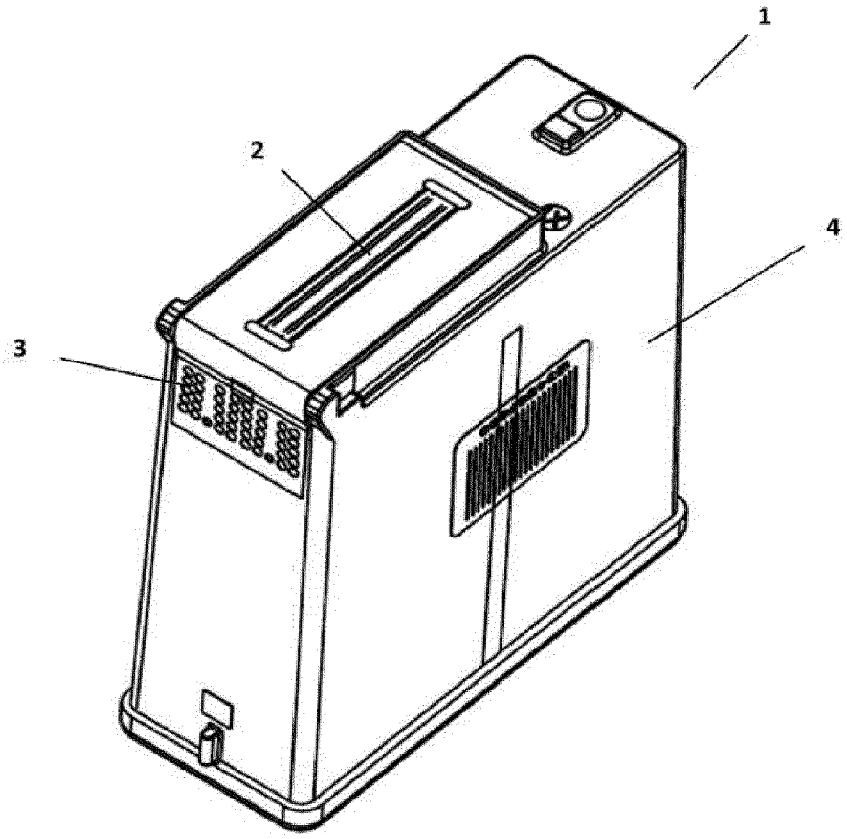

Figure 5

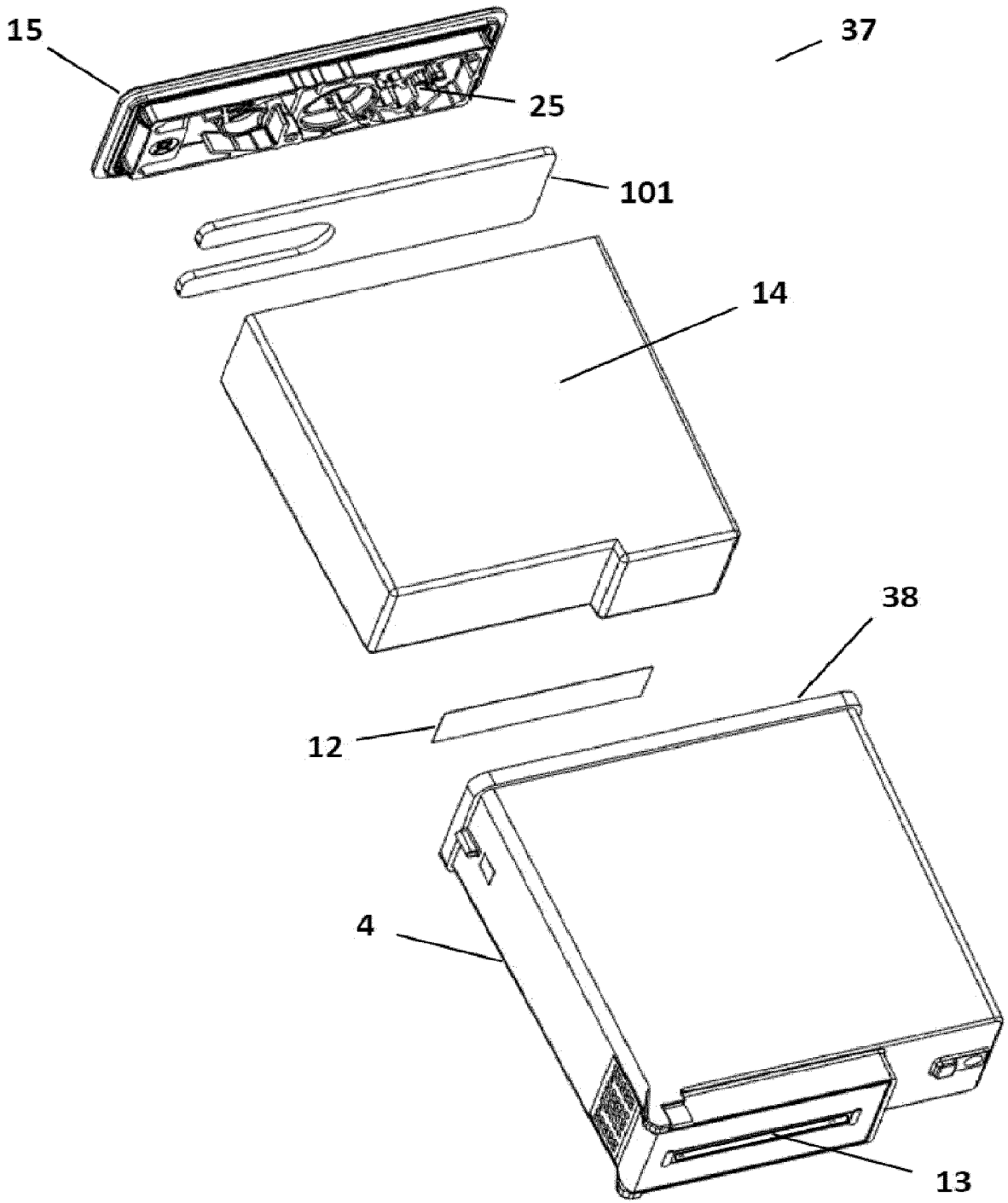

Figure 6a – Exploded view

CA 03231489 2024- 3- 11

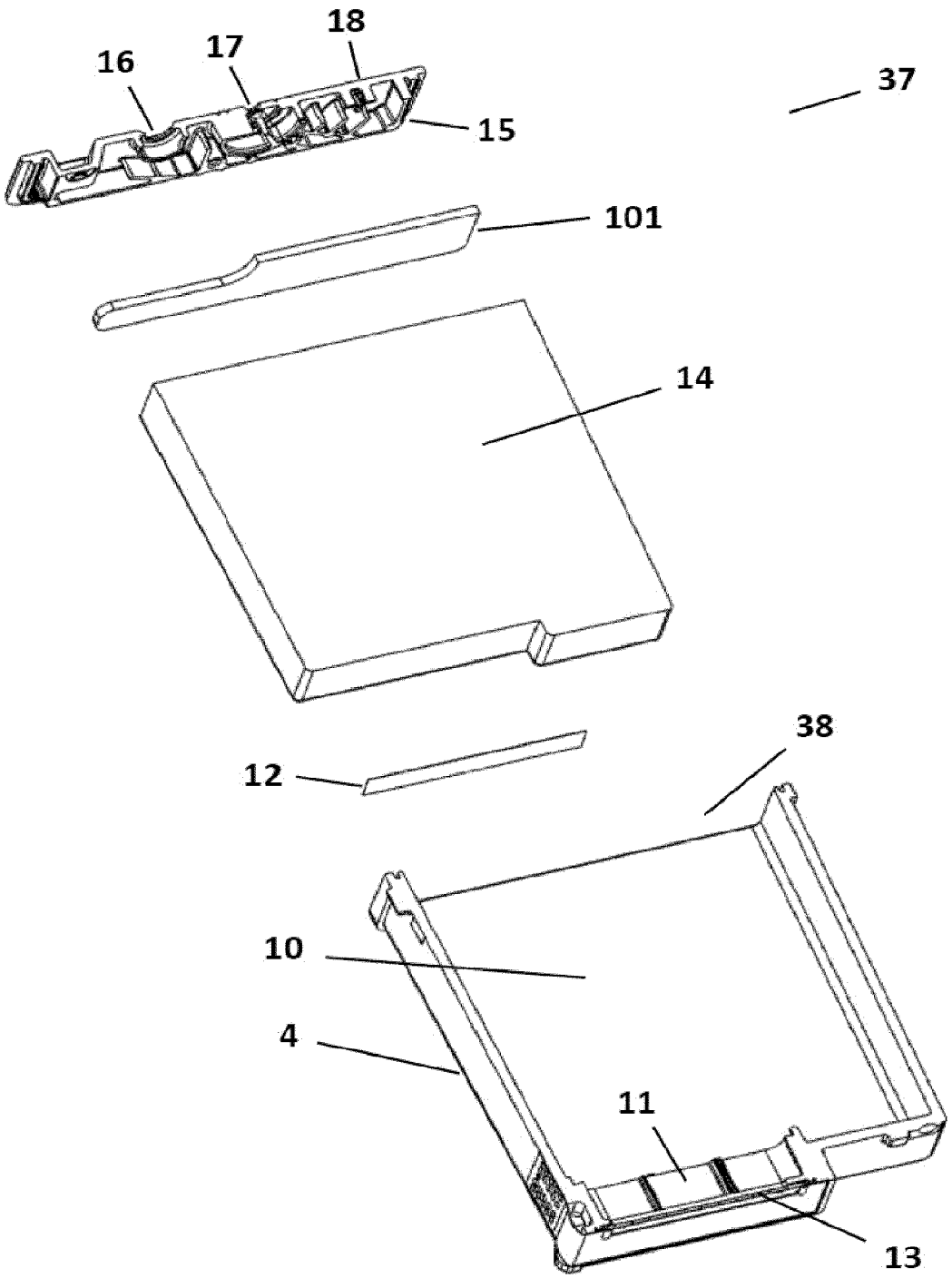

Figure 6b – Exploded view cross section

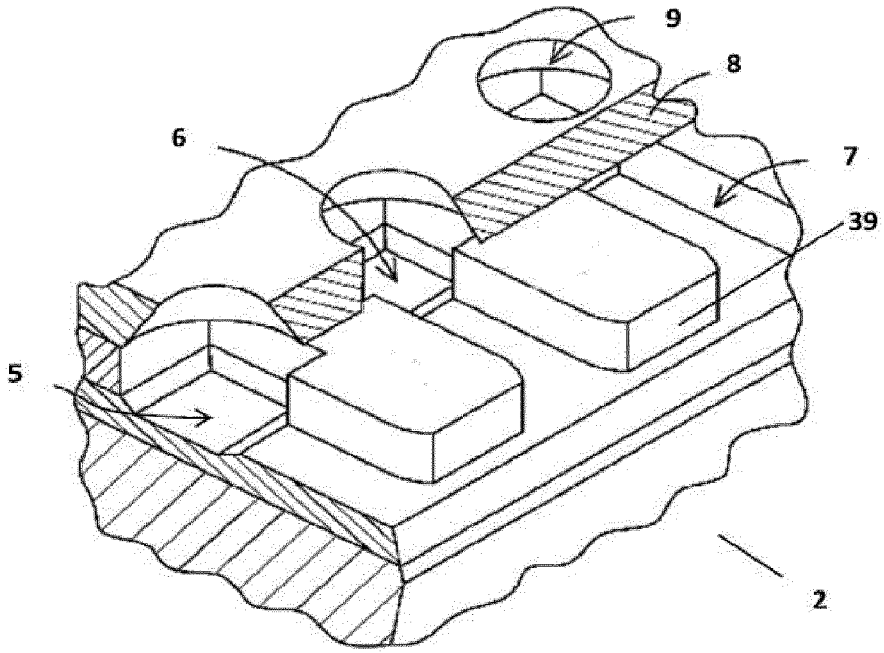

Figure 7

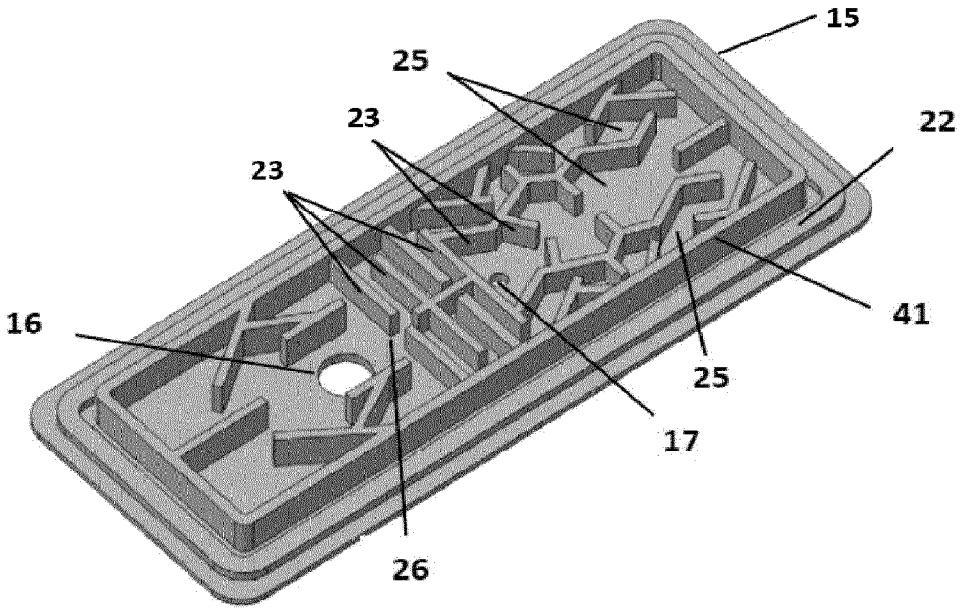

Figure 8

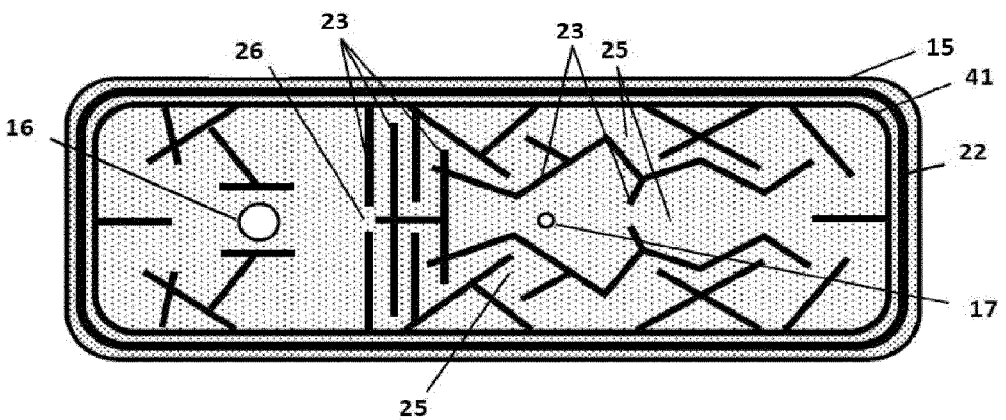

Figure 9

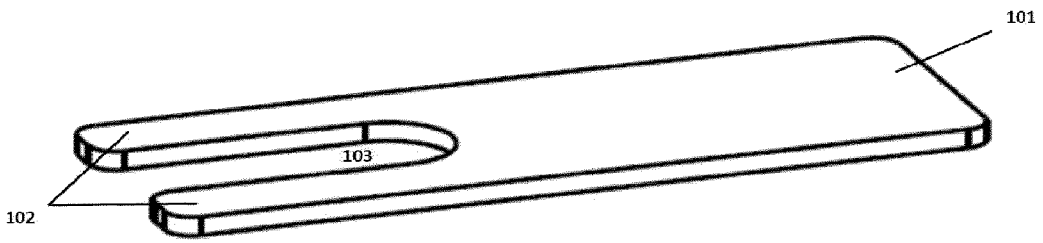

Figure 10

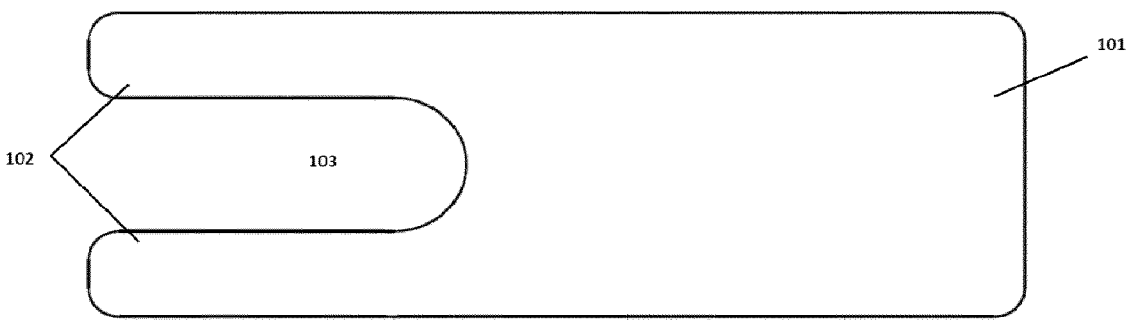

Figure 11

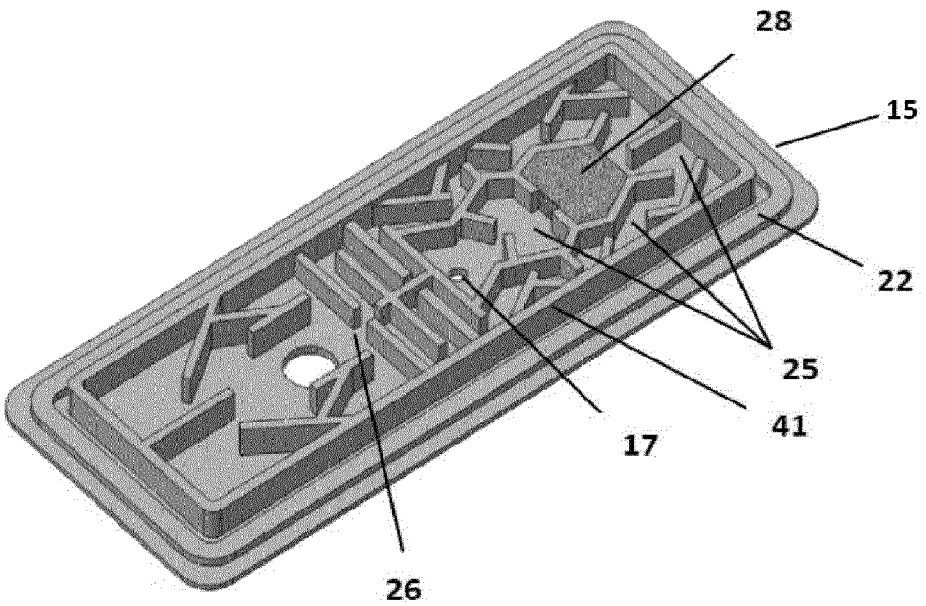

Figure 12

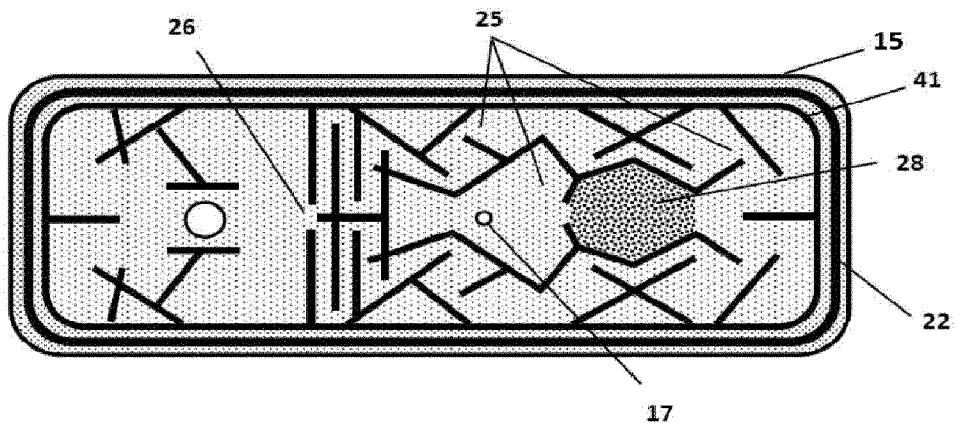

Figure 13

CA 03231489 2024- 3- 11

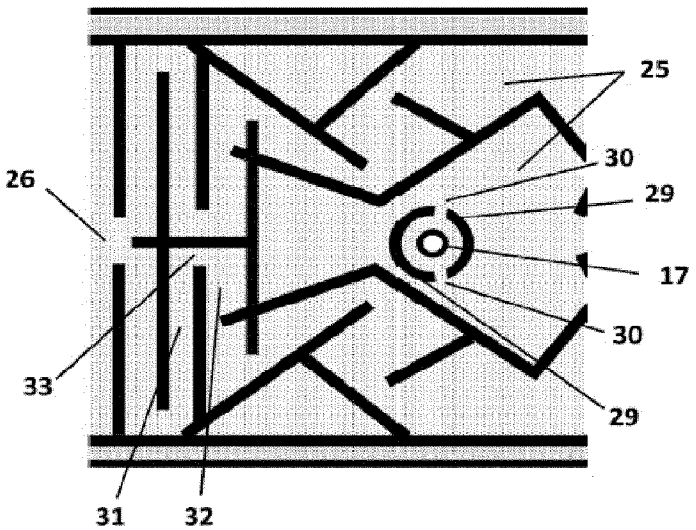

Figure 14

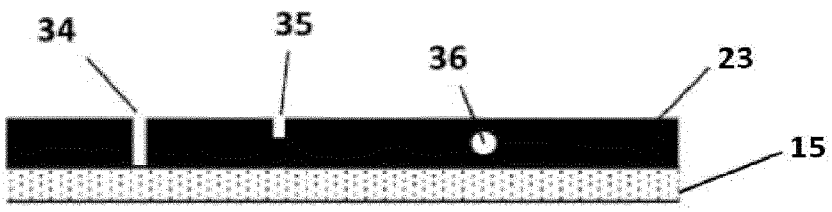

Figure 15

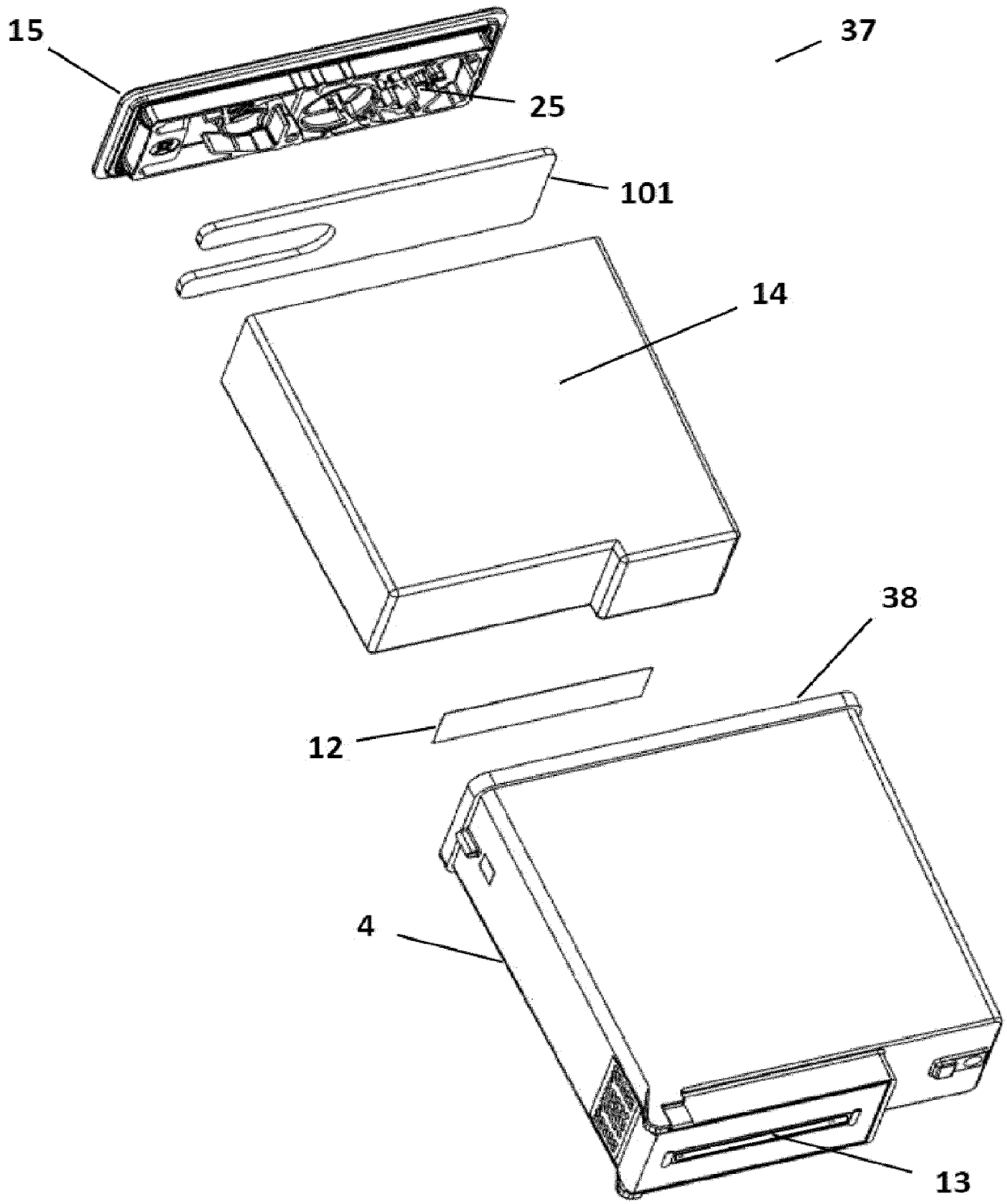

Figure 6a – Exploded view