L. E. ZIMMERMAN.

PAPER HOLDER FOR SCALES.

APPLICATION FILED JUNE 3, 1911.

1,006,892. Patented Oct. 24, 1911.

Fig. 1.

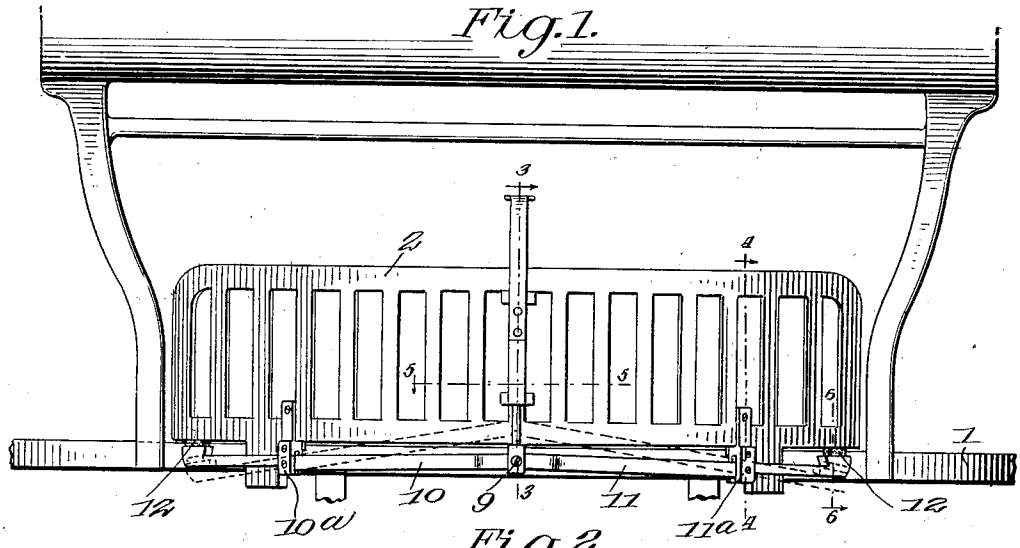

Fig. 2.

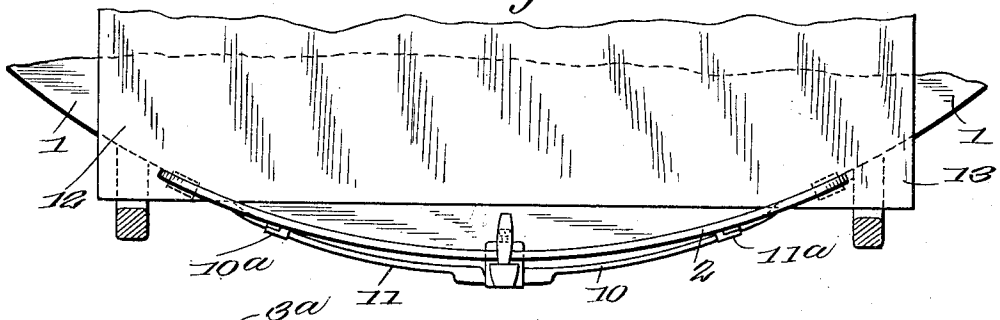

Fig. 3.

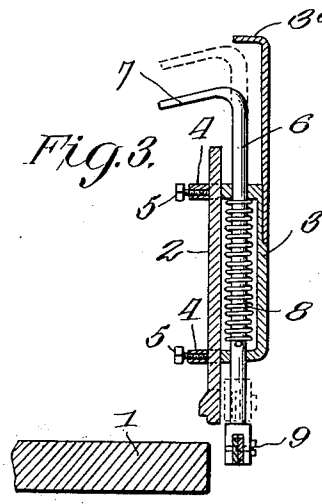

Fig. 5.

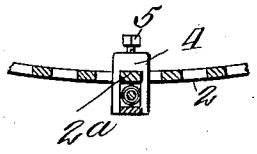

Fig. 6.

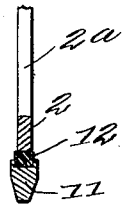

Fig. 4.

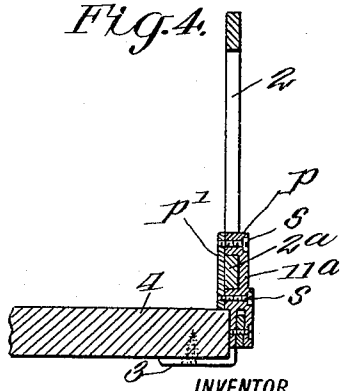

WITNESSES

S. E. Wade.

L. A. Stanley

INVENTOR

LOUIS E. ZIMMERMAN.

BY Munn & Co.

ATTORNEYS

COLUMBIA PLANOGRAPH CO., WASHINGTON, D. C.

UNITED STATES PATENT OFFICE.

LOUIS E. ZIMMERMAN, OF PEKIN, ILLINOIS.

PAPER-HOLDER FOR SCALES.

1,006,892. Specification of Letters Patent. Patented Oct. 24, 1911.

Application filed June 3, 1911. Serial No. 631,082.

To all whom it may concern:

Be it known that I, LOUIS E. ZIMMERMAN, a citizen of the United States, and a resident of Pekin, in the county of Tazewell and State of Illinois, have made certain new and useful Improvements in Paper-Holders for Scales, of which the following is a specification.

My invention relates to improvements in devices for holding paper on the platform of scales, especially that form known as computing scales, and it consists in the combinations, constructions and arrangements herein described and claimed.

An object of my invention is to provide an attachment for holding a paper covering upon the scale plate, thereby keeping the plate clean and in a sanitary condition.

A further object of my invention is to provide an attachment for the scale which will hold the paper firmly in position and yet which is out of the way of the article so that the latter can be placed on the plate in the usual manner.

A further object of my invention is to provide a device which may be attached to the back of the scale and which is provided with a pair of spring jaws for holding the corners of the wrapping paper securely.

A further object of my invention is to provide a simple device which can be readily attached to the scales in common use for the purposes above mentioned.

Other objects and advantages will appear in the following specification, and the novel features of the device will be particularly pointed out in the appended claims.

My invention is illustrated in the accompanying drawings forming part of this application in which—

Figure 1 is a front view of a portion of a scale with my invention applied thereto, Fig. 2 is a plan view, Fig. 3 is an enlarged section along the line 3—3 of Fig. 1, Fig. 4 is an enlarged section along the line 4—4 of Fig. 1, Fig. 5 is a section along the line 5—5 of Fig. 1, and Fig. 6 is a section along the line 6—6 of Fig. 1.

Referring now to the drawings 1 denotes the scale pan of a set of scales of the "Dayton" type of computing scale. In the rear of this scale pan is secured a fender or guard 2 of an arc shape to conform to the curvature of the pan or plate 1. This fender is secured by means of the flanges 3 to the body portion 4 of the scale as shown in Fig. 4. The foregoing parts are common and form no part of my invention except in so far as they coöperate with the attachment about to be described.

Secured to the fender 2 is an upright 3 having a laterally bent thumb rest 3^a at its top. The means for securing this member 3 is shown best in Fig. 3. It consists of a pair of lugs 4 like that shown in Fig. 5, each adapted to straddle one of the bars 2^a of the fender 2 and having a set screw 5 for clamping the lug to the fender. The lugs 4 have alined perforations through which extends a bar 6 having a laterally bent upper end 7 which constitutes a finger hold. The bar or rod 6 is normally pressed downwardly by means of a spring 8. The lower end of the bar or rod 6 is pivotally attached at 9 to the ends of two curved levers 10 and 11 respectively. These levers are fulcrumed in their respective brackets 10^a and 11^a, and the outer end of each lever is turned inwardly and is provided with a resilient portion 12 which is adapted to engage the under side of the fender 2. The brackets 10^a and 11^a are secured to the fender in the manner shown in Fig. 4, the said brackets consisting of an outer plate p and an inner plate p' screwed together by means of the screws in such a manner as to clamp the lower frame bar 2^a of the fender 2.

From the foregoing description of the various parts of the device, the operation thereof may be readily understood.

When it is desired to weigh an article the thumb is placed on the thumb piece 3^a and the index finger underneath the finger hold 7. The latter is pulled upwardly into the dotted line position shown in Fig. 3, the outer ends of the levers 10 and 11 swinging downwardly so as to permit the sheet of paper 13 to be inserted between the resilient portions 12. The hand is then released from the device and the levers spring into place thereby clamping the paper securely at its ends between the members 12 and the underside of the fender 2. Articles may now be placed on the paper and weighed and the paper will keep the scale plate clean and sanitary. When the paper becomes soiled, it may be unclamped from the holding device and a new paper put in its place.

I claim:

1. The combination with the fender of a scale, of a spring pressed rod secured thereto, a pair of levers pivotally connected with

said rod, the outer ends of the levers being normally pressed against the bottom of said fender, the upper end of said rod being bent laterally to form a finger hold, and a stationary finger hold.

2. The combination with the curved fender of a scale, of a slidable spring pressed rod secured to the fender at the central portion thereof, and a pair of levers pivotally secured to the lower end of said rod, said levers being curved and the ends of said levers being normally pressed against the under side of said fender.

3. The combination with the curved fender of a scale, of a slidable spring pressed rod carried by the fender at the central portion thereof, said rod being provided at its end with a laterally bent portion serving as a finger hold, a stationary thumb rest disposed above the upper end of said finger hold, and a pair of levers pivotally secured to the lower end of said rod, said levers being curved and the ends of said levers being normally pressed against the under side of said fender.

LOUIS E. ZIMMERMAN.

Witnesses:
JOHN E. FREY, JR.,
BERT J. CORDIN.

Copies of this patent may be obtained for five cents each, by addressing the "Commissioner of Patents, Washington, D. C."