(12) INTERNATIONAL APPLICATION PUBLISHED UNDER THE PATENT COOPERATION TREATY (PCT)

(19) World Intellectual Property Organization
International Bureau

(43) International Publication Date
4 July 2013 (04.07.2013)

WIPO | PCT

(10) International Publication Number
WO 2013/098788 A1

(51) International Patent Classification:
H03K 17/00 (2006.01)

(21) International Application Number:
PCT/IB2012/057788

(22) International Filing Date:
28 December 2012 (28. 12.2012)

(25) Filing Language: Italian

(26) Publication Language: English

(30) Priority Data:
VI201 1A000342 29 December 201 1 (29. 12.201 1) IT

(71) Applicant: **PIZZATO ELETTRICA S.R.L.** [IT/IT]; Via Torino, 1, 1-MAROSTICA (VI) 36063 (IT).

(72) Inventor: **PIZZATO, Giuseppe;** Via IV Martiri, 3/2, I-36063 Marostica (IT).

(74) Agent: **MAROSCIA, Antonio;** Maroscia & Associati S.r.L, Contra Porti, 21, 1-36100 Vicenza (VI) (IT).

(81) Designated States *(unless otherwise indicated, for every kind of national protection available):* AE, AG, AL, AM, AO, AT, AU, AZ, BA, BB, BG, BH, BN, BR, BW, BY, BZ, CA, CH, CL, CN, CO, CR, CU, CZ, DE, DK, DM, DO, DZ, EC, EE, EG, ES, FI, GB, GD, GE, GH, GM, GT, HN, HR, HU, ID, IL, IN, IS, JP, KE, KG, KM, KN, KP, KR, KZ, LA, LC, LK, LR, LS, LT, LU, LY, MA, MD, ME, MG, MK, MN, MW, MX, MY, MZ, NA, NG, NI, NO, NZ, OM, PA, PE, PG, PH, PL, PT, QA, RO, RS, RU, RW, SC, SD, SE, SG, SK, SL, SM, ST, SV, SY, TH, TJ, TM, TN, TR, TT, TZ, UA, UG, US, UZ, VC, VN, ZA, ZM, ZW.

(84) Designated States *(unless otherwise indicated, for every kind of regional protection available):* ARIPO (BW, GH, GM, KE, LR, LS, MW, MZ, NA, RW, SD, SL, SZ, TZ, UG, ZM, ZW), Eurasian (AM, AZ, BY, KG, KZ, RU, TJ, TM), European (AL, AT, BE, BG, CH, CY, CZ, DE, DK, EE, ES, FI, FR, GB, GR, HR, HU, IE, IS, IT, LT, LU, LV, MC, MK, MT, NL, NO, PL, PT, RO, RS, SE, SI, SK, SM, TR), OAPI (BF, BJ, CF, CG, CI, CM, GA, GN, GQ, GW, ML, MR, NE, SN, TD, TG).

Published:

— *with international search report (Art. 21(3))*

(54) Title: ELECTRONIC SAFETY DEVICE FOR A PROTECTION BARRIER

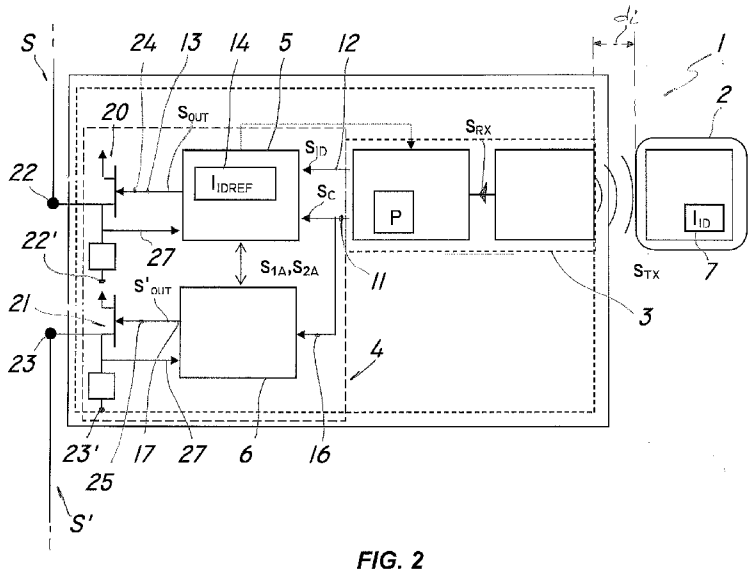

FIG. 2

(57) Abstract: An electronic safety device for a protection barrier comprising a transponder (2) having an identification code (lm), a transceiver device (3) for receiving a return signal (S_{EX}) from the transponder (2), the transponder (2) being movable with respect to the transceiver (3) and adapted to be placed at an current distance (di), an electric circuit (S, S') which is switched when the distance (di) is lower or higher than a reference distance (d_r) and control and switching means (4) having a master electronic circuit (5) connected to the transceiver (3) to process the return signal (SEX) and generate a first output signal (SOUT) for switching the electronic circuit (S, S'). The transceiver device (3) is adapted to process the return signal (S_{EX}) to generate a control signal (Sc) with an electric parameter (P) variable in function of the distance (di), the control signal (Sc) is a periodic signal with a frequency (fc) and has a first spectrum with a middle interval **(Fi)** centered on the frequency (fc) when the current distance (di) is lower or equal to the reference distance (d_r), and a second spectrum with lateral intervals (F_2, F_3) shifted with respect the middle interval **(Fi)** when the distance (di) is higher than the reference distance (d_r), the parameter (P) is associated to a frequency value that comprises either into the middle interval **(Fi)** or into one of the lateral intervals **(F2,** F_3).

WO 2013/098788 A1

ELECTRONIC SAFETY DEVICE FOR A PROTECTION BARRIER

Field of the invention

The present invention generally finds application in the field of electric safety devices and particularly relates to an electronic safety device for a protection barrier.

Background art

A number of electronic safety devices are known, which are adapted for use with protection barriers for industrial plants, and are designed to open an electric circuit in case of emergency or hazard for a user.

Particularly, such known devices comprise a first portion associated with a stationary part of the barrier and a second portion associated with a moving part of the barrier, e.g. a protection member, a door or the like, to monitor the opening and closing states thereof and stop the operation of the plant if the barrier is open.

Namely, the device comprises one or more switches, which are designed to change their own electrical state from closed to open or vice versa, in function of the distance between the stationary portion and the moving portion.

For instance, the switch may be electrically closed only if the two parts are at very little or no distance from each other.

A particularly common type of such safety devices uses a RFID transponder associated with the moving portion and is adapted to communicate with a transceiver device anchored to the stationary part and having a reading head which is adapted to receive an identification signal sent by the transponder and compare it with a code stored therein.

Thus, when both codes match, the device closes the circuit thereby allowing operation of the plant.

This configuration prevents any accidental or fraudulent actuation, because communication between the transceiver device and a well-defined transponder is needed for the circuit to be closed.

Nevertheless, these solutions also have drawbacks, as any interference might cause reading errors and resulting failures.

For overcome such drawbacks, forms of such safety devices have been developed, with control circuits designed to prevent any malfunctioning.

For instance, EP0968567 discloses an electronic safety device of the type as described hereinbefore, in which the microprocessor control circuits designed to check whether the identification code transmitted by the transponder matches the code stored in the reading head are provided in duplicate.

Particularly, each control circuit is designed to individually check the received signal and compare the received identification code with the stored code.

The actuation signal will be only generated if the received identification code matches the stored code for both control circuits.

While this device provides a higher safety degree, due to the redundancy of the control circuits, it still suffers from certain drawbacks, one of which is the apparent circuit complexity required by the duplication of all the control elements.

Furthermore, the distance between the transponder and the reading head is assessed by detecting the amplitude of the received return signal, which may easily change due to spurious interferences in the area around the device.

Furthermore, the control circuit directly operates on the waveform of the received signal, and this might introduce distortions that might significantly change the amplitude value, particularly in case of malfunctioning.

A further drawback of this solution is that the received signal is poorly immune to background noise and such signal can be only properly detected by providing the control circuit with highly effective and relatively expensive filters, which must be further centered in a particularly accurate manner around the signal transmission frequency, with poor adaptability of the filtering features to the various types of commercially available transponders.

Furthermore, the provision of a device for monitoring the amplitude of the received signals and the checking elements further reduces the

possibility of using various types of RFID transponders, with different transmission frequencies.

Finally, the device for monitoring the level of the received signal is connected downstream from the antenna of the reading head and may be affected by the temperature of the outside environment in which the electronic safety device is installed.

Disclosure of the invention

The object of the present invention is to overcome the above drawbacks, by providing an electronic safety device for protection barriers that is highly efficient and relatively cost-effective.

A particular object is to provide an electronic safety device for protection barriers that is difficult to tamper and ensures a high safety degree.

A further object of the present invention is to provide an electronic safety device for protection barriers that can assess the distance between the moving part and the stationary part in a particularly accurate manner.

Another object of the present invention is to provide an electronic safety device for protection barriers that is highly immune to noise and spurious interferences in the environment.

A further object of the present invention is to provide an electronic safety device for protection barriers that uses a smaller number of components and requires relatively low manufacturing costs.

Yet another object of the present invention is to provide an electronic safety device for protection barriers that ensures high versatility and can use various types of RFID transponders.

These and other objects, as better explained hereafter, are fulfilled by an electronic safety device as defined in claim 1.

Advantageous embodiments of the invention are obtained in accordance with the dependent claims.

Brief description of the drawings

Further features and advantages of the invention will be more apparent upon reading of the detailed description of a preferred, non-

exclusive embodiment of an electronic safety device for a protection barrier according to the invention, which is described as a non-limiting example with the help of the annexed drawings, in which:

FIG. 1 is a perspective view of a first embodiment of a safety device of the invention;

FIG. 2 is a simplified block diagram of the switch of Fig. 1;

FIG. 3 is a view of a first detail of the diagram of Fig. 1, including the time charts of two signals;

FIG. 4 is a first representation of the frequency spectrum of a signal of Fig. 3;

FIG. 5 is a second representation of the frequency spectrum of a signal of Fig. 3;

FIG. 6 is view of a second detail of the diagram of Fig. 2;

FIG. 7 is a flow chart of a third detail of Fig. 5;

FIG. 8 is a flow chart of a fourth detail of Fig. 5.

Detailed description of a preferred embodiment

Referring to the above figures, an electronic safety device for a protection barrier, generally designated by numeral 1, may be mounted to a protection barrier or a working area, not shown and known per se, having one or more safety electric circuits S, S'.

Particularly, the barrier may include a fixed working area delimiting frame and a movable part, which is adapted to allow controlled access of an operator therein.

The device 1 may be electrically connected to one or more warning, emergency or alarm safety circuits S, S' to trigger the latter at the same time as the moving part of the protection member is opened or closed, thereby ensuring the requested safety.

An electronic safety device 1 for a protection barrier of the invention comprises a transponder 2 that is designed to be anchored to the movable part of the barrier in which an identification code I_{ID} is stored.

Furthermore, the device comprises a transceiver device 3 designed to be anchored to the fixed part of the barrier and is adapted to transmit a radio

frequency excitation signal STX to the transponder 2 and to receive therefrom a return signal S_{RX} associated with the identification code I_{ID}.

Furthermore, control and switching means 4 are provided, which are connected to the transceiver device 3 and have a master electronic circuit 5 connected to the transceiver device 3 and adapted to retrieve and process the identification code I_{ID} extracted from the signal S_{RX} and to generate a first output signal SOUT for switching at least one electric circuit S, S' associated with the barrier.

According to a peculiar feature of the invention, the transceiver device 3 is adapted to process the return signal SRX to generate a control signal Sc having at least one electric parameter P that changes with the current distance d_i thereof from the transponder 2.

The transceiver device 3 may be designed to generate a control signal Sc whose electric parameters are different from those of the return signal S_{RX}. Such parameters may be a function of the instantaneous values of the electric parameters of the return signal S_{RX} transmitted by the transponder 2.

Conveniently, the control and switching means 4 may include a slave electronic circuit 6 which is adapted to receive the control signal Sc and vary the first output signal SOUT as a function of it.

Thus, the first output signal SOUT may actuate the control and switching means 4 to open or close the safety electric circuit S, S', when the control signal Sc has an electric parameter P associated with a distance d_i between the transceiver device 3 and the transponder 2 that is lower or higher than a predetermined reference distance d_r.

In an exemplary, non-limiting configuration of the invention, as shown in the figures, the device 1 may be designed to close two safety electric circuits S, S' when the distance d_i between the transceiver device 3 and the transponder 2 is lower or equal to the reference distance d_r.

Conversely, when such distance d_i is higher than the reference distance d_r, the device 1 may open the safety electric circuits S, S', thereby warning that the moving part of the protection member has been opened.

Conveniently, the transponder 2 may include an electronic tag 7

containing the identification code and adapted to be self-powered with the excitation signal S_Tx transmitted by the transceiver device 3.

Particularly, the excitation signal may be of the radio-frequency type, having a substantially constant frequency, corresponding to the operation frequency of the electronic tag 7.

For instance, the transceiver device 3 may generate a substantially periodic excitation signal whose frequency is substantially 125 kHz, allowing self-powering of a variety of commercially available transponders 2.

The transceiver device 3 may comprise an antenna 8, for transmitting the excitation signal STX and receiving the return signal SRX.

Furthermore, the return signal may have the same frequency as the excitation signal or a different frequency.

Conveniently, the control signal generated by the transceiver device 3 may be of periodic type, with a repetition frequency fc that is substantially constant with time.

As better shown in FIG. 3, the control signal S_c may be substantially of the square wave type with a repetition frequency fc of 2 kHz.

In a particularly advantageous aspect of the invention, such control signal may be used as a synchronism signal for the master electronic circuit 5 located downstream from the transceiver device 3.

The transceiver device 3 may be designed to use the return signal SRX to generate an identification signal SID containing the identification code I_{ID} of the transponder 2.

Thus, the transceiver device 3 may provide the master electronic circuit 5 with identification signal SID and the control signal Sc, both shown in Fig. 3.

The latter may be used both to determine the instantaneous distance di between the transceiver device 3 and the transponder 2 and to synchronize reception and processing of the identification signal SID.

Conveniently, the slave electronic circuit 6 may be adapted to determine the electronic parameter P by frequency analysis of the periodic control signal S_c.

Indeed, any change of the distance between the transceiver device 3 and the transponder 2 may cause an instantaneous change of the ratio r of the duration of the high level portion 9 of the control signal to the duration of the low level portion 10 thereof, and such ratio r may change within one or more repetition periods T_c.

The instantaneous change of the ratio r may cause a change in the frequency spectrum of the control signal S_c with respect to the spectrum of a common square wave periodic signal.

If the transceiver device 3 is at a distance d_i from the transponder 2 that is lower than the reference distance d_r, the control signal Sc will have a first frequency spectrum, e.g. as shown in Fig. 4, whose distribution is substantially comparable to a Gaussian curve having a main power peak centered at the repetition frequency fc.

Conversely, if the transceiver device 3 is at a distance d_i from the transponder 2 that is higher than the reference distance d_r, the control signal Sc will have a second frequency spectrum, e.g. as shown in Fig. 5, whose energy distribution has a secondary peak centered at the repetition frequency fc and two substantially symmetrical main peaks whose frequencies are shifted from the repetition frequency f_c.

In the former case, a first middle frequency interval F_1 may be defined, which is centered at the repetition frequency fc, corresponding to the highest energy of the main peak.

However, in the second case, two lateral frequency intervals F_2, F_3, which are shifted relative to the first interval F_1, each corresponding to the highest energy of the corresponding symmetrical peak.

Thus, the slave electronic circuit 6 may be designed to associate the electric parameter P with a quantity proportional to the frequency that corresponds to the highest energy peak as detected by analysis of the frequency spectrum of the control signal Sc.

If the distance between the transceiver device 3 and the transponder 2 is lower or equal to the reference distance, the electric parameter P will be associated with a frequency value comprised into the middle interval F_1,

whereas if such distance d_i is higher than the reference distance d_r, the electric parameter P will be associated with a frequency value comprised into one of the lateral intervals F_2, F_3.

Nevertheless, it should be noted that while the control signal has a ratio r that changes with distance, it may still remain of the periodic type, with a repetition frequency f_c subjected to minor changes around a predetermined average value.

Conveniently, the master electronic circuit 5, as shown in Fig. 6, comprises at least one first 11 and one second 12 inputs, which are connected to the transceiver device 3 to receive the control signal Sc and the identification signal $S|_D$ respectively, and at least one first output 13 for the first output signal SOUT-

Furthermore, the master electronic circuit 5 may comprise a memory section 14 for storing at least one reference code IDREF of one or more transponders 2 for identification by the switch 1.

Conveniently, the master processing unit 5 may include a first microprocessor processing unit 15 adapted to draw the stored reference code IDREF from the memory section 14 and comparing it with the identification code at the second input 12.

The first microprocessor 15 may be designed to detect the control signal Sc at the first input 11 of the master processing unit to use it as a synchronism signal.

In this case, using the synchronization provided by the control signal Sc, the first processor 15 may detect the match between the identification code I_{ID} associated with the identification signal SID at the second input 12 and one of the stored reference codes IDREF-

Conveniently, the first processor 15 may send a first activation signal **S-iA** to the slave electronic circuit 6 in response to the comparison performed by the processor between the identification code I_{ID}, associated with the identification signal SID, and one or more stored reference codes IDREF-

Suitably, the slave electronic circuit 6 may comprise at least one third input 16 connected to the transceiver device 3 to receive the control signal

Sc therefrom and at least one second output 17 for a second output signal S_{OUT}'.

Furthermore, the slave electronic circuit 6 may comprise a second processor 18 having a programmable section 19 adapted to define digital filtering means for analyzing the frequency spectrum of the control signal Sc and generating the electric parameter P.

The digital filtering means may be designed to detect the frequency corresponding to the energy peak of the spectrum by associating it with the electric parameter P of the control signal Sc.

Conveniently, the digital filtering means may be centered at the repetition frequency f_c of the control signal S_C and may have a fixed or variable bandwidth W, as better shown in Fig. 5.

The second microprocessor 18 may generate a second activation signal S_2A in response to the value associated with the electric parameter P of the control signal S_C and may send such second activation signal S_2A to the master electronic circuit 5.

Advantageously, the master electronic circuit 5 and the slave electronic circuit 6 are adapted to generate corresponding first SOUT and second S'_{OUT} output signals as a function of the second S_{2A}.

Indeed, the master electronic circuit 5 may be designed to generate a corresponding first output signal SOUT according to both the processing performed by the first processor 15 and the second activation signal S_{2A}.

On the other hand, the slave electronic circuit 6 may be designed to generate a corresponding second output signal S'_{OUT} according to both the processing performed by the second processor 18 and the first activation signal S-IA.

Conveniently, the switching means 4 may include at least one first 20 and one second 21 semiconductor switches, and each may have output terminals 22, 22'; 23, 23' adapted to be connected to one or more safety electric circuits S, S' and an input terminal 24, 25 connected to the corresponding first 13 and second 17 outputs of the master 5 and slave 6 electronic circuits, to receive the first SOUT and second S'_{OUT} output signals

therefrom.

As better shown in Fig. 6, the first 20 and second 21 semiconductor switches may consist of a pair of power transistors, e.g. of the IGBT type or the like, whose input is controlled by the first SOUT or the second S'OUT output signal generated by the corresponding master 5 or slave 6 electronic circuits.

In the illustrated configuration, each master 5 or slave 6 electronic circuit may be connected to at least one individual transistor 20, 21 and may be designed to send corresponding first SOUT and second output signals S'OUT to the input 24, 25 thereof, which output signals are synchronized and independently generated to increase safety in switching of the safety circuits S and S'.

Conveniently, each master 5 and slave 6 electronic circuit may include a respective feedback circuit 26, 27 associated with the corresponding semiconductor switch element 20, 21 and adapted to control operation thereof.

The first 15 and second 18 processors may be designed to generate corresponding first SOUT and second output signals S'OUT for stably opening and closing the transistor when the corresponding feedback circuit indicates an anomaly therein.

In a further aspect, the invention relates to a processing method for the master electronic circuit 5, as shown in Fig. 7, which comprises a first step of a) retrieving a reference code IDREF stored in the memory portion 14 and a step of b) comparing such reference code I_{D}REF with the identification code I_{ID} associated with the identification signal $S|_{D}$ at the second input 12.

A step is further provided of c) generating and sending the first activation signal S-IA to the slave electronic circuit 6, which signal is generated in response to the result of the comparison performed during the step b).

If the comparison step b) has a negative result, the master electronic circuit 5 will get ready to carry out a later step of a) retrieving a reference code IDREF and will indicate this state to the slave electronic circuit 6 with an appropriate activation signal S_{1A} generated and sent during the step c).

Conversely, if the comparison step b) has a positive result, then the master electronic circuit 5 will indicate this condition to the slave electronic circuit 6 with a first activation signal $S\text{-}I_A$ and will carry out a step d) of retrieving the second activation signal S_2A transmitted by the slave electronic circuit 6 in response to reception of the first activation signal S-IA.

If the step d) detects a positive second activation signal S_2A, indicating that the distance between the transceiver device 3 and the transponder 2 is lower or equal to the reference distance, then the master electronic circuit 5 will carry out a step of e) generating and sending the first output signal SOUT to the control and switch means 4.

Conversely, if the step d) detects a negative second activation signal S_2A, indicating that the distance d_i between the transceiver device 3 and the transponder 2 is higher than to the reference distance d_r, the master electronic circuit 5 will get ready to carry out a later step of a) retrieving a reference code $I_{D\,REF}$.

Likewise, as better shown in Fig. 8, a processing method may be described, which is associated with the slave electronic circuit 6.

Such method comprises a step f) of determining the variable electric parameter P associated with the frequency that corresponds to the main energy peak of the frequency peak of the control signal S_c.

Conveniently, there will be a step g) of comparing such electric parameter P with a value corresponding to the reference distance d_r, followed by a step h) of generating and sending the second activation signal S_2A to the master electronic circuit 5, as a function of the value assumed by the parameter P.

If the electric parameter P is associated with a distance d_i between the transceiver device 3 and the transponder 2 that is lower than or equal to the reference distance d_r, then there will be a step i) of detecting the first activation signal S-IA transmitted by the master electronic circuit 5, and if the such signal is a positive signal, there will be a step l) of generating and sending the second output signal S'OUT to the control and switch means 4.

Otherwise, if the step i) detects a negative first activation signal S_{1A},

then the slave electronic circuit will get ready to perform a new step f) of determining the electric parameter P.

The above disclosure clearly shows that the invention fulfills the intended objects and particularly the object of providing an electronic safety device for a protection barrier that ensures high safety and has a compact size, and that can be used in a variety of different safety electronic circuits.

The device of the invention is susceptible to a number of changes and variants, within the inventive concept disclosed in the appended claims. All the details thereof may be replaced by other technically equivalent parts, and the materials may vary depending on different needs, without departure from the scope of the invention.

While the safety electronic device for a protection barrier has been described with particular reference to the accompanying figures, the numerals referred to in the disclosure and claims are only used for the sake of a better intelligibility of the invention and shall not be intended to limit the claimed scope in any manner.

CLAIMS

1. An electronic safety device for a protection barrier, wherein the barrier comprises a fixed part and a movable part, which device comprises:

- a transponder (2) designed to be anchored to the movable part of the barrier and wherein an identification code ($I|_D$) is stored;

- a transceiver device (3) anchorable to the fixed part of the barrier and adapted to receive from said transponder (2) a return signal (S_{RX}) associated to said identification code ($I_I o$);

- said transponder (2) being movable with respect said transceiver device (3) and adapted to be positioned to an current distance (d,) with respect the same;

- at least one electric circuit (S, S') associated to the barrier and adapted to be switched when said current distance (d,) is lower or higher to a predetermined reference distance (d_r);

- control and switching means (4) having a master electronic circuit (5) connected to said transceiver device (3) for processing said return signal (SR_X) and generating a first output signal (SOUT) in response to said identification code ($I|_D$) for switching of said at least one electric circuit (S, S');

wherein said transceiver device (3) is adapted to process said return signal (S_{RX}) for generating a control signal (S_c) having an electric parameter (P) variable in function of the current distance (d,);

characterized in that said control signal (S_c) is a periodic signal with predetermined repetition frequency (f_c), having a first frequency spectrum with a middle interval (F-,) centered with respect said repetition frequency (f_c) when said current distance (d,) is lower o equal to said reference distance (d_r), and having respectively a second frequency spectrum with lateral intervals (F_2, F_3) shifted with respect said first middle interval (F-,) when said

current distance (d,) is higher than said reference distance (d_r), said electric parameter (P) being associated to a frequency value comprised either into said middle interval (F-,) or into one of lateral intervals (F_2, F_3) to promote the switching of said at least one electric circuit (S, S').

2. Device as claimed in claim 1, characterized in that said control and switching means (4) comprise a slave electronic circuit (6) connected to said master electronic circuit (5) and adapted to varying said first output signal (SOUT) in function of said control signal (Sc).

3. Device as claimed in claim 1 or 2, characterized in that said control signal (Sc) has a substantially constant repetition frequency (f_c).

4. Device as claimed in claim 2, characterized in that said slave electronic circuit (6) comprises a programmable area (19) adapted to define numerical filtering means for analyzing the frequency spectrum of said control signal (Sc) and generating said at least one variable electric parameter (P).

5. Device as claimed in claim 4, characterized in that said numerical filtering means have a fixed or variable bandwidth (W) substantially centered with respect of said repetition frequency (f_c) of said control signal (Sc).

6. Device as claimed in any preceding claim, characterized in that said transceiver device (3) is adapted to process said return signal (S_{RX}) for generating an identification signal (SID) comprising said identification code (IID) of said transponder (2).

7. Device as claimed in claim 6, characterized in that said master electronic circuit (5) has at least one first (11) and one second input (12) connected to said transceiver device (3) to receive respectively said control signal (Sc) and said identification signal (SID) and at least one first output (13) for said first output signal (SOUT).

8. Device as claimed in any claim 2 to 7, characterized in that said slave electronic circuit (6) comprises at least one third input (16) connected to said transceiver device (3) to receive said control signal (Sc) and at least one second output (17) for a second output signal (S'OUT)-

9. Device as claimed in any preceding claim, characterized in that said master electronic circuit (5) comprises a memory area (14) for memorizing at least one reference code (IDREF) and a first microprocessor processing unit (15) adapted to compare said identification code (I_{ID}) with said at least one reference code (IDREF) and to detect said control signal (Sc) for generating a first activation signal ($S\text{-}I_A$) to be sent to said slave electronic circuit (6).

10. Device as claimed in any claim 4 to 9, characterized in that said slave electronic circuit (6) is adapted to generate a second activation signal (S_2A) in function of said at least one electric parameter (P) and to send it to said master electronic circuit (5).

11. Device as claimed in claim 10, characterized in that said master electronic circuit (5) is adapted to generate said first output signal (SOUT) in function of said second activation signal (S_2A) and said slave electronic circuit (6) is adapted to generate said second output signal (S'OUT) in function of said first activation signal ($S\text{-}I_A$).

12. Device as claimed in any claim 8 to 10, characterized in that said control and switching means (4) comprise a first (20) and a second semiconductor switch (21) connected respectively to said first (13) and said second output (17) of said electronic circuits (5, 6) for receiving respectively said first (SOUT) and said second output signal (S'OUT), said switches (20, 21) being connectable to one or more electric circuits (S, S') for switching thereof.

13. Device as claimed in claim 12, characterized in that said electronic circuits (5, 6) comprise respective feedback circuits (26, 27) associated to the corresponding semiconductor switch (20, 21) to control the operation thereof.

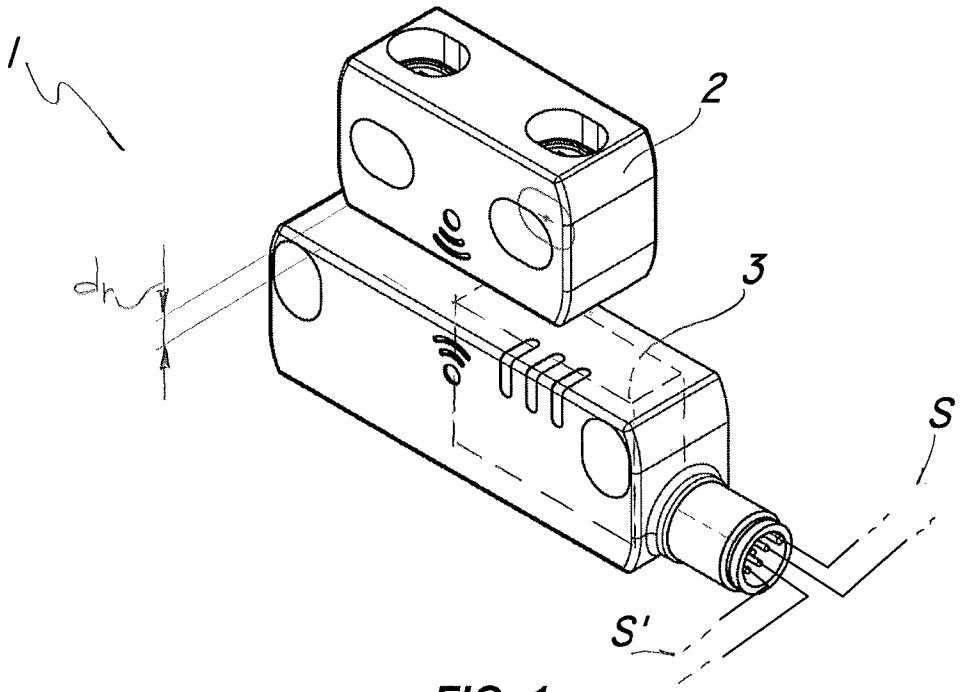
1
2
3
dh
S
S'

FIG. 1

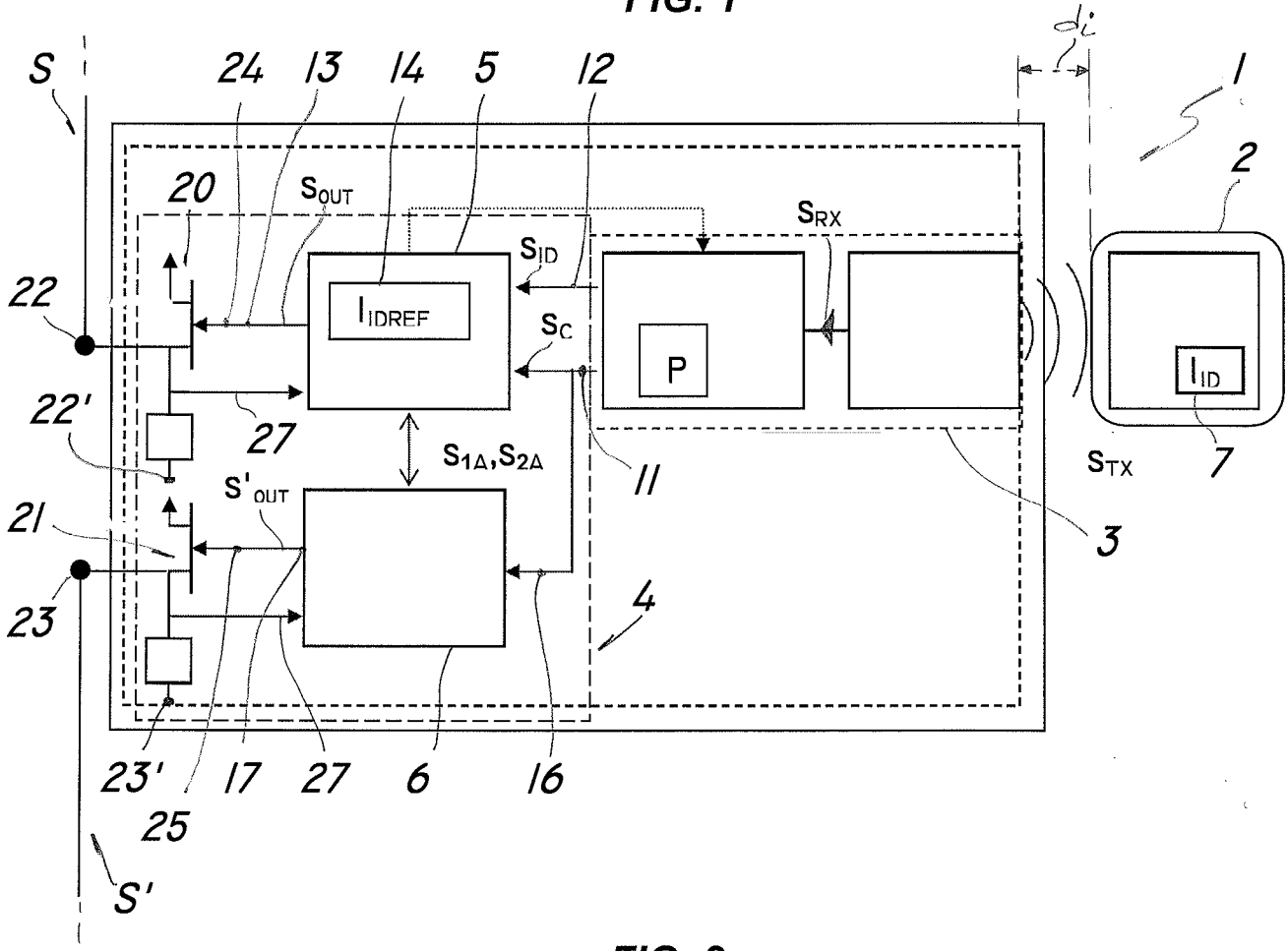
S
24
13
14
5
12
di
1
2
20
SOUT
SRX
SID
22
IIDREF
SC
P
IID
22'
27
S1A,S2A
11
STX
7
S'OUT
21
3
23
4
23'
17
27
6
16
25
S'

FIG. 2

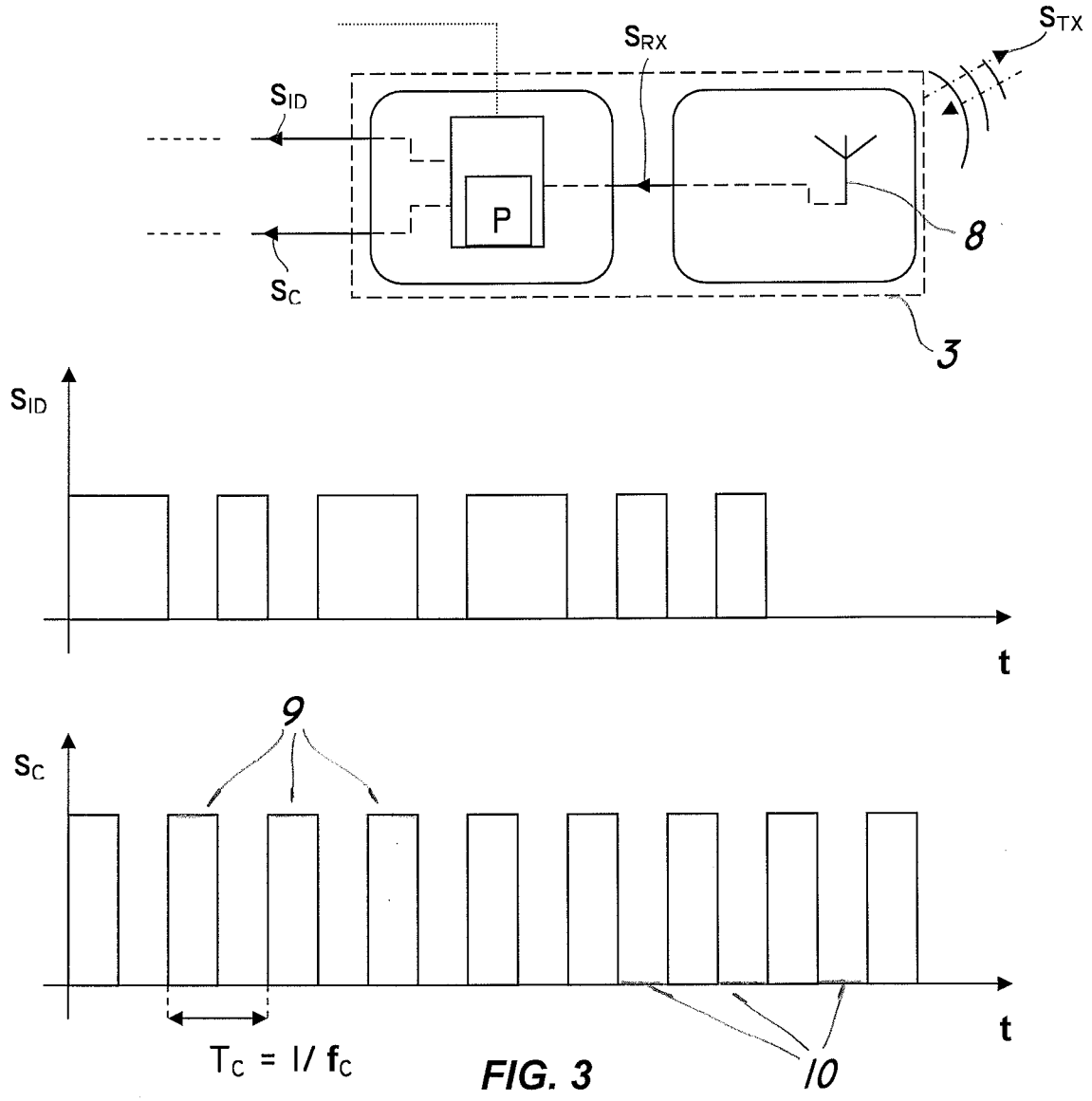

FIG. 3

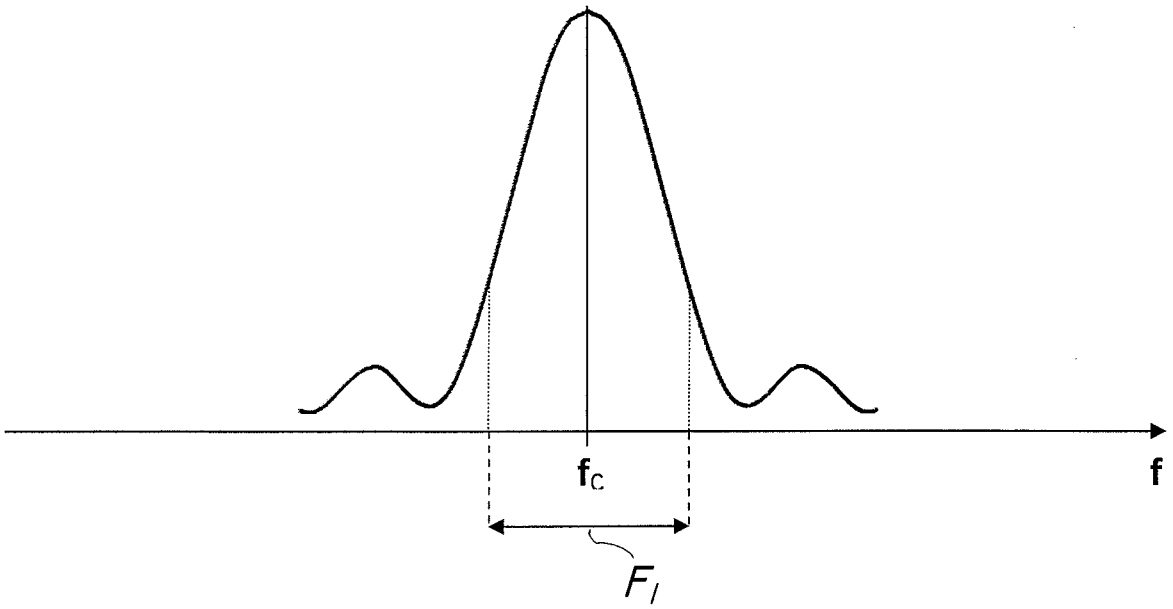

FIG. 4

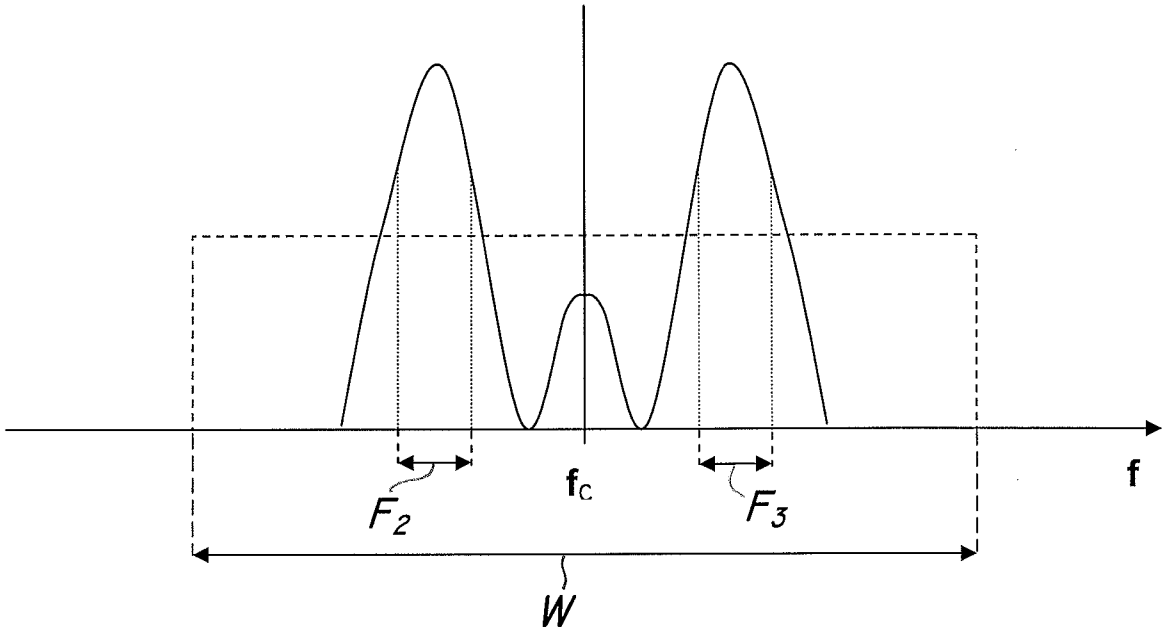
f
f_C
F_2
F_3
W

FIG. 5

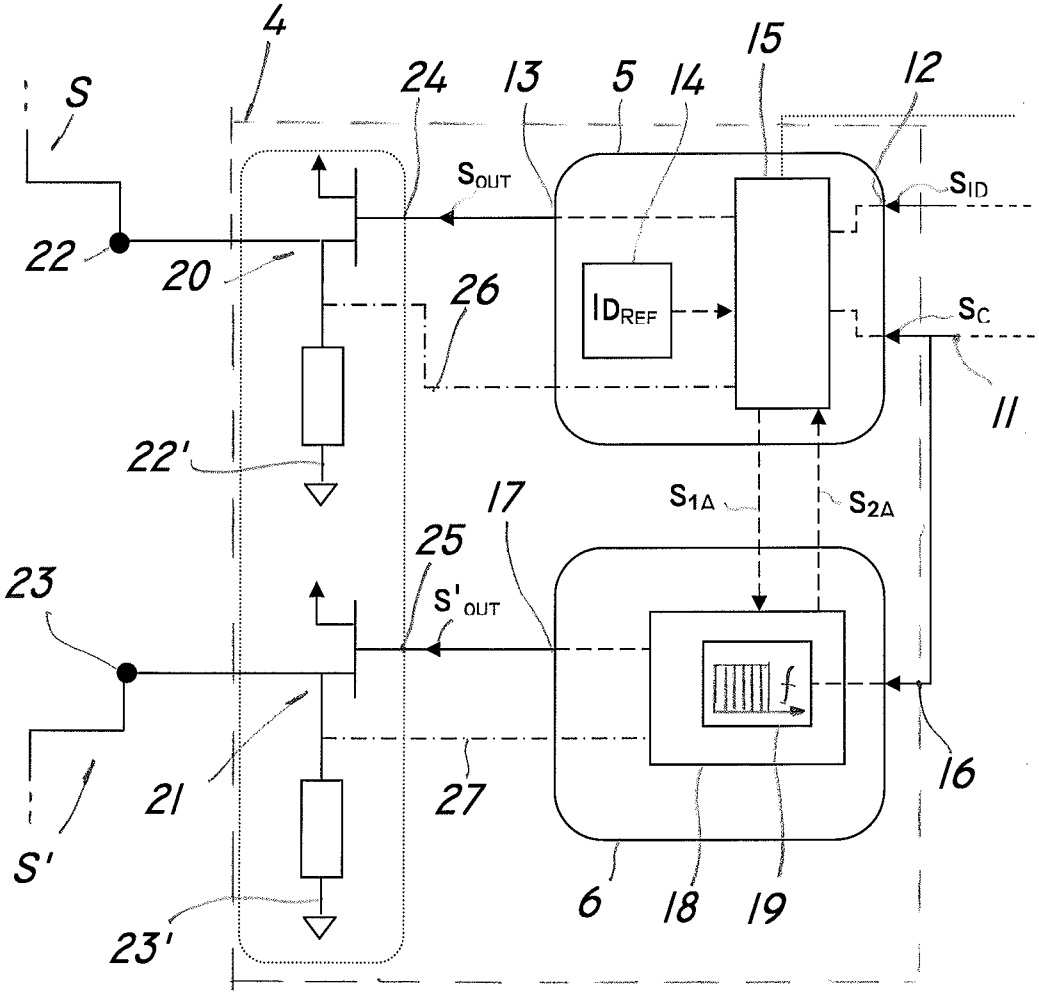
4
S
24
13
5
14
15
12
S_{OUT}
S_{ID}
22
20
26
ID_{REF}
S_C
11
22'
17
S_{1A}
S_{2A}
25
23
S'_{OUT}
21
27
16
S'
6
18
19
23'

FIG. 6

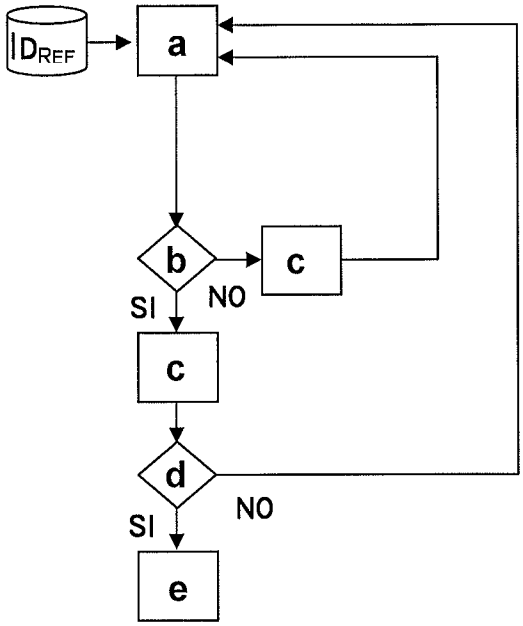

FIG. 7

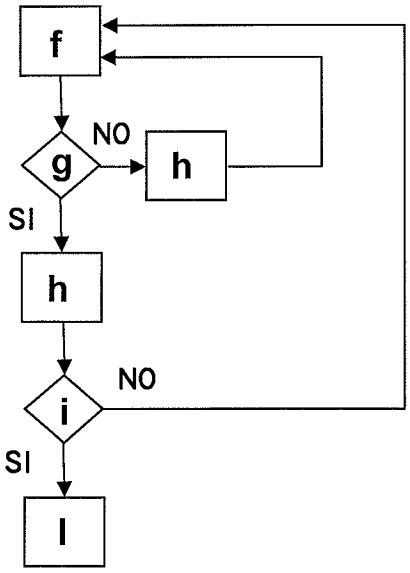

FIG. 8

INTERNATIONAL SEARCH REPORT

International application No
PCT/IB2012/057788

A. CLASSIFICATION OF SUBJECT MATTER
INV. HO3K17/00
ADD.

According to International Patent Classification (IPC) or to both national classification and IPC

B. FIELDS SEARCHED

Minimum documentation searched (classification system followed by classification symbols)
H03K

Documentation searched other than minimum documentation to the extent that such documents are included in the fields searched

Electronic data base consulted during the international search (name of data base and, where practicable, search terms used)
EPO-Internal

C. DOCUMENTS CONSIDERED TO BE RELEVANT

Category*	Citation of document, with indication, where appropriate, of the relevant passages	Relevant to claim No.
A	US 5 589 821 A (SALLEN ROY [US] ET AL) 31 December 1996 (1996-12-31) abstract figures 1-2 column 3, line 43 - column 4, line 41	1-13
A	US 5 467 082 A (SANDERSON GLENN A [US]) 14 November 1995 (1995-11-14) abstract figure 1 the whole document	1-13
A	US 2006/220846 Al (STRATMANN CHRISTOPH [DE]) 5 October 2006 (2006-10-05) figure 1 abstract the whole document	1-13

☐ Further documents are listed in the continuation of Box C.

☒ See patent family annex.

* Special categories of cited documents :

"A" document defining the general state of the art which is not considered to be of particular relevance

"E" earlier application or patent but published on or after the international filing date

"L" document which may throw doubts on priority claim(s) orwhich is cited to establish the publication date of another citation or other special reason (as specified)

"O" document referring to an oral disclosure, use, exhibition or other means

"P" document published prior to the international filing date but later than the priority date claimed

"T" later document published after the international filing date or priority date and not in conflict with the application but cited to understand the principle or theory underlying the invention

"X" document of particular relevance; the claimed invention cannot be considered novel or cannot be considered to involve an inventive step when the document is taken alone

"Y" document of particular relevance; the claimed invention cannot be considered to involve an inventive step when the document is combined with one or more other such documents, such combination being obvious to a person skilled in the art

"&" document member of the same patent family

Date of the actual completion of the international search	Date of mailing of the international search report
19 March 2013	28/03/2013

Name and mailing address of the ISA/	Authorized officer
European Patent Office, P.B. 5818 Patentlaan 2 NL - 2280 HV Rijswijk Tel. (+31-70) 340-2040, Fax: (+31-70) 340-3016	Operti , Antonio

INTERNATIONAL SEARCH REPORT

Information on patent family members

International application No
PCT/IB2012/057788

Patent document cited in search report	Publication date	Patent family member(s)	Publication date
US 5589821 A	31-12-1996	EP 0800653 A1	15-10-1997
		JP H10511455 A	04-11-1998
		US 5589821 A	31-12-1996
		US 5661460 A	26-08-1997
		WO 9618913 A1	20-06-1996
US 5467082 A	14- 11--1995	NONE	
US 2006220846 A1	05- 10--2006	DE 102005013102 A1	21--09--2006
		EP 1703640 A1	20--09--2006
		JP 4423268 B2	03--03--2010
		JP 2006262482 A	28--09--2006
		US 2006220846 A1	05--10--2006