J. A. McARDLE.

MINING APPARATUS.

APPLICATION FILED MAY 3, 1920.

1,410,939. Patented Mar. 28, 1922.

Fig. 1.

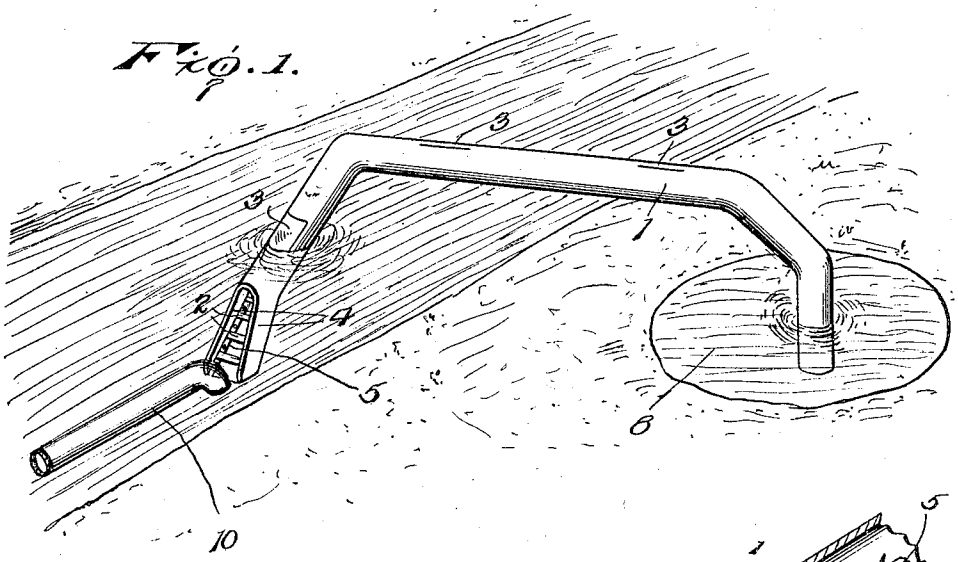

Fig. 2.

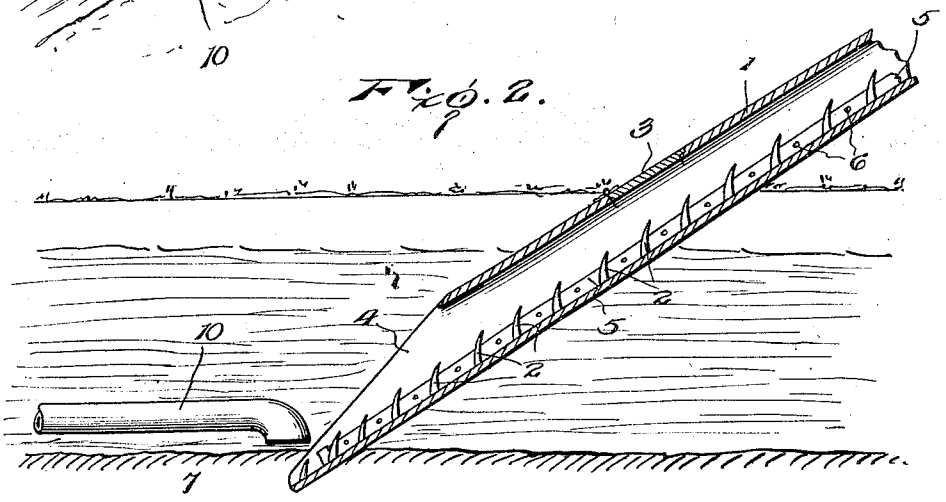

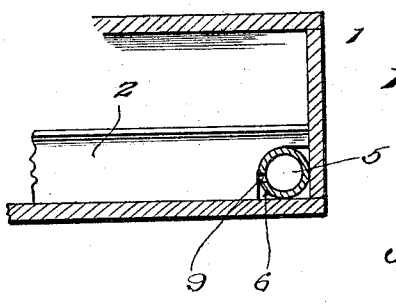

Fig. 3.

Inventor

J. A. McArdle.

By Fred P. Goin

Attorney

UNITED STATES PATENT OFFICE.

JAMES A. McARDLE, OF BREMERTON, WASHINGTON.

MINING APPARATUS.

1,410,939. Specification of Letters Patent. Patented Mar. 28, 1922.

Application filed May 3, 1920. Serial No. 378,649.

To all whom it may concern:

Be it known that I, JAMES A. McARDLE, a citizen of the United States, and residing at Bremerton, in the county of Kitsap and State of Washington, have invented certain new and useful Improvements in Mining Apparatus, of which the following is a specification.

This invention relates to a hydraulic mining system, and particularly to such a system for removing ores and the like from the bottom of streams.

The invention is more particularly directed to a conveyor constructed with riffles for retaining material and the further application of means whereby any material lodged in said riffles may be forced into the stream passing longitudinally of the conveyor.

The invention is illustrated in the accompanying drawings in which:—

Fig. 1 is a perspective view illustrating the use of the system.

Fig. 2 is a longitudinal sectional view of the apparatus showing the same in applied position.

Fig. 3 is an enlarged transverse section through the conveyor, showing particularly the relative position of the auxiliary pressure pipe.

The improved apparatus comprises a conveyor 1, preferably of tube-like form having a series of transverse riffles 2 on the bottom wall thereof. The top wall of the conveyor is formed with a series of closures or doors 3 which may be sealed in closed position when desired or opened to provide access to the interior of the conveyor for reaching the material on the riffles. The inlet end of the conveyor is provided with a scoop-like end 4, the bottom of which scoop-like end is also provided with riffles 2. At one side the conveyor is provided with a pipe 5 preferably extended lengthwise the conveyor and scoop, the riffles being each formed with an opening 6 to permit the passage of said pipe. In use the conveyor 1 is positioned in the stream from which the ore is to be gathered, the scoop 4 being forced into the bed of the stream, indicated at 7. The opposite end of the conveyor is preferably extended and opens below the surface of a pool 8 remote from and below the stream, so that the material delivered through the conveyor will be discharged into said pool for collection. Pipe 5 is formed at a point between each pair of adjacent riffles with an opening 9, and water is adapted to be forced through said pipe, from a pump or the like so that the water delivered through the openings 9 will maintain the heavy material caught by the riffles in a continual state of agitation so that it will be picked up by the stream and eventually delivered into the pool 8. In connection with the conveyor 1, the system utilizes a pipe 10 through which water is forced under pressure, the open end of the said pipe 10 discharging onto the bed 7 of the stream within the outline of the scoop 4.

From the above description it will be apparent that the material dislodged by the pressure stream through pipe 10 will be forced through the conveyor and delivered into the pool 8. The heavy material will be caught by the riffles as it settles from said stream, but as said material is agitated by the auxiliary stream from the openings 9 of the pipe 5, the material will be gradually raised until it is finally delivered into the pool.

What I claim is:—

A hydraulic mining system including a tube having an open end to be embedded in the source of ore supply with the opposite end located in a receiving pool, means for agitating the source of supply at the entrant end of the tube, riffles arranged transverse the tube in spaced relation throughout a determinate length thereof, and a water pipe extending lengthwise the tube and having openings leading to the space between the riffles.

In testimony whereof I affix my signature.

JAMES A. McARDLE.