J. A. CLARK.

FIREPROOF FILING CASE.

APPLICATION FILED JULY 19, 1912.

1,071,984. Patented Sept. 2, 1913.

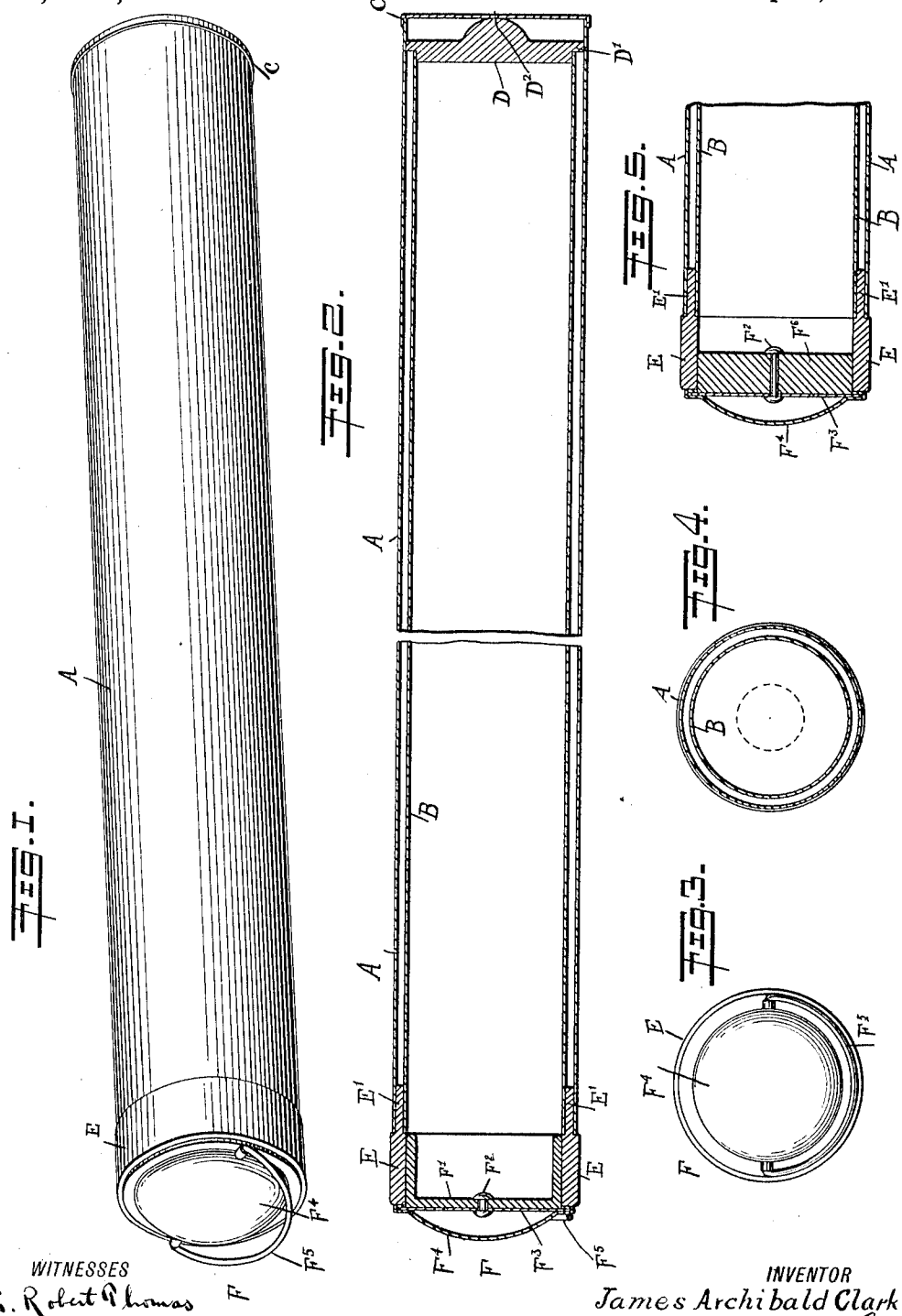

WITNESSES

G. Robert Thomas

Geo. G. Hoskins

INVENTOR

James Archibald Clark

BY Munn & Co

ATTORNEYS

COLUMBIA PLANOGRAPH CO., WASHINGTON, D. C.

UNITED STATES PATENT OFFICE.

JAMES ARCHIBALD CLARK, OF ALBANY, NEW YORK.

FIREPROOF FILING-CASE.

1,071,984. Specification of Letters Patent. Patented Sept. 2, 1913.

Application filed July 19, 1912. Serial No. 710,437.

To all whom it may concern:

Be it known that I, JAMES ARCHIBALD CLARK, a citizen of the United States, and a resident of Albany, in the county of Albany and State of New York, have invented a new and Improved Fireproof Filing-Case, of which the following is a full, clear, and exact description.

The object of the invention is to provide a new and improved fireproof filing case for filing rolled articles such as maps, charts, drawings and the like.

The body of the case is formed of concentric cylindrical shells, and the features of novelty are embodied in the construction, arrangement, and combination of parts hereinafter described and illustrated in the accompanying drawing, in which—

Figure 1 is a perspective view of the fireproof filing case; Fig. 2 is a longitudinal central section of the same; Fig. 3 is an elevation of the cover of the filing case; Fig. 4 is a cross section of the same; and Fig. 5 is a longitudinal central section of the upper or head end of a modified form of the fireproof filing case.

Within an outer cylindrical shell A of sheet metal or other suitable material is arranged, concentrically, another cylindrical shell B, an annular space being thus formed between the two shells. The outer shell A is closed at the bottom by a metallic cap C and the inner shell B is provided with a bottom cap D extending a short distance into the shell B and having an annular flange D′ fitting against the inner surface of the outer shell A so as to hold the shells A and B spaced apart and the shoulder enters the inner tube B, as shown in Fig. 2. The under side of the cap D is provided with a spherical projection D^2 abutting at its apex on the inner surface of the cap C so that practically a point contact is had between the projection D^2 and the cap C, and an air space is formed between the two caps. The inner cap D is made of fireproof material, such as asbestos fibers, compressed by suitable dies under heavy pressure into the desired shape.

The upper or entrance end of the filing case is provided with a head E made of fireproof material such as above described relative to the cap D, and the said head E is provided with a reduced portion E′ fitted in between the upper ends of the outer and inner shells A and B, as plainly indicated in the drawings, so that the two shells A and B are held spaced apart at the upper end. Into the head E fits a cover F for opening or closing the filing case for the introduction or removal of the rolled articles to be stored in the filing case. The cover F is formed of a body F′ of inverted cup shape, and to the outer end of the body F′ is secured by a rivet F^2 a metallic disk F^3 on which is crimped the marginal end of a concavo-convex cap F^4 provided with a bail F^5. The body F′ may be in the form of a disk F^6, as indicated in Fig. 5, but both bodies F′ and F^6 are made of fireproof material such as is used for the construction of the head E and the cap D above mentioned.

By the arrangement described a fireproof filing case is provided for safely housing rolled articles such as maps, charts, drawings and the like.

It will be noticed that by spacing the shells A and B apart an air space is provided which protects the contents of the filing case against heat incident to a fire in the building or room in which the filing case is stored at the time.

By making the cap D, the head E and body F′ of a fireproof material, it is evident that the contents of the filing case are protected against fire even when its ends are subjected to intense heat.

The cap D and the reduced portion E′ of the head E may be fastened in place by nails, rivets or other suitable fastening means (not shown).

Having thus described my invention, I claim as new and desire to secure by Letters Patent:

1. The improved fireproof filing case, comprising concentric cylindrical shells separated by an air space, a cap closing the bottom of the outer shell, a bottom cap for the inner shell which has a circumferential flange at its lower portion that abuts the inner surface of the outer shell and an adjacent shoulder which fits into the inner shell, the lower edge of the inner shell resting on the said flange, an annular head whose reduced inner edge is fitted between the adjacent upper ends of the shells, an inverted cup-shaped cover fitting into said head, a metallic disk riveted on the head, and projecting at its edge beyond the margin of the same, and a concavo-convex cap secured to the projecting edge of said disk, as described.

2. In a fire-proof filing case, the combination with the body formed of concentric cylindrical shells, of an annular head whose inner edge is reduced and fitted between the shells, a cup-shaped cover fitted removably into said head, a metallic disk riveted flatwise to the cover, and projecting at its margin beyond the margin of the cover, and a concavo-convex cap whose outer edge is crimped over the projecting edge of the disk, as described.

In testimony whereof I have signed my name to this specification in the presence of two subscribing witnesses.

JAMES ARCHIBALD CLARK.

Witnesses:
WM. T. BYRNE,
LEOPOLD MINKIN.

Copies of this patent may be obtained for five cents each, by addressing the "Commissioner of Patents, Washington, D. C."