Sept. 10, 1940. O. R. FLYNN ET AL 2,214,365

PHOTOGRAPHICALLY DYE-PRINTED FABRICS AND METHOD OF MAKING SAME

Filed June 18, 1938

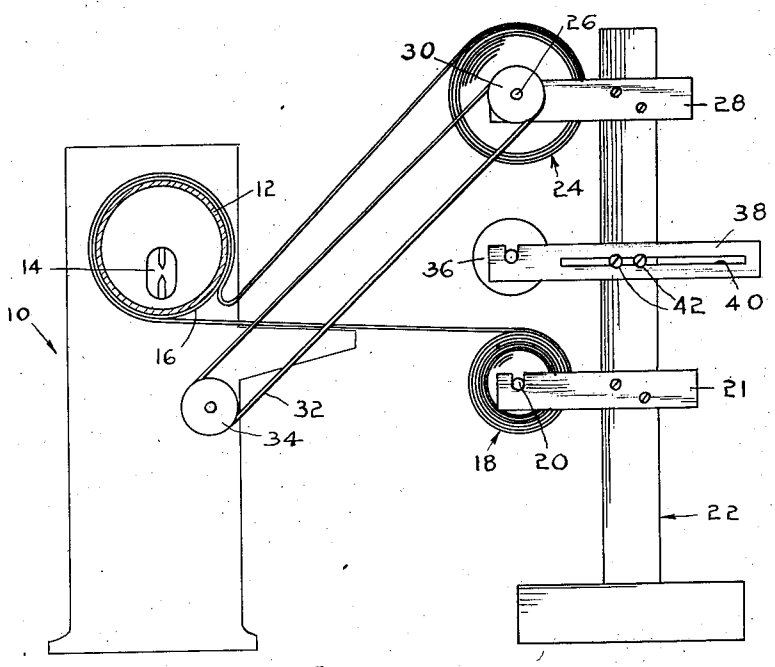

Fig. 1.

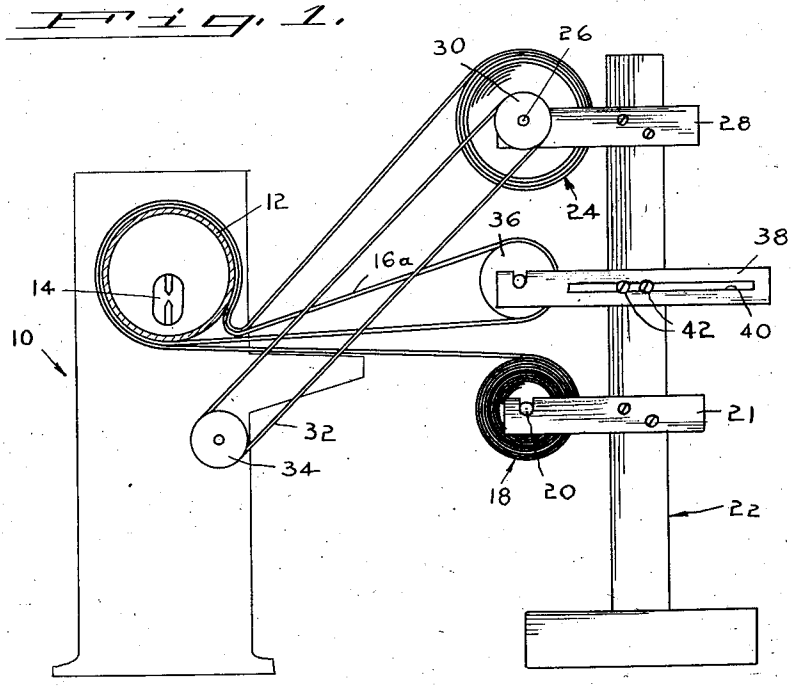

Fig. 2.

Inventor

OSCAR ROGERS FLYNN
AND FRANCIS STILLMAN RICHARDSON.

By Edwin Leisola

Attorney

Patented Sept. 10, 1940 2,214,365

UNITED STATES PATENT OFFICE

2,214,365

PHOTOGRAPHICALLY DYE-PRINTED FABRICS AND METHOD OF MAKING SAME

Oscar Rogers Flynn, East Orange, and Francis Stillman Richardson, Rutherford, N. J., assignors to Waldrich Company, Delawanna, N. J., a corporation of New Jersey

Application June 18, 1938, Serial No. 214,528

2 Claims. (Cl. 95—6)

This invention relates to the printing of fabrics and similar fibrous sheet material and more particularly to the printing of such materials by a dyeing and photographic process.

In accordance with the present invention, the fabric is impregnated with a dye which is soluble in water until acted upon by light and which, after exposure to light in the presence of air, becomes insoluble in water. Accordingly, when a fabric is impregnated with dye of this character and is subjected to the action of light through a photographic negative or other suitable medium, there is produced on the fabric a photographically printed design, pattern or picture corresponding to that of the negative. The photograph thus printed on the fabric is fast to light and is insoluble in water, while the dye of the fabric which has not been subjected to light through the negative in the printing process is readily soluble in water and can be removed from the fabric by simple washing operations. In accordance with this process, it is unnecessary to fix the photographically printed areas of the dyed fabric other than by merely exposing the dyed fabric to the action of light through the negative in the step of photographically printing the dyed fabric. While on the other hand, as stated, the dye which has not been acted upon by the light is readily washed out by a simple washing operation. The production of a photograpically printed fabric thus fast to light constitutes one of the objects of the present invention.

Another object of the invention is the provision of a photographic method of dye printing which can be performed while the dyed fabric is wet or dry and which preferably can also be performed in a continuous manner.

Another object is to provide a method of photographically dye-printing fabrics whereby there may be produced on the fabric faithful reproductions of the picture or design particularly with respect to excellent definition of detail both as to contour and color tones or shades.

A further object of the invention is the provision of a method of photographically dye-printing fabrics according to which the photograph reproduced on the fabric when the dyed fabric is exposed to light through the negative is permanent and of such character that subsequent treatment of the fabric for the purpose of removing the unaffected dye does not in any way impair the printed portion of the fabric, thereby eliminating one of the objections of prior methods according to which the light treated portions of the dyed fabric must be specially fixed with the result that the photograph on the fabric is liable to be impaired during the mechanical handling of the printed fabric in the course of fixing the light treated dye, in the course of removing the untreated dye, etc.

A yet further object of the invention is generally to provide an improved photographically printed fabric and the method of dye-printing fabrics by the photographic process.

The above objects of the invention and other objects which might hereinafter appear will be fully understood from the following description, reference being had to the accompanying drawing which illustrates the preferred manner of performing the method of the present invention.

In the drawing:

Fig. 1 is a more or less diagrammatic end view of apparatus utilized in performing the method of the present invention.

Fig. 2 is a view similar to Fig. 1 illustrating the use of a larger negative.

In performing the method in accordance with the present invention for photographically dye printing the fabric, the latter, after being freed from all foreign matter, such as dust, starch, or size, is impregnated with the dye. In other words, before dyeing the fabric, care is taken to condition the same by the removal of foreign materials which would interfere with the contact of the dye with the fibers of the fabric. The dyes which are utilized are normally soluble in water and are rendered insoluble by being subjected to the action of light. Dyes having this property and which in other respects are particularly suitable for accomplishing the objects of the present invention are the esters of the leuco compounds of vat dyes, the salts of the esters of the leuco compounds of the vat dyes being preferred. The leuco ester compounds are preferably the dyes designated by the trademark "Indigosols" and are readily available on the market in a wide range of colors. For preparing the light sensitive dye solution the dye, that is the salt of the ester of the leuco compound of the vat dye is dissolved in water in the portion of about twenty grams of dye in one liter of water, the temperature of the water being at about 150° F. For the color brown, warmer water is used, specifically water at a temperature of about 180° F. In the case of certain dyes, 4 cc. of formic acid per liter of dye solution is added. Other acids, as for example, sulfuric or acetic acid may be used, although

neither of these acids is recommended because in the case of sulfuric acid the fiber of the fabric might be impaired, while in the case of acetic acid, there is a tendency to stain the fabric. It has been found that the addition of the preferred acid, that is formic acid, in the above mentioned quantity accelerates the action of the light on the dye for rendering the latter insoluble, but except in the case of a color where the action of light is relatively slow, it is unnecessary to use the accelerator as excellent results have been obtained without the same. In some instances we have found that the use of hygroscopic agents such as glycerine and particularly urea have a favorable accelerating influence.

The fabric, in dry condition and with all such foreign materials which would interfere with the impregnation of the dye removed, is immersed in the dye solution to thoroughly soak the fabric therewith. The solution, at the time of the immersion of the fabric therein, may be at ordinary room temperature except in the case of a less soluble dye such as brown dye when the solution is kept preferably at a temperature of about 140° F., as the brown dye has a tendency to crystallize at room temperature. The dye impregnated fabric although thoroughly soaked with the dye should preferably be in non-drip condition when subjected to treatment in the photographic printing frame. Accordingly, after the fabric is impregnated with the dye by immersing the fabric in the dye solution, excess dye is removed in any suitable way, preferably by passing the fabric between quetch rolls so that the fabric is as moist as possible but is just short of dripping wet.

After being thus impregnated with the dye, the fabric is rolled up without exposure to strong light and thereafter, preferably while the fabric is still moist, is fed through the photographic printing machine for exposing the fabric to the action of light in the presence of air through the photographic negative or through a film carrying the desired photograph or design which is to be produced on the fabric. The fabric when thus exposed to light is preferably in the moist condition described above as just short of dripping wet, although the fabric may be less moist or even dry.

Referring now to Fig. 1 of the drawing, the method performed in accordance with the present invention for photographically printing the dyed fabric will now be described. The printing frame used in performing the present method is indicated generally by the reference numeral **10**. Said frame comprises a rotary transparent cylinder **12** of glass or other suitable material within which there is positioned a suitably strong light **14**. The photographic negative or design carrying film **16** is mounted on the outer surface of cylinder **12** in fixed relation thereto and rotates with said cylinder about light source **14**. The roll **18** of dye impregnated fabric carried by spindle **20** is supported for rotation at its opposite ends in arms **21**, one at each end of the supporting rack **22**. The fabric is supplied from roll **18** to the printing frame **10** and more particularly is brought into contact with the outer surface of the negative **16** mounted on the glass cylinder, being held in contact with said glass cylinder by suitable presser members (not shown) conventionally used in printing frames. The fabric thus disposed around the negative **16** is subjected to the action of light which passes through the latter with the result that the dye which is acted upon by the light is rendered insoluble. The printed fabric is then wound on take-up roll **24** on a spindle **26** mounted for rotation at its ends in arms **28**, one at each end of rack **22**. Spindle **26** is preferably positively driven at the same speed of rotation as cylinder **12**. For this purpose, said spindle is provided with a pulley **30** driven by a belt **32** which in turn is driven by a pulley **34** actuated by the driving mechanism of printing frame **10**.

In passing the fabric through the printing frame for exposure to light, the speed may vary between wide limits depending upon the character of the design or the degree of development desired. A speed of one foot per minute, on the average, has been found satisfactory for all colors where there was utilized in the printing frame eight arc lamps spaced uniformly longitudinally within the glass cylinder of the printing frame and operating on **230** volts with each lamp consuming about five amperes. In the printing frame referred to the length of cylinder **12** is fifty-four inches. As the fabric is preferably in a moist condition when passed through the printing frame in contact with negative **16**, the latter has applied thereto on both surfaces thereof a waterproof coating. For this purpose, a suitable waterproof varnish is utilized. A suitable varnish is available on the market under the trade name "Hilo varnish C". In lieu of a waterproof varnish or coating, a transparent waterproof film or sheet may be interposed between the negative and the fabric.

As illustrated in Fig. 2 of the drawing, provision is made for utilizing a negative **16***a* which is considerably larger than the negative **16** hereinbefore mentioned. This larger negative may be necessary when the photograph or the repeat unit of the design or pattern to be printed on the fabric is large, while the smaller negative **16** which is mounted directly upon the glass cylinder **12** will ordinarily be sufficient for relatively smaller photographs or for relatively small repeat units of the design. The larger negative **16***a*, instead of being mounted directly on cylinder **12** is, as here shown, in the form of an endless belt which engages glass cylinder **12** and a roller **36** mounted at its ends for rotation in arms **38** carried by rack **22**. As the length of the negative **16***a* may vary, arms **38** and roller **36** carried thereby are adjustable toward and away from cylinder **12**. For this purpose each of the said arms is provided with a longitudinally extending slot **40** engageable with adjusting screws **42** for releasably fixing said arms in the desired position. As the same rack **22** may be used either when the negative is mounted directly on the cylinder or when the negative is in the form of a belt or loop, the roller **36** is also illustrated in Fig. 1 of the drawing, but in the apparatus there illustrated said roller is not in use.

It will be understood that in the operation of the apparatus in accordance with the method of the present invention the fabric is passed continuously and progressively through the printing frame in contact with the negative until the entire length of fabric of the roll **18** has been subjected to the action of light in said printing frame for converting the dye exposed to the light to its insoluble state, leaving the unexposed dyed portions of the fabric in water soluble condition.

After the dyed fabric is thus photographically printed it is washed for the purpose of removing the unexposed and unchanged dye. For this

purpose the fabric is first washed in clear water at a temperature of approximately 140° F. Thereafter, the fabric may, if desired, be further washed in soapy water at about the same temperature until the unexposed dye has been removed and rinsed in clear water. To make sure that all of the unexposed dye has been removed by the washing operation, a piece of fabric may be tested by exposure to light. If the exposure to light produces no change in the color of the portion of the fabric thus tested, the complete removal of the surplus dye is indicated.

In general, all fabrics, smooth or pile and including paper or other fibrous sheet material may be photographically dye printed in accordance with the present invention. It has been found, however, that in the case of wool the dye attaches itself to the fiber and, even though unexposed to light, resists removal by water or soapy water as hereinbefore described. This resistance to the removal of the dye also applies to pure silk but unlike wool, pure silk can be treated with an alkali for removing the dye, that is the dye not made insoluble in water by the action of the light on the fabric in the printing frame, without impairing the fibers. The process of this invention is particularly advantageous in respect to silk, rayon, cotton and linen fabrics and more generally to all fabrics having fibers derived from cellulose.

Thus it is seen that the photographically dyed printed fabric and the method of making the same as hereinbefore described are well adapted to accomplish the several objects of the present invention. It is to be noted that the utilization for the purposes of the present invention of a dye of the properties referred to, that is, dye which is rendered water insoluble by the action of light gives rise to several important advantages. More particularly, it is to be observed that since the exposed dye is water insoluble, the fabric after being passed through the printing frame can be wound on a roll and otherwise handled without danger of impairing the reproduced design on the fabric, it being unnecessary to take the precautions heretofore required in connection with the photographic printing of fabrics in which it was necessary to fix the dye after the exposure thereof to light. In accordance with the present invention it is not only unnecessary to fix the dye after the latter have been exposed to light in the printing thereof, but the printed fabric can be handled in such a manner as to facilitate the production thereof and to simplify the manufacturing operations. It will be observed also that one of the advantages of the present invention is that it makes possible the continuous process, with the dyed fabric either in wet or dry condition, and enables a continuous printing or the application of repeat unit of a design on successive portions of a length of fabric as in ordinary engraved roller printing. It will be understood also that the present method not only eliminates the danger of impairing the printed design or photograph prior to the fixing of the latter, but also eliminates the necessity for the utilization of special fixing and developing chemicals which are required in other photograph dye printing processes.

In accordance with our method, the fabric may be treated continuously from the state in which it is dry, prior to cleansing and dyeing, to the finished state in which the dye-printed fabric is washed and dried. Thus, the fabric may be treated progressively and in sequence, one step following the other in a continuous manner, for (1) removing the foreign matter to condition the fibers of the fabric to receive the dye, (2) the dyeing of the fabric, (3) the exposure of the dyed fabric to light in the printing frame, and (4) the washing of the dye-printed fabric to remove the unchanged dye. Accordingly, the dyed fabric may be fed directly from the dyeing vat, preferably between quetch rolls, to the printing frame, it being unnecessary to wind the dyed fabric on a supply roll although this is preferred.

While we have disclosed the preferred embodiment of our invention and the preferred manner of practising the same, it will be understood that the invention is susceptible of certain modifications, changes and additions. Thus, instead of immersing the fabric in the dye, the latter may be applied by a roller carrying the desired design, as in ordinary printing, and thereafter the fabric is passed through the printing frame. It will be understood further that multi-colored effects may be obtained on the same fabric by repeating the process with similar dyes. It is to be noted that commercially the dyes herein referred to as esters of leuco compounds are in the form of salts of such esters and wherever such term is used we wish it to be understood as meaning either the esters having the properties referred to or the salts of the esters. We do not wish to be limited precisely to the embodiments of the invention herein illustrated or described except as may be required by the appended claims.

Having thus described our invention, what we claim and desire to secure by Letters Patent is:

1. The method of photographically dye-printing fabrics of indefinite length with a repeat unit positioned on successive portions of the fabric, which method comprises impregnating said length of fabric with an ester of a leuco compound of a vat dye in a solution containing formic acid, then progressively exposing successive portions of said fabric to the action of light through a negative carrying said repeat unit, and thereafter washing out from the fabric the dye which has not been exposed to the light for making the same insoluble.

2. The method of photographically dye-printing fabrics, which comprises impregnating the fabric with an ester of a leuco compound of a vat dye in a solution containing formic acid, then exposing the fabric to light through a negative, and thereafter washing out from the fabric the leuco ester compound which has not been made insoluble by exposure to light.

OSCAR ROGERS FLYNN.
FRANCIS STILLMAN RICHARDSON.