(No Model.) 2 Sheets—Sheet 1.

J. RAYNALD.

VAULT COVER.

No. 315,836. Patented Apr. 14, 1885.

FIG. 1.

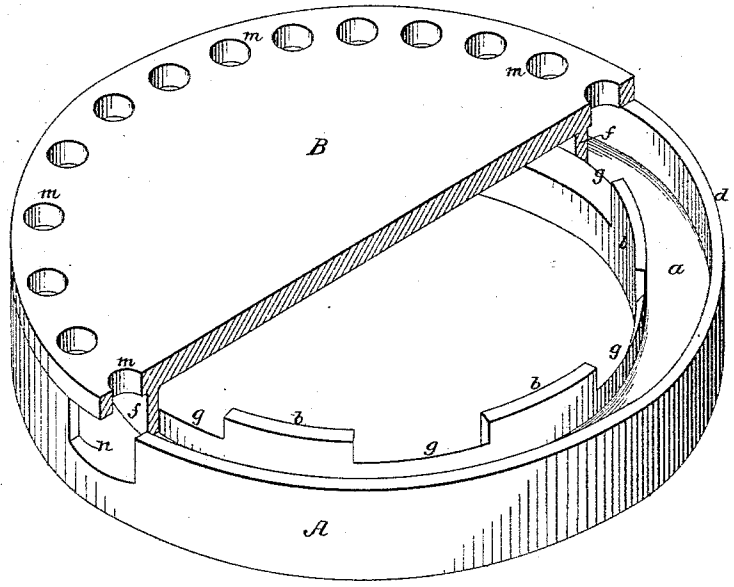

FIG. 2.

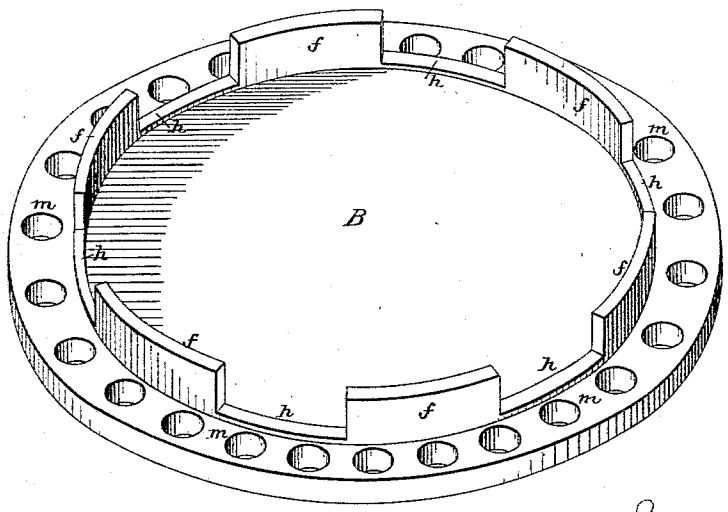

Witnesses:
John M. Clayton.
Harry Drury

Inventor:
John Raynald
by his Attorneys
Towson & Sons

N. PETERS. Photo-Lithographer, Washington, D. C.

(No Model.) 2 Sheets—Sheet 2.

J. RAYNALD.

VAULT COVER.

No. 315,836. Patented Apr. 14, 1885.

FIG. 4.

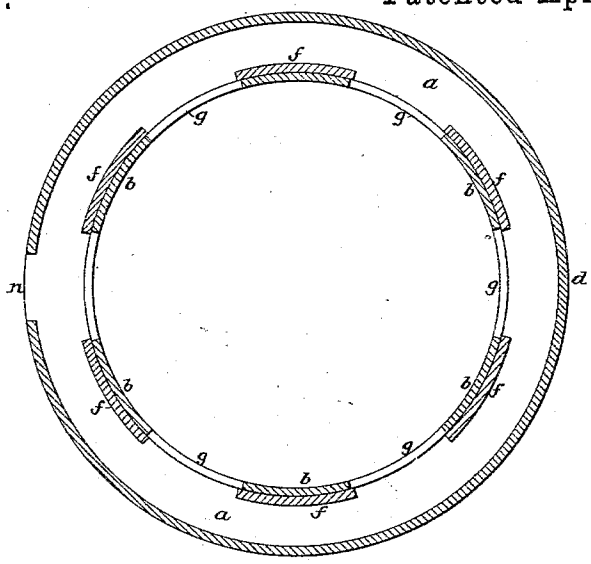

FIG. 6.

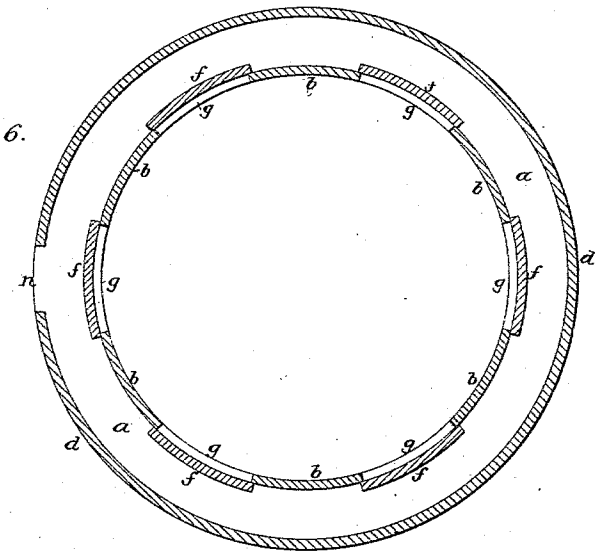

FIG. 3.

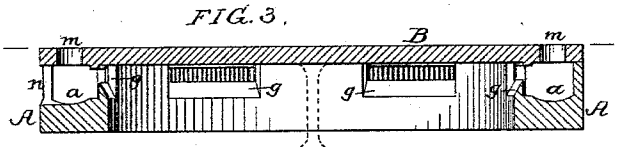

FIG. 5.

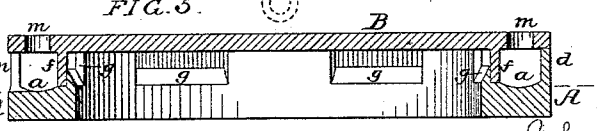

Witnesses:
John M. Clayton
Harry Drury

Inventor:
John Raynald
by his Attorneys
Dodson & Sons

N. PETERS. Photo-Lithographer, Washington, D. C.

UNITED STATES PATENT OFFICE.

JOHN RAYNALD, OF PHILADELPHIA, PENNSYLVANIA.

VAULT-COVER.

SPECIFICATION forming part of Letters Patent No. 315,836, dated April 14, 1885.

Application filed November 3, 1884. (No model.)

To all whom it may concern:

Be it known that I, JOHN RAYNALD, a citizen of the United States, and a resident of Philadelphia, Pennsylvania, have invented certain Improvements in Vault-Covers, of which the following is a specification.

The object of my invention is to so construct a vault-cover that the proper ventilation of the vault can be effected when desired, or the vault closed in wet or cold weather.

In the accompanying drawings, Figure 1 is a perspective view of a vault-cover constructed in accordance with my invention, the lid being shown in section; Fig. 2, an inverted perspective view of the lid; Fig. 3, a longitudinal section of the vault-cover; Fig. 4, a sectional plan view of the same; Fig. 5, a longitudinal section of the vault-cover, with the lid adjusted to a different position from that shown in Fig. 3; and Fig. 6, a sectional plan view of Fig. 5.

A is the fixed portion of the cover, and B the usual lid, the fixed portion of the cover comprising a ring with a groove, *a*, and inner and outer flanges, *b* and *d*. The lid rests upon the tops of the flanges *b* and *d* and has a downwardly-projecting flange, *f*, bearing against the flange *b*. In the latter are formed a series of recesses, *g*, and in the flange *f* are similar recesses, *h*, the lid outside of the flange *f* having a series of openings, *m*. When the lid is adjusted to the position shown in Figs. 3 and 4, the recesses *g* and *h* are in line with each other, and air from the vault can escape through these recesses and the openings *m* in the lid, so as to provide for the proper ventilation of said vault; but in cold or wet weather the lid is adjusted to the position shown in Figs. 5 and 6, the recesses *h* being out of line with the recesses *g* and the flow of cold air or water into the vault being prevented. Any water which passes through the openings *m* is caught in the groove *a* and escapes through the recess *n* in the outer flange, *d*, of the ring A.

The lid B may have a central stem terminating in an eye, as shown by dotted lines in Fig. 3, or may be provided with other means whereby it can be turned and secured in position after adjustment, and in cases where it is not necessary to have the cover flush with the pavement, as shown by dotted lines in Fig. 3, the outer flange of the ring A and the perforated outer portion of the lid may be dispensed with, the level of the pavement being as shown by dotted lines in Fig. 5.

I claim as my invention—

1. The combination of the ring A, having a recessed internal flange, *b*, with a lid, B, having a recessed flange, *f*, in contact with the flange *b*, as set forth.

2. The combination of the ring A, having a groove, *a*, recessed inner flange, *b*, and recessed outer flange, *d*, with the lid B, having a recessed flange, *f*, and perforations *m*, as set forth.

In testimony whereof I have signed my name to this specification in the presence of two subscribing witnesses.

J. RAYNALD.

Witnesses:
JOHN E. PARKER,
HARRY SMITH.