W. S. GRAHAM.

AUTOMOBILE USE REGISTERING APPARATUS.

APPLICATION FILED AUG. 18, 1915.

1,181,306. Patented May 2, 1916.

Fig. 1.

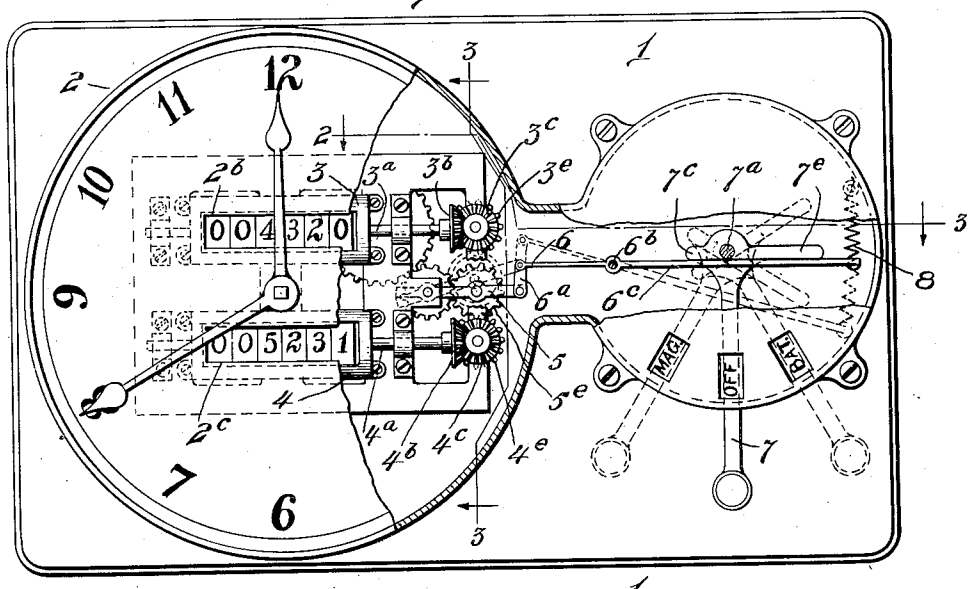

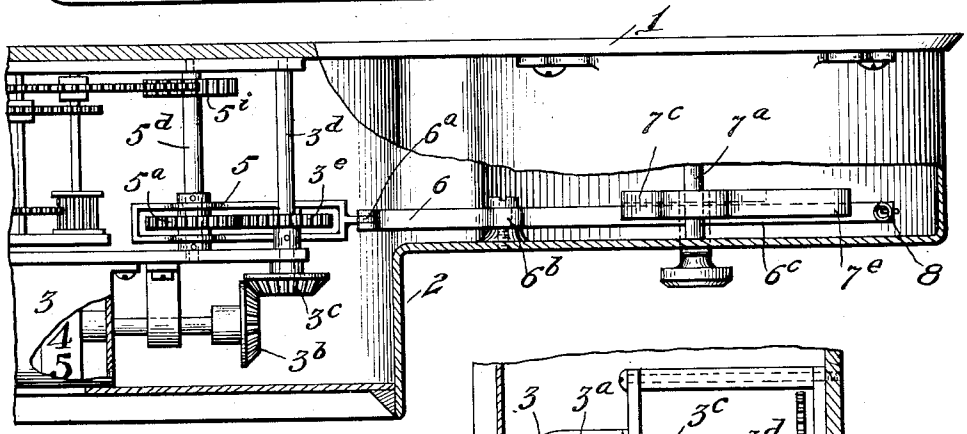

Fig. 2.

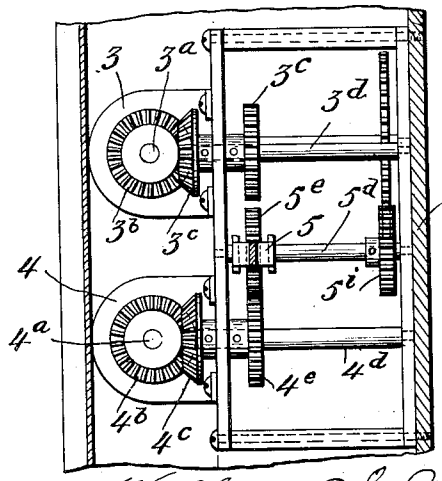

Fig. 3.

Witnesses

B. M. Offutt

W. Wallace Nairn

Inventor

William S. Graham

By Fowell & Fowell

Attorneys

UNITED STATES PATENT OFFICE.

WILLIAM S. GRAHAM, OF NORFOLK, VIRGINIA.

AUTOMOBILE-USE-REGISTERING APPARATUS.

1,181,306. Specification of Letters Patent. Patented May 2, 1916.

Application filed August 18, 1915. Serial No. 46,096.

To all whom it may concern:

Be it known that I, WILLIAM S. GRAHAM, a citizen of the United States, residing at Norfolk, in the county of Norfolk and State of Virginia, have invented certain new and useful Improvements in Automobile-Use-Registering Apparatus; and I hereby declare that the following is a full, clear, and exact description thereof, reference being had to accompanying drawings, which form part of this specification.

This invention is a novel registering apparatus particularly designed for use with automobiles and adapted to register the actual time the automobile or machine is in operation or use, and also the time it is not in use.

The primary object of the invention is to prevent an automobile or other machine being used improperly without the knowledge of the owner, by registering the time it is used, whenever it is used and the time it is not in use; and the invention in brief comprises a time actuated mechanism or clock and preferably a pair of registering mechanisms adapted to be alternately actuated by the clock mechanism and which respectively register the time the machine is in use, and the time it is not in use; said registers being put alternately into operative relation with the time mechanism by means preferably controlled by the switch that controls the electric current delivered to the spark plug of the engine; and the parts are so arranged that, for example, when the switch is closed to deliver either the magneto or battery current to the engine, the clock mechanism will be caused to operate that register which indicates the length of time the engine is in operation; and when the switch is opened to cut off the electric current the other register is thrown into operative relation with the clock mechanism and registers the time during which the engine is not in use. All the mechanisms of the apparatus are suitably incased so that they cannot be tampered with by any dishonest person.

I will explain the invention with reference to the accompanying drawings which illustrate one embodiment thereof, and when understood will enable others to adopt and use the invention.

In said drawings:—Figure 1 is a front view, partly broken away, of an apparatus embodying the invention. Fig. 2 is an enlarged detail sectional view on line 2—2 Fig. 1. Fig. 3 is a detail vertical section on line 3—3 Fig. 1.

In the drawings 1 designates a base plate on which the several parts of the apparatus may be mounted. Upon this base is a clock or time mechanism 2, preferably such as is ordinarily used for automobiles; but may be of any suitable construction. This time mechanism is provided with an ordinary dial plate and hands as indicated in the drawings. The dial plate is preferably provided with upper and lower slots 2^b, 2^c behind which are arranged registering mechanisms, preferably of the barrel or cylindric type, indicated at 3 and 4. These mechanisms are operated by and from the time mechanism as hereinafter explained, and the lower is intended to indicate the time that the machine or engine is idle or not in operation; while the upper register mechanism is intended to indicate the time that the machine or engine is in operation or use.

The registers 3 and 4 may be of any suitable type, and in general each register, when of the type indicated in the drawings, has a number of cylindric rotatable disks arranged in axial alinement and adapted to successively register "units", "tens" etc., as usual. The "units" wheel of each register may record minutes, or any desired number of minutes that is taken as the unit of measure of time; and such number of registering disks may be employed in each register as will enable the same to be operated a long time without having to be reset. Each registering disk in each registering mechanism will upon making one rotation "carry over" to the next disk; and so on in the usual manner. There are various suitable registering mechanisms now on the market which can be readily adapted for my purpose, and it is unnecessary to enter into any further detailed explanation of the registering mechanisms *per se*.

The upper registering mechanism 3 will be operated by its shaft 3^a, in the usual manner when said shaft is turned; and the first or units register wheel in mechanism 4 will be similarly operated by its shaft 4^a. The shaft 3^a carries a bevel gear 3^b which meshes with a similar bevel gear 3^c on a shaft 3^d which may be mounted in the clock frame or in other suitable support attached to the casing; to shaft 3^d is also attached a pinion

3e, and when shaft 3d is turned the register 3 will be actuated. Similarly shaft 4a has a bevel pinion 4b meshing with a bevel pinion 4c on a shaft 4d which may be journaled in the clock frame, or other suitable support, and a pinion 4e is attached to shaft 4d, and by rotating shaft 4d the register 4 will be operated. The gears 3e and 4e lie practically in the same vertical plane; and intermediate these pinions 3d, 4d is a pinion 5e which is mounted in a swinging yoke 5, which may be pivotally mounted upon a shaft 5d that may be suitably journaled in the clock frame, and which shaft has a pinion 5a meshing with pinion 5e; shaft 5d also carries a pinion 5i that meshes with one of the clock pinions, as indicated in the drawings. Preferably the gearing is so proportioned that if for example the first disk of either register is to indicate minutes the pinion 5e will be rotated from and by the clock mechanism once for each minute of time. The yoke 5 is swingable to bring pinion 5e into mesh with either gear 3e or 4e. As shown said yoke 5 is pivotally connected by a link 6a to one arm 6 of a controlling lever fulcrumed at 6d on a support adjacent the clock, and preferably within the casing or part of the casing containing the electric switch controlling the connections between the magneto and the battery and the sparking plugs of the engine (not shown). This switch may be of ordinary construction, being merely conventionally indicated in the drawings. It is shown as operable by a handle 7 which is connected to the main switch operating shaft 7a. The switch lever 7 is adjustable as usual to any one of three positions. In its central or intermediate position (indicated at "Off") the engine is disconnected both from the battery and the magneto. In its extreme right hand position (indicated at "Bat") the engine will be connected to the battery; in its extreme left hand position (indicated at "Mag.") the engine will be connected to the magneto; the said electrical connections are well understood and in common use and therefore need no detailed explanation

The arm 6c of the controlling lever extends beside the shaft 7a and is adapted to be engaged by a cam member on said shaft. The said cam has a short arm or portion 7c adapted to engage and depress arm 6c of the lever when the switch lever 7 is swung to "battery" position; and said cam also has a long arm or portion 7e also adapted to engage and depress the arm 6c when the switch lever 7 is swung to "magneto" position. Thus either arm of the cam will depress the lever 6c and cause it to raise yoke 5 and bring pinion 5e into mesh with pinion 3e, and thus cause the "use" register 3 to be operated whenever the switch is closed. When the switch lever 7 is in "off" position the yoke 5 will be depressed by a suitably arranged spring and hold pinion 5e in mesh with pinion 4e, and the clock then actuates the "idle" register 4 and the time that the machine is idle is registered in minutes, or other predetermined units of time, on the register 4. A contractile spring 8 is shown as connected to the lever 6c and is adapted to depress the yoke and hold the pinion 5e normally in engagement with pinion 4e until lever 6c is displaced by shifting the lever 7. When lever 7 is thrown to either right or left, as indicated in dotted lines in Fig. 1, the cam depresses lever 6c and rocks yoke 5 carrying gear 5e out of mesh with pinion 4e and into mesh with pinion 3e and the clock mechanism actuates the "use" register and tends to actuate it so long as either the magneto or battery is in connection with the engine. The part 6 of the controlling lever is preferably resilient so that there will be no injurious clash between the teeth of the pinion 5e and the pinion 4e or 3e when pinion 5e is moved into engagement therewith. Thus it will be seen that whenever the engine or machine is in operative condition the "use" register 3 will be operated from the time mechanism and the total time that the engine is in use will be registered during which time the idle register 4 is disconnected from the time mechanism. When the switch lever is shifted so that both the magneto and the battery are disconnected from the engine, the use register 3 is disconnected from the time mechanism, while the idle register mechanism 4 is connected with and operated by the time mechanism. Thus one or the other of the register mechanisms will always be operatively connected with the time mechanism according to whether or not the engine is idle or in use.

The working parts of the apparatus should be protected by a suitable exterior casing or casings, which may be of any desired form, to present a neat appearance and prevent tampering with any of the mechanisms, while permitting the shifting of the switch lever.

While I prefer to provide the apparatus with one register to indicate the length of time during which the automobile or machine is in actual use, and another register to show the time that the machine is not in use, in some cases one of the registers might be dispensed with.

I prefer to have the registering devices within the clock casing, as shown, so that the registering mechanism may be observed through openings in the dial plate.

The details of construction and arrangement of parts may be varied while retaining the essential features of the invention.

What I claim is:

1. In combination, a continuously operating time mechanism, a manually operable

switch lever adapted to control an electric current, a pair of registering mechanisms adjacent the time mechanism, a movable pinion intermediate the said registering mechanisms adapted to be alternately meshed therewith, means for continuously driving said pinion from the time mechanism, means operable by the switch lever when moved to close the circuit for causing said pinion to mesh with one of the registering mechanisms while the circuit is closed, and means for automatically throwing the said pinion into mesh with the other registering mechanism when the switch lever is returned to normal or "open" position, substantially as described.

2. In a time registering mechanism for automobiles, the combination of a switch lever controlling the electric circuit to the motor, a continuously operating clock mechanism adjacent the switch, a pair of separate registering mechanisms adjacents the clock mechanism, a swingable lever carrying a pinion adapted to mesh with either registering mechanism and actuate same, gearing for continuously driving said pinion from the clock mechanism, means for holding said swingable lever normally in position to engage the pinion with one registering mechanism when the switch is open, and means operated by the closing of a switch to shift said lever and move the pinion out of mesh with the latter registering mechanism and into mesh with the other registering mechanism, substantially as described.

3. In combination a clock mechanism, a pair of independent registering mechanisms adjacent the clock mechanism each provided with a pinion, a movable support, a pinion on said support adapted to be meshed with the pinion of either of the registering mechanisms, and gearing between said movable pinion and the clock mechanism, a switch lever controlling the electrical circuit to the motor; a pivoted lever connected at one end to the movable support, a spring arranged to normally hold the movable pinion in engagement with the pinion of one of the registering mechanisms when the switch lever is in "off" position, a cam on said switch lever engaging the pivoted lever whereby when the switch lever is shifted to close the circuit the said movable pinion is shifted into engagement with the pinion of the other registering mechanism, substantially as described.

4. In an automobile "use" and "idle" time register; the combination of a clock mechanism, a pair of independent registering mechanisms adjacent the clock mechanism, each provided with a pinion, a movable support, a pinion on said support adapted to be meshed with the pinion of either of the registering mechanisms, gearing between said movable pinion and the clock mechanism, and a switch lever adjacent the clock mechanism controlling the electrical circuit to the motor; with a pivoted lever connected at one end to the movable support and extending past the switch lever, a spring engaging said pivoted lever to normally hold the movable pinion in engagement with the pinion of one of the registering mechanisms when the switch lever is in closed position; and a pair of cams on said switch lever engaging the pivoted lever whereby when the switch lever is turned in either direction to close the circuit the said pivoted lever is caused to shift the movable pinion into engagement with the pinion of the other registering mechanism, substantially as described.

In testimony that I claim the foregoing as my own I affix my signature in presence of two witnesses.

WILLIAM S. GRAHAM.

Witnesses:
THEODORE S. GARNETT,
W. R. L. TAYLOR.