(12) INTERNATIONAL APPLICATION PUBLISHED UNDER THE PATENT COOPERATION TREATY (PCT)

CORRECTED VERSION

(19) World Intellectual Property Organization
International Bureau

(43) International Publication Date
2 September 2010 (02.09.2010)

PCT

(10) International Publication Number
WO 2010/097724 A9

(51) International Patent Classification:
A61F 2/42 (2006.01)

(21) International Application Number:
PCT/IB2010/050562

(22) International Filing Date:
8 February 2010 (08.02.2010)

(25) Filing Language: English

(26) Publication Language: English

(30) Priority Data:
61/202,211 6 February 2009 (06.02.2009) US

(71) Applicant *(for all designated States except US)*: **ORTHO-SPACE LTD.** [IL/IL]; 21 Atir Yeda Street, 44643 Kfar-Saba (IL).

(72) Inventor; and
(75) Inventor/Applicant *(for US only)*: **SHOHAT, Shaul** [IL/IL]; 69 HaGiva Street, 73134 Kfar HaOranim (IL).

(74) Agents: **G.E. EHRLICH (1995) LTD.** et al.; 11 Menachem Begin Street, 52521 Ramat Gan (IL).

(81) Designated States *(unless otherwise indicated, for every kind of national protection available)*: AE, AG, AL, AM, AO, AT, AU, AZ, BA, BB, BG, BH, BR, BW, BY, BZ, CA, CH, CL, CN, CO, CR, CU, CZ, DE, DK, DM, DO, DZ, EC, EE, EG, ES, FI, GB, GD, GE, GH, GM, GT, HN, HR, HU, ID, IL, IN, IS, JP, KE, KG, KM, KN, KP, KR, KZ, LA, LC, LK, LR, LS, LT, LU, LY, MA, MD, ME, MG, MK, MN, MW, MX, MY, MZ, NA, NG, NI, NO, NZ, OM, PE, PG, PH, PL, PT, RO, RS, RU, SC, SD, SE, SG, SK, SL, SM, ST, SV, SY, TH, TJ, TM, TN, TR, TT, TZ, UA, UG, US, UZ, VC, VN, ZA, ZM, ZW.

(84) Designated States *(unless otherwise indicated, for every kind of regional protection available)*: ARIPO (BW, GH, GM, KE, LS, MW, MZ, NA, SD, SL, SZ, TZ, UG, ZM, ZW), Eurasian (AM, AZ, BY, KG, KZ, MD, RU, TJ, TM), European (AT, BE, BG, CH, CY, CZ, DE, DK, EE, ES, FI, FR, GB, GR, HR, HU, IE, IS, IT, LT, LU, LV, MC, MK, MT, NL, NO, PL, PT, RO, SE, SI, SK, SM, TR), OAPI (BF, BJ, CF, CG, CI, CM, GA, GN, GQ, GW, ML, MR, NE, SN, TD, TG).

Published:

— *with international search report (Art. 21(3))*

[Continued on next page]

(54) **Title**: EXPANDABLE JOINT IMPLANT

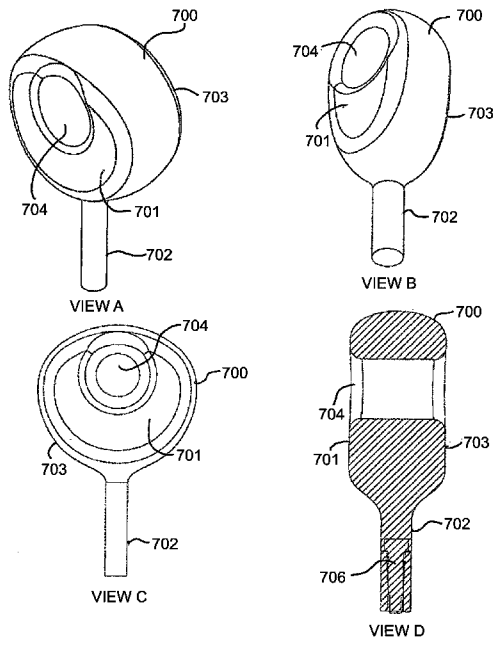

FIG. 7

(57) **Abstract**: A soft, expandable, implantable device sized for spacing between small bones comprising a first smooth surface on which a first small bone may slide. Implant (700) includes an opening (704) (passage) extending through the device for promoting fibrotic development through the opening from a direction from both thumb metacarpal (202) and trapezium (204). Passage (704) is optionally distally positioned from a one-way inflation valve (706) included inside an inflation port (702) substantially limiting possible damage to the device due to the insertion pressure of an expansion fluid. An inflation cannula and/or needle may be attached to inflation port (702) and inflation valve (706) for introducing the expansion fluid into the device. Implant (700) is inserted in a deflated mode and is positioned so that thumb metacarpal (202) abuts distal side (703) of the device when expanded and trapezium (704) abuts proximal side (701). Both distal side (703) and proximal side (701) include a smooth surface for allowing relative movement of thumb metacarpal (202) and trapezium (204) with respect to device (700).

WO 2010/097724 A9

WO 2010/097724 A9

(48) **Date of publication of this corrected version**:
28 July 2011

(15) **Information about Correction**:
see Notice of 28 July 2011

EXPANDABLE JOINT IMPLANT

RELATED APPLICATION/S

This application claims the benefit of United States Provisional Application No. 61/202,211 filed on 6 February 2009 the disclosure of which is incorporated herein by reference in its entirety. The contents of the above document are incorporated by reference as if fully set forth herein.

FIELD AND BACKGROUND OF THE INVENTION

The present invention, in some embodiments thereof, relates to body implantable devices and, more particularly, but not exclusively, to a small bones implant device and a method for implanting between small bones.

A human thumb metacarpal is connected to the wrist through a first carpometacarpal (CMC) joint also known as the trapeziometacarpal joint. A base of the thumb metacarpal articulates with a saddle shaped trapezium, the saddle shaped articulation providing a stability required for grasping actions. Furthermore, the saddle shaped articulation allows for thumb motion in a tri-axial mode, which may make the joint relatively susceptible to arthritic degeneration. Soft tissue surrounding the joint, including the beak ligament, may additionally contribute to the arthritic degeneration by causing joint surface subluxation. Damage to the CMC joint may therefore be debilitating and may require surgical intervention when other measures do not suffice.

Patients suffering from arthritis of the CMC joint may recur to surgical intervention as a possible solution to their problem. A commonly employed solution is CMC joint arthroplasty also referred to as trapezectomy. This may be performed by an open surgical procedure or by an arthroscopic procedure, a goal of the surgical intervention being to obtain a painless strong thumb without losing motion or causing deformation.

A number of reconstructive procedures are known in the art for treating CMC joint arthritis. These include interpositional arthroplasty, resection arthroplasty of the trapezium, resection interpositional arthroplasty of the trapezium, total and partial joint

replacement arthroplasty of the CMC joint (several types of prosthetic joints), and arthroscopic procedures such as CMC arthroplasty and CMC joint arthrodesis.

US Patent No. 7,037,342 "IMPLANT FOR RECONSTRUCTIO OF JOINTS" relates to "A spacer member (1) is intended to be placed between the ends of the bones which are to be connected, one end of the spacer member being designed to form a joint surface against one of the bone ends (6,7). A joint-stabilizing connection (2,3) is arranged to connect the bones. The spacer member (1) is made of at least one tissue-compatible material."

US Publication No. 2006/0241778 "INTERPOSITIONAL BIARTICULAR DISK" relates to "An interpositional biarticular disk implant (**11**) having a circular peripheral rim, a generally toroidal axial center opening (**13**) and convex upper and lower surfaces (**15, 17**) is implanted between resected concave surfaces of the metacarpal base and the trapezium or other carpal bone in a CMC joint replacement. The disk (**11**) is anchored in operative position through the use of a flexable cond, such as a harvested tendon that passes through the center opening (**13**) and through osseous passageways created in the two facing bones."

SUMMARY OF THE INVENTION

There is provided in accordance with an exemplary embodiment of the invention, a soft, expandable, implantable device sized for spacing between small bones comprising a first smooth surface on which a first small bone may slide.

In an exemplary embodiment of the invention, said device is biodegradable in the body. Optionally or alternatively, said small bones comprise bones of a human hand. Optionally or alternatively, said small bones comprise bones of a human foot.

In an exemplary embodiment of the invention, said small bones comprise at least one of a trapezium, a trapezoid bone, a metacarpal bone, and a scaphoid bone.

In an exemplary embodiment of the invention, the device comprises an inflation port for inflating said device.

In an exemplary embodiment of the invention, the device comprises at least one passage extending from a distal side to a proximal side of the device for promoting fibrotic development between said small bones.

In an exemplary embodiment of the invention, the device comprises at least one passage extending from a first lateral side to an opposite second lateral side of the device for promoting fibrotic development between said small bones. Optionally or alternatively, at least one of said at least one passage includes has a diameter that is at least 20% of a maximal extent of the device.

In an exemplary embodiment of the invention, the device comprises a mesh for promoting fibrotic development between said small bones. Optionally, the mesh covers a portion of an external surface of said device. Optionally, the mesh is covered by a biodegradable material.

In an exemplary embodiment of the invention, the mesh is included inside said device.

In an exemplary embodiment of the invention, a portion of the surface of said device is coated with a fibrosis promoting substance.

In an exemplary embodiment of the invention, an inflation liquid used to expand said device includes a bio-active material which is eluted though a wall of said implant. Optionally, the material comprises a fibrosis promoting substance.

In an exemplary embodiment of the invention, the device is configured to cushion between the small bones.

In an exemplary embodiment of the invention, the device comprises an annular shaped portion.

In an exemplary embodiment of the invention, the device comprises a cylindrical shaped portion.

In an exemplary embodiment of the invention, said first smooth surface is located on a proximal side of said device.

In an exemplary embodiment of the invention, said first small bone is a thumb metacarpal bone.

In an exemplary embodiment of the invention, the device comprises a distal side with a second smoothed surface on which a second small bone may slide. Optionally, said second small bone is a trapezium.

In an exemplary embodiment of the invention, the device comprises an anti-adhesive applied to the smooth surface on the proximal side and/or on the distal side to prevent bone adhesion.

In an exemplary embodiment of the invention, the device comprises a biodegradable material including PLA, PLGA, caprolactone, polycaprolactone, polydiaxone, or any combination thereof.

In an exemplary embodiment of the invention, said device is designed to rupture within a time period of 1 to 30 weeks following expansion. Optionally, said device is designed to rupture within a time period of 6 to 10 weeks following expansion.

In an exemplary embodiment of the invention, said device is designed to completely biodegrade within a time period of 3 – 30 months following expansion. Optionally, said device is designed to completely biodegrade within a time period of 6 – 12 months following expansion.

In an exemplary embodiment of the invention, the device comprises an anchor adapted for attaching said device to an articular capsule.

In an exemplary embodiment of the invention, the device comprises an anchor adapted for attaching said device to a bone.

In an exemplary embodiment of the invention, the device comprises a sleeve incorporating at least one of a seal and a valve.

In an exemplary embodiment of the invention, the device comprises said sizing comprises a diameter within a range of a factor of 0.8 to 1.2 of a diameter of said small bone adjacent said device.

In an exemplary embodiment of the invention, said sizing comprises a thickness of within the range of a factor of 0.5 to 2 of a natural distance between said small bones.

There is therefore provided in accordance with an exemplary embodiment of the invention, a method for implanting between small bones comprising:

inserting an expandable device between at least two small bones; and expanding the device.

In an exemplary embodiment of the invention, said small bones comprise bones of a human hand and/or a wrist.

In an exemplary embodiment of the invention, said small bones comprise bones of a human foot.

In an exemplary embodiment of the invention, the method comprises inserting the device through a small perforation in an articular capsule.

In an exemplary embodiment of the invention, the method comprises removing bone tissue from part of the at least two small bones to prepare a cavity between the bones. Optionally, the method comprises positioning the device inside the cavity.

In an exemplary embodiment of the invention, expanding the device comprises inflating the device with a liquid, a gas, a gel, or any combination thereof.

In an exemplary embodiment of the invention, the method comprises moving the at least two small bones relative to the device after a period of at least 3 days following implantation. Optionally, moving the at least two small bones comprises sliding the bones along surfaces of the device.

In an exemplary embodiment of the invention, the method comprises allowing the device to biodegrade. Optionally, the method comprises allowing the device to rupture within a time period of 6 to 10 weeks following implantation.

In an exemplary embodiment of the invention, the method comprises allowing the device to 100% biodegrade within a time period of 6 – 18 months following implantation.

In an exemplary embodiment of the invention, the method comprises promoting fibrotic development between the at least two small bones.

In an exemplary embodiment of the invention, the method comprises covering a portion of a surface of the device with a fibrosis promoting substance.

In an exemplary embodiment of the invention, the method comprises preventing the at least two small bones from adhering to the device.

In an exemplary embodiment of the invention, the method comprises promoting fibrotic development by covering a portion of the device with a mesh.

In an exemplary embodiment of the invention, the method comprises performing an arthroscopic surgical intervention for inserting the device between the at least two small bones.

In an exemplary embodiment of the invention, the method comprises performing a Trapezectomy for inserting the device between the at least two bones. Optionally, the Trapezectomy is a Partial Trapezectomy.

Unless otherwise defined, all technical and/or scientific terms used herein have the same meaning as commonly understood by one of ordinary skill in the art to which the invention pertains. Although methods and materials similar or equivalent to those

described herein can be used in the practice or testing of embodiments of the invention, exemplary methods and/or materials are described below. In case of conflict, the patent specification, including definitions, will control. In addition, the materials, methods, and examples are illustrative only and are not intended to be necessarily limiting.

BRIEF DESCRIPTION OF THE DRAWINGS

Some embodiments of the invention are herein described, by way of example only, with reference to the accompanying drawings. With specific reference now to the drawings in detail, it is stressed that the particulars shown are by way of example and for purposes of illustrative discussion of embodiments of the invention. In this regard, the description taken with the drawings makes apparent to those skilled in the art how embodiments of the invention may be practiced.

In the drawings:

FIGs. 1A and 1B schematically illustrate an exemplary view of the bones in the hand and an enlarged view of an area of the hand showing the thumb metacarpal and the trapezium, respectively;

FIGs. 2A – 2E schematically illustrate steps involved in replacing a CMC joint in a hand using an exemplary expandable joint implant device, according to an embodiment of the present invention;

FIGs. 3A – 3G schematically illustrate different configurations of the exemplary joint implant device, according to some embodiments of the present invention;

FIGs. 4A and 4B schematically illustrate different configurations of the exemplary joint implant device including anchoring means, according to some embodiments of the present invention;

FIG. 5 schematically illustrates another configuration of the exemplary joint implant device, according to some embodiments of the present invention;

FIG. 6 schematically illustrates a flow chart of a method for performing a CMC joint implant including the exemplary joint implant device; and

FIG. 7 schematically illustrates several views A - D of an exemplary joint implant device, according to some embodiments of the present invention.

DESCRIPTION OF EMBODIMENTS OF THE INVENTION

The present invention, in some embodiments thereof, relates to body implantable devices and, more particularly, but not exclusively, to a small bones implant device and a method for implanting between small bones.

An aspect of some embodiments of the present invention relates to an expandable implantable device configured to be implanted in between small bones, for inducing deposition of tissues between the bones. Throughout this disclosure, the "expandable implantable device" may be used interchangeably with "expandable joint implant device", “expandable cushioning device”, “expandable spacer”, "joint implant device", "expandable device", "joint device", "implant", and "device". The device may be used for partially replacing a CMC joint in a hand. Optionally, the device is used for wholly replacing the CMC joint in the hand. In some exemplary embodiments, the joint implant device may be used at other articular sites (joint areas) such as, for example, between phalanges of a hand and/or a foot, at the metatarsalphalangeal joint, between the scaphoid and the trapezoid, and at other small joints in the foot and/or the hand.

According to some embodiments, the implant is configured to substantially conform to bony surfaces in the joint area and to serve as a cushion between the bones. Optionally, the implant includes a size which matches a width of the wider bone. Optionally, the size matches a width of the narrower bone. Optionally, the implant includes a size which ranges from 50% - 90% of the width of the wider bone. Additionally or alternatively, the size ranges from 50% - 90% of the width of the narrower bone. Optionally, the implant allows relative movement of the bones while providing for tissue repair and stabilization. The implant is further configured to serve as a spacer for maintaining a separation between the bones. Optionally, length and configuration are restored to the joint substantially reducing anatomical deformation, for example, a thumb length and shape may be maintained. An advantage of using the implant over other devices known in the art is that patient rehabilitation may be initiated soon following surgical intervention, for example, within a period ranging from 1 – 14 days. Optionally, patient rehabilitation may start within a period of 1 – 3 days, 3 – 7 days, 7 – 10 days.

In some embodiments, the joint implant device may include an inflatable device such as for example, a balloon, which is inserted in a deflated state into a cavity in the joint area following a partial or complete resection of a joint surface. Once in position, the balloon may be inflated to an expanded state with a liquid, a gas, or a gel, introduced into the balloon through an inflation port. Optionally, the inflation port is located inside the balloon when in an expanded state so as to substantially prevent injury or irritation from rubbing against edges of the port. Optionally, inflation is done by temporarily attaching an inflation cannula or inflation needle to the inflation port and removing the cannula or needle when the balloon is expanded to a required size. Additionally or alternatively, the inflation port is biodegradable. Optionally, the inflation port includes a one-way valve which may be biodegradable.

In some embodiments of the present invention, an expanded size of the device may be, for example, 22mm x 20mm x 12mm. Optionally, an expanded size may be 20mm x 12mm x 8mm. Additionally or alternatively, the expanded size of the device may be such that a length of the device does not exceed 30mm, a width does not exceed 30mm, and a height does not exceed 20 mm. An expanded shape of the device may include any polyhedral shape, such as for example, rectangular, trapezoidal, cylindrical, octagonal. Optionally, the expanded shape may include a spherical shape or any curved variations of a spherical shape such as, for example, ellipsoid. A non-expanded size of the device may not exceed a length of 30mm, a width of 30mm, and a height of not more than 10mm (for example, 6mm, 4mm, 3mm or less). A wall thickness of the device may range from less than 1mm to 5mm, for example 1mm, 2mm, 3mm. A modulus of elasticity of the device may be equivalent to that of a cartilage or a tendon. Optionally, the modulus of elasticity is in a range of 30% - 150% of that of a cartilage, or a tendon. Inserting the balloon in a deflated state allows for surgical intervention involving joint arthroscopy or arthroscopic CMC joint arthroplasty, the balloon inserted through a relatively small perforation in the articular capsule. Optionally, the surgical intervention may include open surgery. Additionally or alternatively, the surgical intervention may include a full Trapezectomy or a partial Trapezectomy. Optionally, the implant may include a sponge-like device or other type of device which may be compressed for insertion and expands once positioned inside the cavity.

In some embodiments, the device may include a biodegradable material such as, for example, PLA, PLGA, polycaprolactone, polydiaxone, or other biocompatible biodegradable material, or any combination thereof, suitable for lasting a period of time in a range from 1 week to 1 year, optionally from 1 month to 4 months, optionally from 6 weeks to 12 weeks, for example 8 weeks. Additionally or alternatively, the device may include a biodegradable material such that the device ruptures within a period of 5 – 15 weeks from implantation, for example 7 – 8 weeks, the ruptured device biodegrading within a period of time ranging from 6 – 18 months from implantation, for example 9 – 14 months. Optionally, the device may include a non-biodegradable, biocompatible material such as, for example, polyethylene, polyurethane, silicon, other polymeric or non-polymeric biocompatible materials, or any combination thereof. Optionally, the device may be seamless thereby allowing an improved homogeneity in shape and/or degradation, improved structural durability to inner and/or outer stresses. More details about exemplary degradable materials and/or balloons, and ways of producing thereof, are described in US Publication No. 2008/0033471 titled "DEVICE SYSTEM AND METHOD FOR TISSUE DISPLACEMENT OR SEPARATION", the disclosure of which is fully incorporated herein by reference.

In some embodiments, the device may include a cylindrical shape and may include one or more openings (passages) extending from a first side of the device to a second opposing side of the device, for allowing fibrotic development (fibrosis) between the bones from both sides of the device (from the side of the trapezoid and the side of the metacarpal). Optionally, the passages may angularly extend from the first side to the second side. Optionally, the passages are positioned and oriented so as to achieve a desired pattern of fibrotic growth. Optionally, the passages may cover an area ranging from 10% - 50% of the total area of the first side and the second side. Creating fibrotic bridges between the bones, additionally to filling the joint area and strengthening the surrounding articular capsule, may serve to permit a full range of motion and to prevent bone shortening, for example, thumb shortening. Optionally, the device may include an internal cylindrical shape forming two concentric rings (one rings inside the other). Optionally, the external ring biodegrades before the internal ring. Optionally, the device may be star-shaped so that radial extensions may assist in promoting fibrosis. Optionally, the device may include any other shape suitable for promoting fibrosis while

allowing the device to serve as a cushion and/or spacer. Optionally, an exterior of the device may be partially or wholly covered with a mesh for promoting fibrosis, in some cases the mesh covering those areas in contact with bone and which do not interfere with movement of the bones. Optionally, such a mesh is distributed to achieve a desired pattern of fibrotic growth. Optionally, such a mesh may be covered by a biodegradable material so as to not interfere with movement of the bones while the capsule is being strengthened and only then being exposed to promote fibrosis between the bones. Additionally or alternatively, an interior of the device may include such a mesh, and may protrude through a surface of the device as the device biodegrades. Optionally, the surface of the device may be coated with a slow-release substance that promotes fibrosis such as, for example, FGF. Optionally, walls of passages are coated with the substance which promotes fibrotic development. Additionally or alternatively, walls of passages are coated with a substance which substantially inhibits fibrotic development. Optionally, the surface may be coated with an anti-inflammatory substance such as, for example, steroids and or antibiotics. Optionally, the device may include seams to promote fibrosis. Optionally, the device may be filled with a fibrosis promoting agent that may be dispersed into the surrounding when the device ruptures and/or at least partially degrades.

In some embodiments, the opposing first and second sides of the device may include at least one smooth surface for allowing movement of the bones relative to the device, including sliding along the surface. For example, the first (thumb) metacarpal may move along the surface of the first side (distal side) of the device, and the device may move with respect to the trapezium along the surface of its opposing side (proximal side). Optionally, the surface may be coated with a substance which substantially prevents bone adherence. Optionally, such a substance enhances sliding of a bone on the surface. Optionally, the surface may include a substance which substantially prevents sliding of a bone over the surface.

In some embodiments of the present invention, the device may include a shape resembling a "dumbbell" including two expanded ends joined together by a connecting portion so that movement in the joint area is transmitted to each end of the device while substantially maintaining movement between the bones and the surfaces of the device to a minimum (reducing wear on the bones and possible pain). In this case, at least one of

the surfaces in contact with a bone is coarse or rough thereby minimizing a relative movement of the surface with respect to the bone and allowing a transfer of movement to the connecting portion.

In some embodiments of the present invention, the device may include anchoring means (anchor) for substantially preventing dislodgement of the device during movements within the articulation. The anchor may be located on a palmar side of the device and may be attached to the articulate capsule. Optionally, the anchor may be positioned on the device at an angle not less than 30 degrees from the inflation port. Optionally, the anchor may be arrow-shaped and is configured to pierce into the palmar capsule where it may be embedded. Optionally, the anchor may include a hook for securing the attachment to the capsule or to bone. Optionally, the anchor may be adhered to the bone or to the articular capsule by means of an adhesive. Optionally, the adhesive is biodegradable. Additionally or alternatively, the anchor may be inflatable and is inflated together with the rest of the device via the inflation port. Optionally, the anchor includes a separate inflation port and is inflated following attachment to the capsule (or the bone). Optionally, a same inflation port includes separate conduits for inflating the device and the anchor. Optionally, the anchor is an integral extension of the device and is of a same material as the device. Optionally, the anchor is a separate extension of the device, and may or may not, be of a same material as the device.

An aspect of some embodiments of the present invention relates to a method for implanting an expandable device in between at least two small bones using minimal invasive surgery such as, for example, arthroscopic intervention. In an exemplary embodiment, the method includes perforating a small hole in an articular capsule; removing bone tissue from part of the at least two small bones to form a cavity; inserting the device in a non-expanded state into the cavity and expanding the device to a size where the device may serve both as a cushion and a spacer in between the at least two bones; and starting patient rehabilitation after a period ranging from 1 – 14 days. Optionally, patient rehabilitation may start within a period of 1 – 3 days, 3 – 7 days, 7 – 10 days.

For purposes of better understanding some embodiments of the present invention, reference is first made to FIGURES 1A and 1B which schematically illustrate

an exemplary view of the bones in the hand **100** and an enlarged view of an area of the hand showing the thumb metacarpal **102** and the trapezium **104**, respectively.

Before explaining at least one embodiment of the invention in detail, it is to be understood that the invention is not necessarily limited in its application to the details of construction and the arrangement of the components and/or methods set forth in the following description and/or illustrated in the drawings. The invention is capable of other embodiments or of being practiced or carried out in various ways.

Before explaining at least one embodiment of the invention in detail, it is to be understood that the invention is not necessarily limited in its application to the details set forth in the following description. The invention is capable of other embodiments or of being practiced or carried out in various ways.

Referring now to the drawings, FIGURES 2A – 2E schematically illustrate steps included in treating a CMC joint in a hand **200** using an exemplary expandable joint spacer implant device **212**, according to an embodiment of the present invention. Optionally, the treated joint is in another articular site, for example, elsewhere in hand **200** or in a foot (not shown).

Figure 2A shows a portion of base **206** of thumb metacarpal **202** and a portion of inferior surface **208** of trapezium **204** cut so as to facilitate access to a joint area **201**.

Figure 2B shows a cavity **210** formed in joint area **201** by cutting portions of base **206** and inferior surface **208**, the cavity configured to receive implant **212**.

Figure 2C shows implant **212** in a non-expanded state and positioned inside cavity **210** in joint area **201**, between base **206** and inferior surface **208**. Optionally, implant **212** is in a compressed state or in a deflated state.

Implant **212** may include a balloon or similar inflatable device; a sponge-like device; or any other expandable device suitable to be inserted in a compressed state, or a deflated state into cavity **210** through a relatively small perforation in the articular capsule. Implant **212** may include a biocompatible and/or a biodegradable material. Biocompatible materials may include, for example, polyethylene, polyurethane, silicon, or other biocompatible polymeric or non-polymeric materials, or any combination thereof. Biodegradable materials may include, for example, PLA, PLGA, polycaprolactone, polydiaxone or other biodegradable material, or any combination thereof, suitable for degrading within a period of any predetermined window of time,

optionally between 6 – 12 weeks from insertion into cavity **210**, for example, optionally within 8 weeks. Optionally, device **212** may be similar to those devices shown in Figures 3A – 5 described further on below.

Implant **212** may include an inflation port **214** through which an expansion fluid, which may be a liquid, a gas, or a gel, may be introduced to inflate the device. The expansion fluid may be a biocompatible fluid, and/or a biodegradable fluid. For example, the liquid may be a 0.9% saline, a Ringer solution or a Hartman solution. The gel may be, for example, an absorbable haemostatic agent such as gelatin, cellulose, or bovine collagen, or a biodegradable synthetic adhesive such as poly ethylene glycol (PEG). The gas may be for example, oxygen, nitrogen, or any other gas readily absorbed by the human body, or any combination thereof.

Figure 2D shows implant **212** is in an expanded (inflated) state, following introducing of the expansion fluid into the device through inflation port **214**. Inflation port **214** is not visible as the port is inside device **212** following inflation of the device.

Inflation of implant **212** is done by temporarily attaching an inflation cannula, optionally an inflation needle, to inflation port **214**, and injecting the expansion fluid into the device. Once device **212** is expanded to the appropriated size, inflation port **214** is sealed and the inflation cannula removed.

Once expanded to the appropriate size, device **212** optionally fills cavity **210** and optionally conforms to the shape of the cavity, including the reshaped portions of base **206** and inferior surface **208**. In the expanded state, implant **212** serves as a cushion and/or a spacer between thumb metacarpal **202** and trapezium **204**. Optionally, device **212** includes holes for promoting fibrotic development between thumb metacarpal **202** and trapezium **204**. Optionally, a contour of device **212** is suitable for promoting fibrotic development, for example by including extensions such as radial extensions in a starred shape. Additionally or alternatively, device **212** may include a mesh for promoting fibrotic development or may be coated with a fibrosis promoting substance such as, for example, FGF. Optionally, device **212** may include a coating of an anti-inflammatory substance such as, for example, steroids and/or antibiotics. Optionally, device **212** may include a seam, which may optionally assist to promote fibrosis. Optionally, device **212** may be seamless.

In the expanded state, device **212** may be configured to allow thumb metacarpal **202** to slide along a distal side of the device abutting with base **206**, and for the device to slide relative to trapezium **204** along a proximal side of the device abutting inferior surface **208**. Optionally, device **212** slides relative to thumb metacarpal **202** and/or to trapezium **204**.

Device **212** may optionally include an anchor **216** for substantially preventing possible dislodgement of the device from within cavity **210** when expanded. Anchor **216** may be attached to the articular capsule or to a bone, for example, to the scaphoid below the trapezium or to the trapezoid next to the trapezium.

Figure 2E shows joint area 201 following biodegradation of implant **212** and a fibrotic bridge **213** formed between thumb metacarpal and trapezium **204** (synfibrosis). Fibrotic bridge **213** filled joint area **201** and strengthened the surrounding articular capsule. Due to an optional continuous relative movement of metacarpal **202** and trapezium **204** therebetween and with respect to implant **212**, a complete bone fusion is substantially prevented and a synfibrosis, a synarthrosis or a synostosis is optionally formed in the space previously occupied by implant **212**, allowing at least partial movement of thumb metacarpal **202** with respect to trapezium **204**.

Reference is now also made to FIGURES 3A – 3G which schematically illustrate different, non-limiting, configurations of an exemplary joint implant device, according to some embodiments of the present invention. The implants shown at **300**, **310**, **320**, **330**, **340**, and **350** may be similar to that shown in FIGURES 2C and 2D at **212**. The embodiments shown are not intended to be limiting in any form, and it should be evident to an ordinary person skilled in the art that many other configurations (including device shapes, hole shapes, extensions, etc.) may be used.

FIGURES 3A and 3B show a perspective view of implant **300** and a layout view of the implant. Implant **300** includes a torus (optionally cylindrical) shape with an opening **302** (passage) extending through the device ("donut-shaped") for promoting fibrotic development through the opening from a direction from both thumb metacarpal **202** and trapezium **204**. Optionally, opening **302** which is shown with a circular shape may include other shapes, for example rectangular, triangular, star-shaped, an 8 – shape, or other polygonal shapes. Optionally, proximal side **301** and distal side **303** may include a coating of a slow-release substance for promoting fibrosis, and/or with an anti-

inflammatory substance such as, for example, a steroid or an antibiotic. Optionally, proximal side **301** and/or distal side **303** may be treated with a substance to prevent bone adhesion. Additionally or alternatively, the substance may enhance bone movement along the surfaces. Implant **300** is inserted into cavity **210** in a deflated mode and is positioned so that thumb metacarpal **202** abuts distal side **303** of the device when expanded and trapezium **204** abuts proximal side **301**. Both distal side **303** and proximal side **301** include a smooth surface for allowing relative movement of thumb metacarpal **202** and trapezium **204** with respect to device **300**. Implant **300** includes an inflation port **304** to which an inflation cannula or needle may be attached for introducing expansion fluid into the device.

FIGURE 3C shows a layout view of implant **310**. Implant **310** includes a cylindrical shape with a plurality of openings **312** (passages) extending through the device for promoting fibrotic development through the openings from a direction from both thumb metacarpal **202** and trapezium **204**. Optionally, opening **312** which is shown with a circular shape may include other shapes, for example rectangular, triangular, star-shaped, an 8-shape, or other polygonal shape, or any combination thereof. Optionally, proximal side **311** and distal side **313** may include a coating of a slow-release substance for promoting fibrosis, and/or with an anti-inflammatory substance such as, for example, a steroid or an antibiotic. Optionally, proximal side **311** and/or distal side **313** may be treated with a substance to prevent bone adhesion. Additionally or alternatively, the substance may enhance bone movement along the surfaces Implant **310** is inserted into cavity **210** in a deflated mode and is positioned so that thumb metacarpal **202** abuts distal side **313** of the device when expanded and trapezium **204** abuts proximal side **311**. Both distal side **313** and proximal side **311** include a smooth surface for allowing relative movement of thumb metacarpal **202** and trapezium **204** with respect to device **310**. Implant **310** includes an inflation port **314** to which an inflation cannula or needle may be attached for introducing expansion fluid into the device.

FIGURE 3D shows a layout view of implant **320**. Implant **320** includes a starred shape including radial extensions for promoting fibrotic development through the extensions from both thumb metacarpal **202** and trapezium **204**. Optionally, proximal side **321** and distal side **323** may include a coating of a slow-release substance for promoting fibrosis, and/or with an anti-inflammatory substance such as, for example, a

steroid or an antibiotic. Optionally, proximal side **321** and/or distal side **323** may be treated with a substance to prevent bone adhesion. Additionally or alternatively, the substance may enhance bone movement along the surfaces. Optionally, implant **320** may include one or more passages extending directly or angularly from proximal side **321** to distal side **323**. Implant **320** is inserted into cavity **210** in a deflated mode and is positioned so that thumb metacarpal **202** abuts distal side **323** of the device when expanded and trapezium **204** abuts proximal side **321**. Both distal side **323** and proximal side **321** include a smooth surface for allowing relative movement of thumb metacarpal **202** and trapezium **204** with respect to device **320**. Implant **320** includes an inflation port **324** to which an inflation cannula or needle may be attached for introducing expansion fluid into the device.

FIGURE 3E shows a layout view of implant **330** which includes a cylindrical shape. Implant **330** is inserted into cavity **210** in a deflated mode and is positioned so that thumb metacarpal **202** abuts a distal side **333** of the device when expanded and trapezium **204** abuts a proximal side **331**. Both distal side **333** and proximal side **331** include a smooth surface for allowing relative movement of thumb metacarpal **202** and trapezium **204** with respect to device **330**. Optionally, proximal side **331** and distal side **331** may include a coating of a slow-release substance for promoting fibrosis, and/or with an anti-inflammatory substance such as, for example, a steroid or an antibiotic. Optionally, proximal side **331** and/or distal side **333** may be treated with a substance to prevent bone adhesion. Additionally or alternatively, the substance may enhance bone movement along the surfaces. Implant **330** includes an inflation port **334** to which an inflation cannula or needle may be attached for introducing expansion fluid into the device.

FIGURE 3F shows a layout view of implant **340**. Implant **340** includes a mesh **346** covering a portion, optionally a whole, of a proximal side **341** and/or a distal side **343** of the implant for promoting fibrotic development from both thumb metacarpal **202** and trapezium **204**. Optionally, only portions of proximal side **341** and/or distal side **343** not in contact with moving bones are covered by the mesh. Additionally or alternatively, mesh **346** is covered by a biodegradable material which exposes the mesh only after a period of time during which the articular capsule is strengthened, for promoting fibrosis between thumb metacarpal **202** and trapezium **204**. The material provides both distal

side **343** and proximal side **341** with a smooth surface for allowing relative movement of thumb metacarpal **202** and trapezium **204** with respect to device **340**. Optionally, the material prevents bone adhesion. Optionally, proximal side **341** and distal side **343** may include a coating of a slow-release substance for promoting fibrosis, and/or with an anti-inflammatory substance such as, for example, a steroid or an antibiotic. Implant **340** is inserted into cavity **210** in a deflated mode and is positioned so that thumb metacarpal **202** abuts distal side **343** of the device when expanded and trapezium **204** abuts proximal side **341**. Implant **340** includes an inflation port **344** to which an inflation cannula or needle may be attached for introducing expansion fluid into the device.

FIGURE 3G shows a layout view of implant device **350** including a mesh **356** inside the device for promoting fibrotic development from both thumb metacarpal **202** and trapezium **204**. Device **350** may be similar to device **340** with the exception that mesh **356** is internally located in the expandable portion of the device, and protrudes through a surface of the device as the device biodegrades. Optionally, mesh **356** is exposed once a major portion of device **350**, or optionally a whole of the device, biodegrades.

Reference is now also made to FIGURES 4A and 4B which schematically illustrate different, non-limiting configurations of the exemplary joint implant device including anchoring means, according to some embodiments of the present invention. The implants, shown at **400** and **410,** may be similar to that shown in FIGURES 2C and 2D at **212,** or FIGURES 3A – 3G at **300**, **310**, **320**, **330**, **340**, or **350,** respectively**,** with a difference that implants **400** and **410** include an anchor **406** and **416** respectively . The embodiments shown are not intended to be limiting in any form, and it should be evident to an ordinary person skilled in the art that many other configurations (including device shapes, hole shapes, extensions, etc.) may be used.

Anchor **406** in FIGURE 4A and anchor **416** in FIGURE 4B are configured to substantially prevent dislodgement of device **400** and **410** respectively, during movements within cavity **210**. Anchors **406** and **416** may be located on a palmar side of device **400** and **410**, respectively, and may be attached to the articulate capsule. Optionally, as shown in FIGURE 4A, anchor **406** may be arrow-shaped and is configured to pierce into the palmar capsule where it may be embedded. Optionally, as shown in FIGURE 4B, anchor **416** may include a hook for securing the attachment to

the capsule or to bone. Optionally, anchor **416** may include an arrow-shaped head to facilitate piercing of the capsule prior to attachment of the hooks. Additionally or alternatively, anchor 406 and/or 416 is attached to the articular capsule or the bone by means of a biodegradable adhesive.

According to some embodiments, anchors **406** and/or **416** may be inflatable and may be inflated together with the expansive portion (inflatable portion) of device **400** and **410** via inflation ports **404** and **414**, respectively. Optionally, anchors **406** and/or **416** may include separate inflation ports and may be inflated following attachment to the capsule (or the bone). Optionally, inflation ports **404** and/or **414** include separate conduits for inflating the device and the anchor. Optionally, anchors **406** and/or **416** may be an integral extension of device **400** and/or **410**, respectively, and of a same material as the device. Optionally, **406** and/or **416** may be a separate extension of device **400** and/or **410**, respectively, and may or may not be of a same material as the device. Optionally, anchors **406** and/or **416** are made of a biocompatible and/or biodegradable material.

Reference is now also made to FIGURE 5 which schematically illustrates another configuration of an exemplary joint implant device **500**, according to some embodiments of the present invention. Implant **500** may be similar to that shown in FIGURES 2C and 2D at **212,** or FIGURES 3A – 3G at **300**, **310**, **320**, **330**, **340**, or **350,** respectively**,** or FIGURES 4A or 4B at **400** or **410**, respectively with a difference that implant **500** includes a "dumbbell" shape.

Implant **500**, when expanded, includes two relatively large expanded end sections **505** joined together by a relatively narrower connecting portion **503**. Inflation of end sections **505** and connecting portion **503** is by means of an expansion fluid introduced through inflation port **504**, as previously described for other embodiments. Optionally, connecting portion **503** is a non-inflatable element of a suitable size to be inserted into cavity **210** with end sections **505** deflated. Implant **500** is configured to substantially restrain movement of thumb metacarpal **202** and trapezium **204** relative to the implant. Movement between the two bones is through connecting portion **503**, which acts as a joint, with movement of each bone transmitted to end sections **505** which act as supports.

Reference is now made to FIGURE 6 which schematically illustrates a flow chart of a method for performing a CMC joint implant including exemplary joint implant device **212**. Optionally, any of the devices **300**, **310**, **320**, **330**, **340**, **350**, **400**, **410**, or **500** may be used for implementing the method. The method described below is not intended to be limiting in any way and it should be evident to an ordinary person skilled in the art that there may be many other ways of implementing the method, including, for example, using different steps, a different order of the steps, skipping steps, inserting steps.

Optionally at **601**, a partial trapezectomy is to be performed using arthroscopy. A hole is perforated in the articular capsule and a portion of base **206** in thumb metacarpal **202** is cut. A portion of inferior surface **208** in trapezium **204** is also cut, both cuts to facilitate access to joint area **201** to prepare cavity **210**. Optionally, a full trapezectomy may be performed wherein trapezium **204** is completely removed. Optionally, the partial trapezectomy may be removed using open surgery.

Optionally at **602**, base **206** and inferior surface **208** are further cut and shaped to form cavity **210** in joint area **201**. Cavity **210** is of a size to allow non-expanded device **212** to be inserted into the cavity and positioned such that, when expanded, will act as a cushion and/or spacer between thumb metacarpal **202** and trapezium **204**. Optionally, expanded device **212** is secured within cavity **210** any may not be dislodged through the hole in the articular cavity. Cavity **210** shall also allow for device **212** to be positioned such that there is relatively easy access to inflation port **214** for expanding the device and for sealing the inflation port once the device is expanded.

Optionally at **603**, implant **212** is inserted into cavity **210**. An inflation cannula which may include an inflation needle for connecting to inflation port **214** may be configured to clasp device **212** at a distal end, for positioning the device inside cavity **210**. Optionally, device **212** may be rolled on a distal end of the inflation cannula in a deflated state for inserting in cavity **210**. Optionally, other methods known in the art for placing implants using arthroscopy may be used.

Optionally at **604**, an expansion fluid is injected through the inflation cannula into inflation port **214**. The expansion fluid may include a liquid, a gas, or a gel, or any combination thereof. Device **212** is expanded to cover a portion, optionally a whole, of cavity **210** forming a cushion and/or spacer between thumb metacarpal **202** and

trapezium **204**. Device **212** partially, optionally wholly, conforms to a shape of the bone surfaces of base **206** and inferior surface **208**. Once expanded to the desired length, inflation port **214** may be sealed. Optionally, inflation cannula may be detached from device **212** and extracted from the articular capsule. Optionally, the inflation cannula is not extracted for possible use in attaching anchor **216** and/or for performing other arthroscopic operations.

Optionally at **605**, anchor **216** may be attached to the articulate capsule. Optionally, anchor **216** may be attached to a bone, for example, to the scaphoid located below the trapezium or to the trapezoid located next to the trapezium.

Optionally at **606**, the perforation in the articular capsule is closed and the arthroscopic procedure is finalized. Patient may start rehabilitation after a period ranging from 1 – 14 days. Optionally, patient rehabilitation may start within a period of 1 – 3 days, 3 – 7 days, 7 – 10 days. Optionally, device **212** may include a biodegradable material such that the device ruptures within a period of 5 – 15 weeks from implantation, for example 7 – 8 weeks. During this time the articular capsule is strengthened and limited fibrotic development occurs around and through the device. Optionally, the ruptured device biodegrades within a period of time ranging from 6 – 18 months from implantation, for example 9 – 14 months, during which time substantially complete fibrotic development occurs.

Reference is now also made to FIGURE 7 which schematically illustrates several views A - D of an exemplary joint implant device **700**, according to some embodiments of the present invention. Implant **700** may be similar to that shown in FIGURES 2C and 2D at **212,** or FIGURES 3A – 3G at **300**, **310**, **320**, **330**, **340**, or **350,** respectively**,** or FIGURES 4A or 4B at **400** or **410**, respectively. The exemplary embodiment shown herein is not intended to be limiting in any form, and it should be evident to an ordinary person skilled in the art that many other configurations (including device shapes, hole (passage) shapes, number of passages , etc.) may be used for inplant **700**.

Views A and B show a perspective view of implant **700,** view C shows a layout view of the implant, and view D shows a sectional view of the implant, according to an exemplary embodiment. Implant **700** which may include a shape as shown includes an opening **704** (passage) extending through the device for promoting fibrotic development through the opening from a direction from both thumb metacarpal **202** and trapezium

204. Optionally, passage **704** which is shown with a circular shape may include other shapes, for example rectangular, triangular, star-shaped, an 8 – shape, or other polygonal shapes. Passage **704** is optionally distally positioned from a one-way inflation valve **706** included inside an inflation port **702** substantially limiting possible damage to the device due to the insertion pressure of an expansion fluid. An inflation cannula and/or needle may be attached to inflation port **702** and inflation valve **706** for introducing the expansion fluid into the device. Optionally, inflation port **702** includes a biodegradable material. Optionally, inflation valve includes a biodegradable material.

According to some embodiments, proximal side **701** and distal side **703** may include a coating of a slow-release substance for promoting fibrosis, and/or with an anti-inflammatory substance such as, for example, a steroid or an antibiotic. Optionally, proximal side **701** and/or distal side **703** may be treated with a substance to prevent bone adhesion. Additionally or alternatively, the substance may enhance bone movement along the surfaces. Implant **700** is inserted into cavity **210** in a deflated mode and is positioned so that thumb metacarpal **202** abuts distal side **703** of the device when expanded and trapezium **704** abuts proximal side **701**. Both distal side **703** and proximal side **701** include a smooth surface for allowing relative movement of thumb metacarpal **202** and trapezium **204** with respect to device **700**

The terms "comprises", "comprising", "includes", "including", "having" and their conjugates mean "including but not limited to". This term encompasses the terms "consisting of" and "consisting essentially of".

The phrase "consisting essentially of" means that the composition or method may include additional ingredients and/or steps, but only if the additional ingredients and/or steps do not materially alter the basic and novel characteristics of the claimed composition or method.

As used herein, the singular form "a", "an" and "the" include plural references unless the context clearly dictates otherwise. For example, the term "a compound" or "at least one compound" may include a plurality of compounds, including mixtures thereof.

The word "exemplary" is used herein to mean "serving as an example, instance or illustration". Any embodiment described as "exemplary" is not necessarily to be

construed as preferred or advantageous over other embodiments and/or to exclude the incorporation of features from other embodiments.

The word "optionally" is used herein to mean "is provided in some embodiments and not provided in other embodiments". Any particular embodiment of the invention may include a plurality of "optional" features unless such features conflict.

Throughout this application, various embodiments of this invention may be presented in a range format. It should be understood that the description in range format is merely for convenience and brevity and should not be construed as an inflexible limitation on the scope of the invention. Accordingly, the description of a range should be considered to have specifically disclosed all the possible subranges as well as individual numerical values within that range. For example, description of a range such as from 1 to 6 should be considered to have specifically disclosed subranges such as from 1 to 3, from 1 to 4, from 1 to 5, from 2 to 4, from 2 to 6, from 3 to 6 etc., as well as individual numbers within that range, for example, 1, 2, 3, 4, 5, and 6. This applies regardless of the breadth of the range.

Whenever a numerical range is indicated herein, it is meant to include any cited numeral (fractional or integral) within the indicated range. The phrases "ranging/ranges between" a first indicate number and a second indicate number and "ranging/ranges from" a first indicate number "to" a second indicate number are used herein interchangeably and are meant to include the first and second indicated numbers and all the fractional and integral numerals therebetween.

As used herein the term "method" refers to manners, means, techniques and procedures for accomplishing a given task including, but not limited to, those manners, means, techniques and procedures either known to, or readily developed from known manners, means, techniques and procedures by practitioners of the chemical, pharmacological, biological, biochemical and medical arts.

As used herein, the term "treating" includes abrogating, substantially inhibiting, slowing or reversing the progression of a condition, substantially ameliorating clinical or aesthetical symptoms of a condition or substantially preventing the appearance of clinical or aesthetical symptoms of a condition.

It is appreciated that certain features of the invention, which are, for clarity, described in the context of separate embodiments, may also be provided in combination in a single embodiment. Conversely, various features of the invention, which are, for brevity, described in the context of a single embodiment, may also be provided separately or in any suitable subcombination or as suitable in any other described embodiment of the invention. Certain features described in the context of various embodiments are not to be considered essential features of those embodiments, unless the embodiment is inoperative without those elements.

Although the invention has been described in conjunction with specific embodiments thereof, it is evident that many alternatives, modifications and variations will be apparent to those skilled in the art. Accordingly, it is intended to embrace all such alternatives, modifications and variations that fall within the spirit and broad scope of the appended claims.

All publications, patents and patent applications mentioned in this specification are herein incorporated in their entirety by reference into the specification, to the same extent as if each individual publication, patent or patent application was specifically and individually indicated to be incorporated herein by reference. In addition, citation or identification of any reference in this application shall not be construed as an admission that such reference is available as prior art to the present invention. To the extent that section headings are used, they should not be construed as necessarily limiting.

WHAT IS CLAIMED IS:

1. A soft, expandable, implantable device sized for spacing between small bones comprising a first smooth surface on which a first small bone may slide.

2. A device according to claim 1, wherein said device is biodegradable in the body.

3. The device of claim 1 or claim 2 wherein said small bones comprise bones of a human hand.

4. The device of claim 1 or claim 2 wherein said small bones comprise bones of a human foot.

5. The device of claim 3 wherein said small bones comprise at least one of a trapezium, a trapezoid bone, a metacarpal bone, and a scaphoid bone.

6. The device of any of the preceding claims comprising an inflation port for inflating said device.

7. The device of any of the preceding claims comprising at least one passage extending from a distal side to a proximal side of the device for promoting fibrotic development between said small bones.

8. The device of any of the preceding claims comprising at least one passage extending from a first lateral side to an opposite second lateral side of the device for promoting fibrotic development between said small bones.

9. The device of claim 7 or claim 8, wherein at least one of said at least one passage includes has a diameter that is at least 20% of a maximal extent of the device.

10. The device of any of the preceding claims comprising a mesh for promoting fibrotic development between said small bones.

11. The device of claim 10 wherein the mesh is included inside said device.

12. The device of claim 10 wherein a portion of the surface of said device is coated with a fibrosis promoting substance.

13. The device of any of the preceding claims wherein an inflation liquid used to expand said device includes a bio-active material which is eluted though a wall of said implant.

14. The device of any of the preceding claims configured to cushion between the small bones.

15. The device of any of the preceding claims comprising an annular shaped portion.

16. The device of any of claims 1-14 comprising a cylindrical shaped portion.

17. The device of any of the preceding claims, wherein said first smooth surface is located on a proximal side of said device.

18. The device of any of the preceding claims, wherein said first small bone is a thumb metacarpal bone.

19. The device of claim 17 comprising a distal side with a second smoothed surface on which a second small bone may slide.

20. The device of claim 19, wherein said second small bone is a trapezium.

21. The device of any of the preceding claims comprising an anti-adhesive applied to the smooth surface on the proximal side and/or on the distal side to prevent bone adhesion.

22. The device of any of the preceding claims comprising a biodegradable material including PLA, PLGA, caprolactone, polycaprolactone, polydiaxone, or any combination thereof.

23. The device of any of the preceding claims wherein said device is designed to rupture within a time period of 1 to 30 weeks following expansion.

24. The device of claim 23 wherein said device is designed to rupture within a time period of 6 to 10 weeks following expansion.

25. The device of any of the claims 1-22, wherein said device is designed to completely biodegrade within a time period of 3 – 30 months following expansion.

26. The device of claim 25 wherein said device is designed to completely biodegrade within a time period of 6 – 12 months following expansion.

27. The device of any of the preceding claims comprising an anchor adapted for attaching said device to an articular capsule.

28. The device of any of the preceding claims comprising an anchor adapted for attaching said device to a bone.

29. The device of any of the preceding claims comprising a sleeve incorporating at least one of a seal and a valve.

30. The device of any of the preceding claims wherein said sizing comprises a diameter within a range of a factor of 0.8 to 1.2 of a diameter of said small bone adjacent said device.

31. The device of any of the preceding claims wherein said sizing comprises a thickness of within the range of a factor of 0.5 to 2 of a natural distance between said small bones.

32. A method for implanting between small bones comprising:

inserting an expandable device between at least two small bones; and
expanding the device.

33. The method of claim 32 wherein said small bones comprise bones of a human hand and/or a wrist.

34. The method of claim 32 wherein said small bones comprise bones of a human foot.

35. The method of claim 32 comprising inserting the device through a small perforation in an articular capsule.

36. The method of claim 32 comprising removing bone tissue from part of the at least two small bones to prepare a cavity between the bones.

37. The method of claim 36 comprising positioning the device inside the cavity.

38. The method of claim 32 wherein expanding the device comprises inflating the device with a liquid, a gas, a gel, or any combination thereof.

39. The method of claim 32 comprising moving the at least two small bones relative to the device after a period of at least 3 days following implantation.

40. The method of claim 39 wherein moving the at least two small bones comprises sliding the bones along surfaces of the device.

41. The method of claim 32 comprising allowing the device to biodegrade.

42. The method of claim 41 comprising allowing the device to rupture within a time period of 6 to 10 weeks following implantation.

43. The method of claim 32 comprising allowing the device to 100% biodegrade within a time period of 6 – 18 months following implantation.

44. The method of claim 32 comprising promoting fibrotic development between the at least two small bones.

45. The method of claim 32 comprising covering a portion of a surface of the device with a fibrosis promoting substance.

46. The method of claim 32 comprising preventing the at least two small bones from adhering to the device.

47. The method of claim 32 comprising promoting fibrotic development by covering a portion of the device with a mesh.

48. The method of claim 32 comprising performing an arthroscopic surgical intervention for inserting the device between the at least two small bones.

49. The method of claim 32 comprising performing a Trapezectomy for inserting the device between the at least two bones.

50. The method of claim 49 wherein the Trapezectomy is a Partial Trapezectomy.

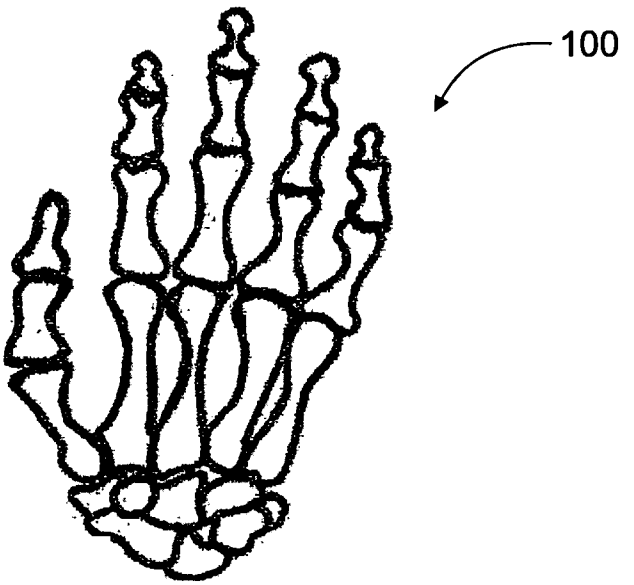
100

FIG. 1A

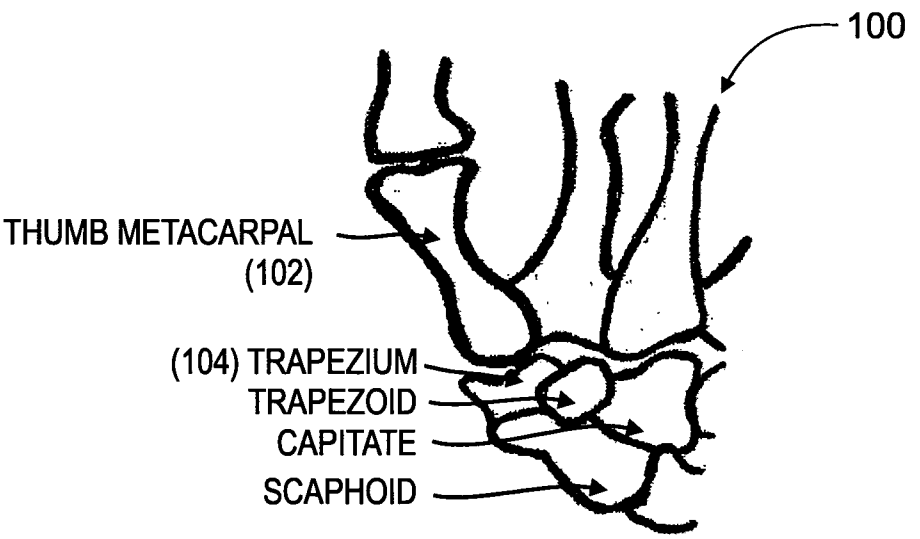
100
THUMB METACARPAL
(102)
(104) TRAPEZIUM
TRAPEZOID
CAPITATE
SCAPHOID

FIG. 1B

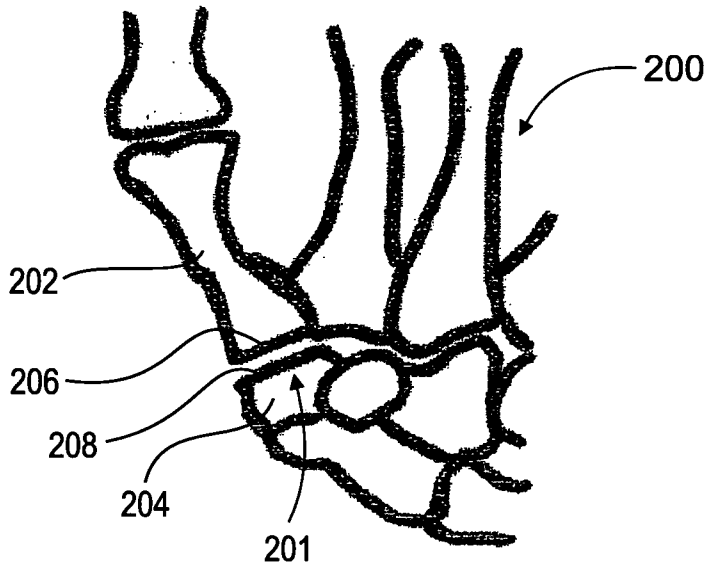

FIG. 2A

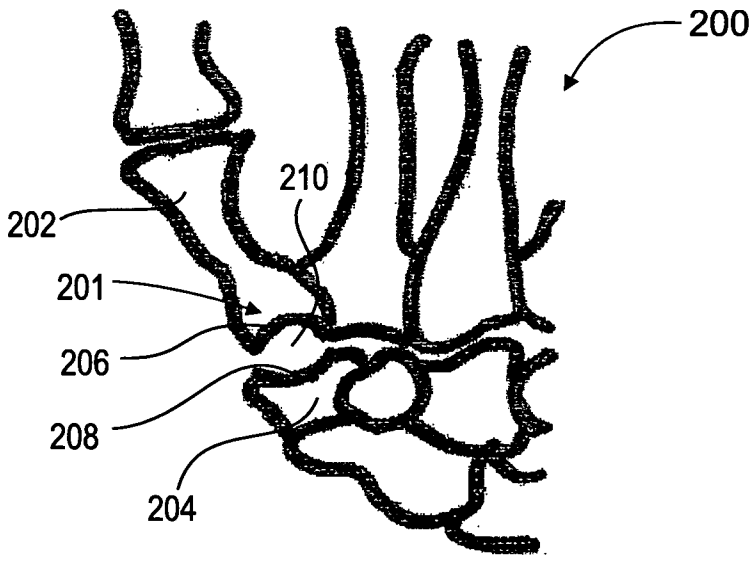

FIG. 2B

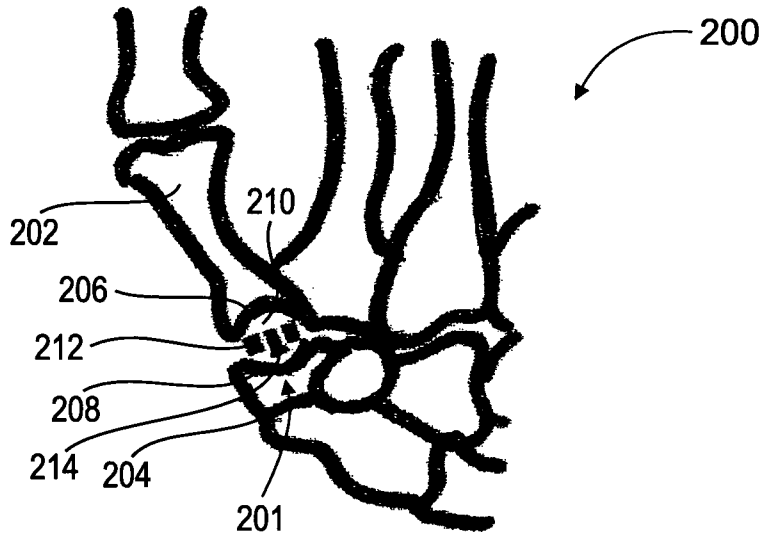
200
210
202
206
212
208
214
204
201

FIG. 2C

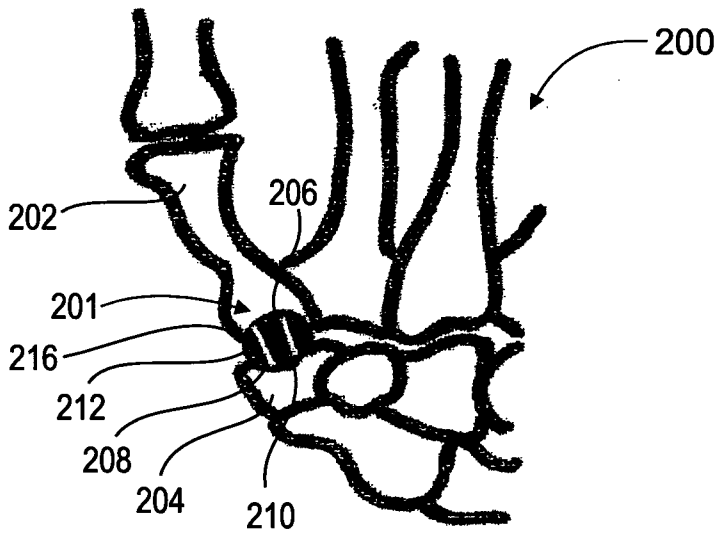
200
206
202
201
216
212
208
204
210

FIG. 2D

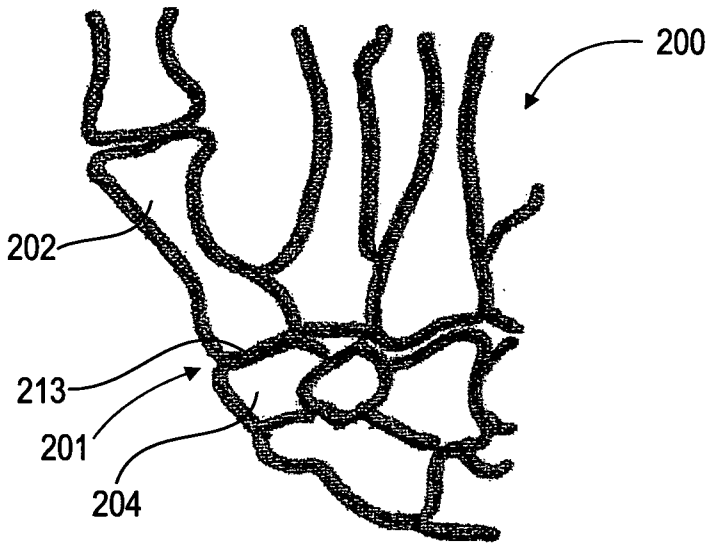

FIG. 2E

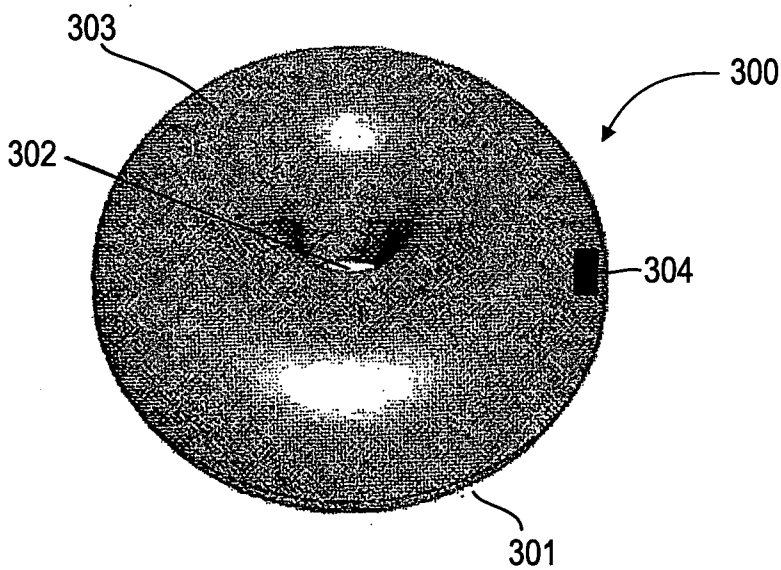

FIG. 3A

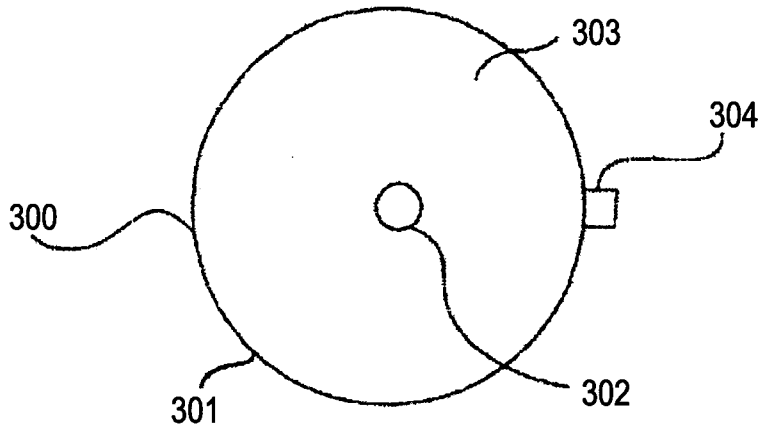

FIG. 3B

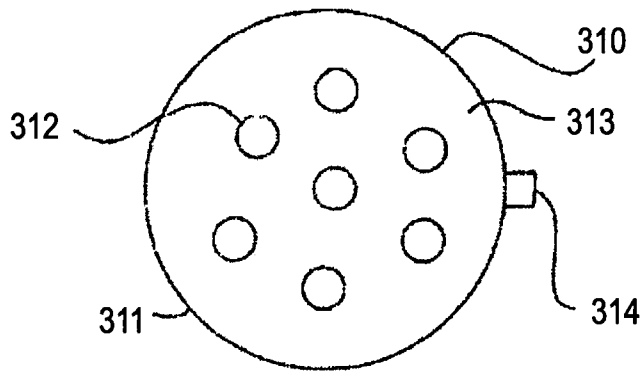

FIG. 3C

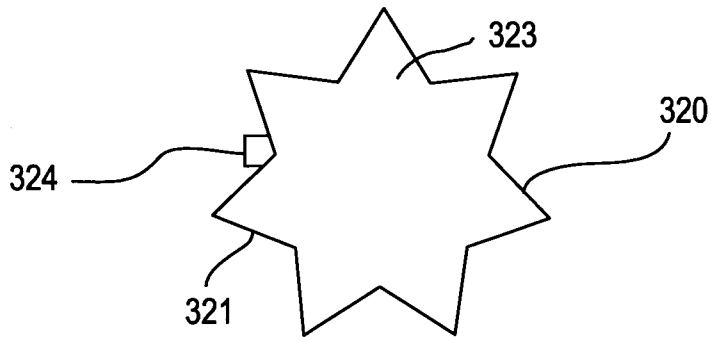

FIG. 3D

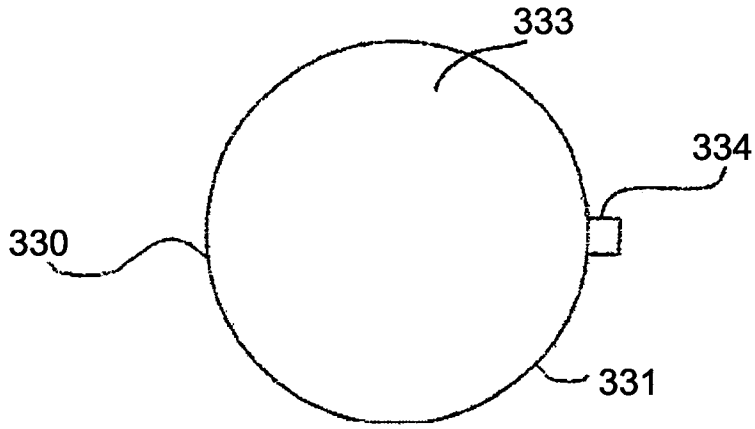

FIG. 3E

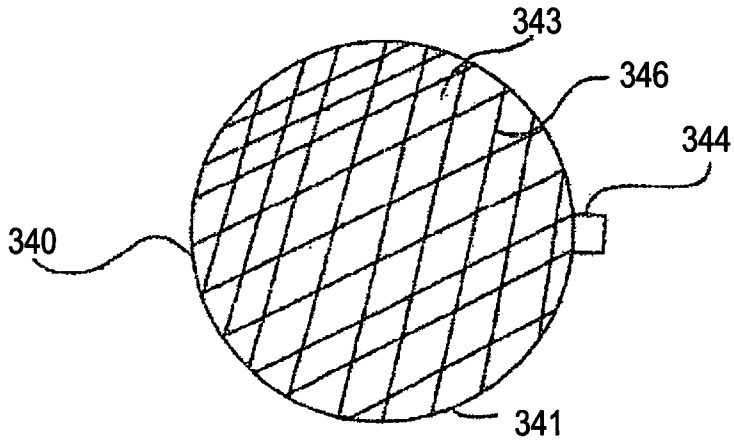

FIG. 3F

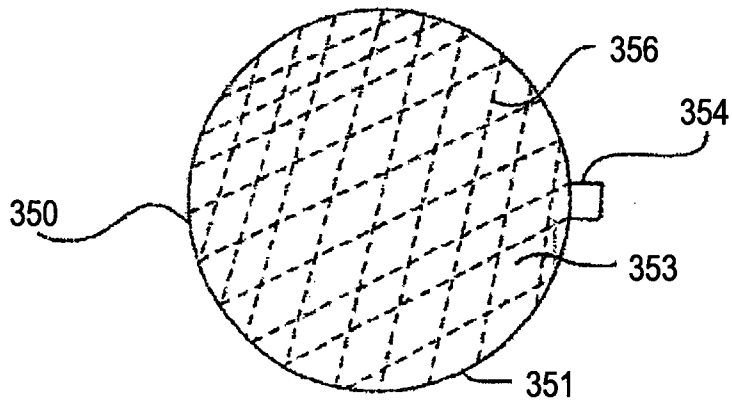

FIG. 3G

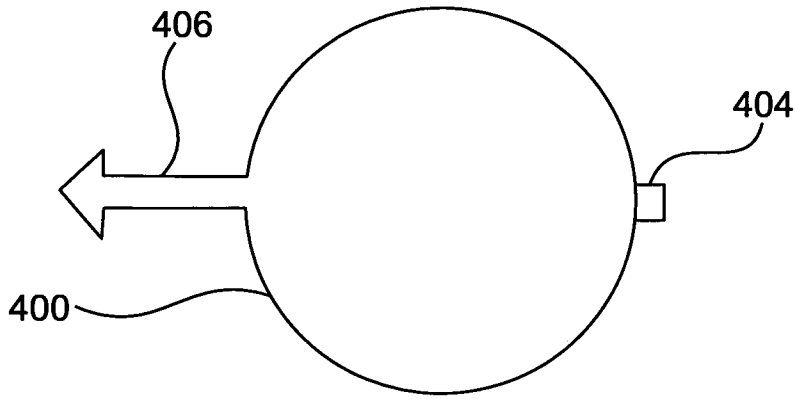

FIG. 4A

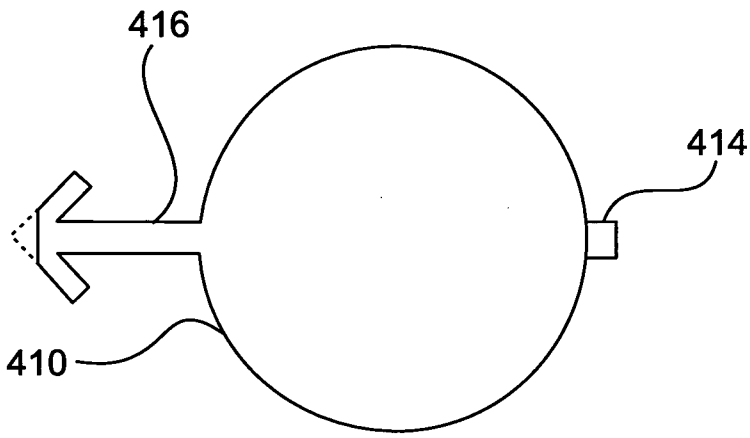

FIG. 4B

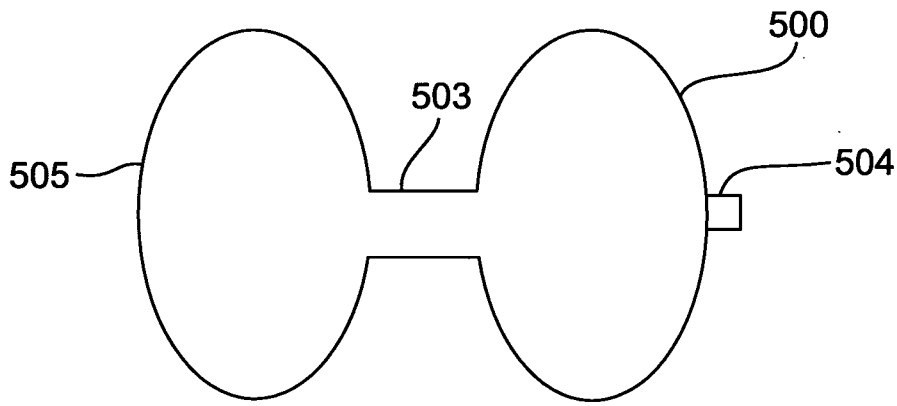

FIG. 5

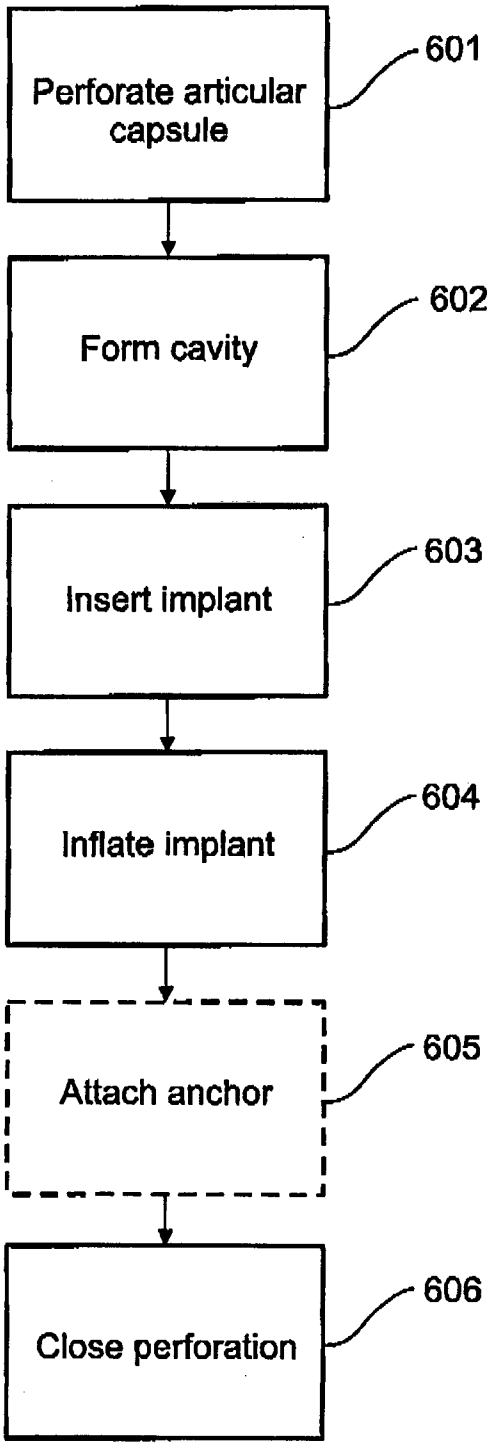
Perforate articular capsule
601
Form cavity
602
Insert implant
603
Inflate implant
604
Attach anchor
605
Close perforation
606

FIG. 6

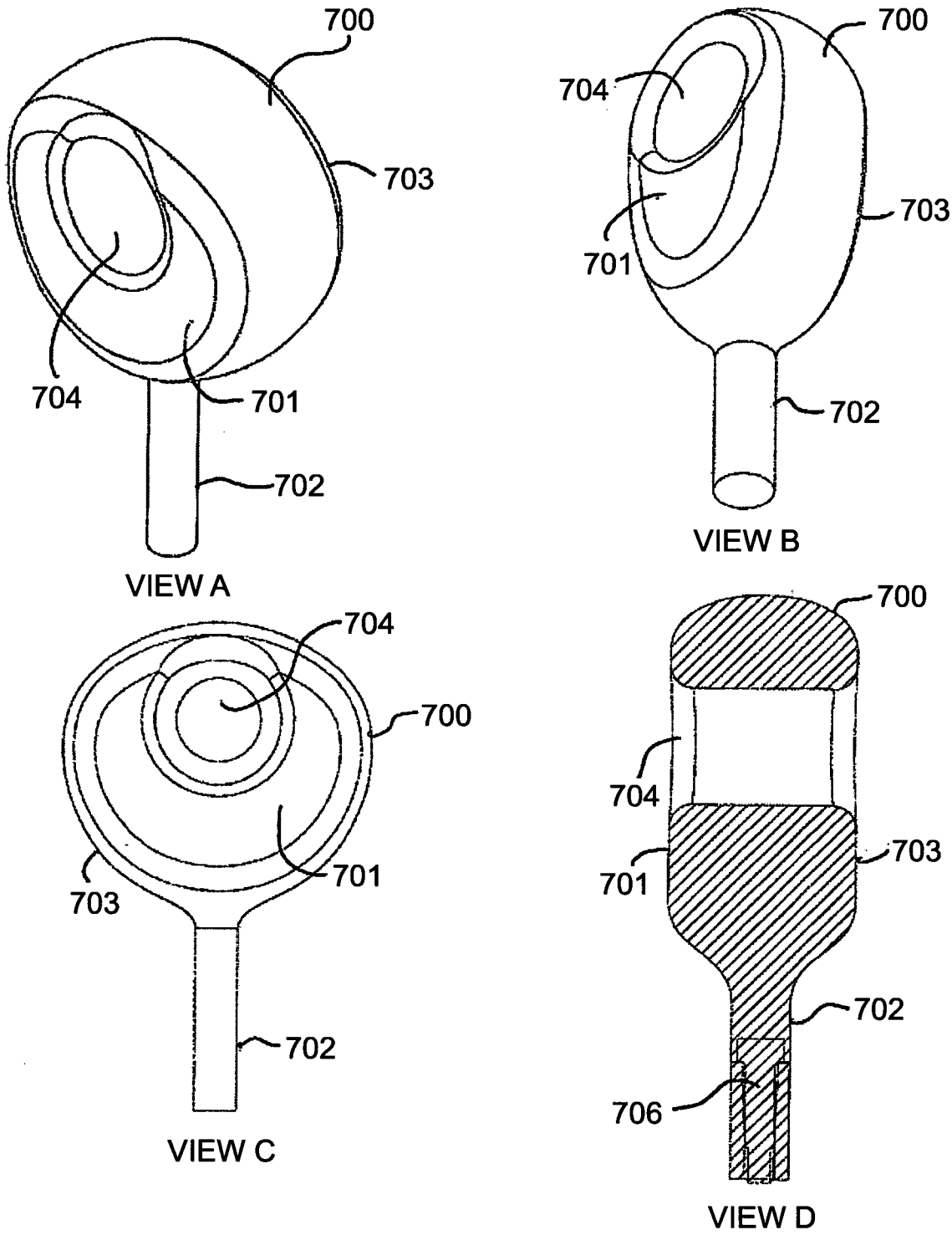
700
703
704
701
702
VIEW A
700
704
703
701
702
VIEW B
704
700
703
701
702
VIEW C
700
704
703
701
702
706
VIEW D

FIG. 7

INTERNATIONAL SEARCH REPORT

International application No
PCT/IB2010/050562

A. CLASSIFICATION OF SUBJECT MATTER
INV. A61F2/42
ADD.

According to International Patent Classification (IPC) or to both national classification and IPC

B. FIELDS SEARCHED

Minimum documentation searched (classification system followed by classification symbols)
A61F

Documentation searched other than minimum documentation to the extent that such documents are included in the fields searched

Electronic data base consulted during the international search (name of data base and, where practical, search terms used)
EPO-Internal

C. DOCUMENTS CONSIDERED TO BE RELEVANT

Category*	Citation of document, with indication, where appropriate, of the relevant passages	Relevant to claim No.
A	WO 98/56317 A1 (BIONX IMPLANTS OY [FI]) 17 December 1998 (1998-12-17) page 5, line 14 - page 12, line 2	1-31
A	US 4 467 479 A (BRODY GARRY S [US]) 28 August 1984 (1984-08-28) the whole document	1-31
A	WO 2004/093767 A1 (ASCENSION ORTHOPEDICS INC [US]; OGILVIE WILLIAM F [US]) 4 November 2004 (2004-11-04) page 2, line 5 - page 7, line 29	1-31
A	WO 02/054992 A1 (ARTIMPLANT AB [SE]; NILSSON ANDERS [SE]; EDBERG BENGT [SE]) 18 July 2002 (2002-07-18) page 14, lines 10-27	1-31

☐ Further documents are listed in the continuation of Box C.

☒ See patent family annex.

* Special categories of cited documents :

"A" document defining the general state of the art which is not considered to be of particular relevance

"E" earlier document but published on or after the international filing date

"L" document which may throw doubts on priority claim(s) or which is cited to establish the publication date of another citation or other special reason (as specified)

"O" document referring to an oral disclosure, use, exhibition or other means

"P" document published prior to the international filing date but later than the priority date claimed

"T" later document published after the international filing date or priority date and not in conflict with the application but cited to understand the principle or theory underlying the invention

"X" document of particular relevance; the claimed invention cannot be considered novel or cannot be considered to involve an inventive step when the document is taken alone

"Y" document of particular relevance; the claimed invention cannot be considered to involve an inventive step when the document is combined with one or more other such documents, such combination being obvious to a person skilled in the art.

"&" document member of the same patent family

Date of the actual completion of the international search	Date of mailing of the international search report
10 June 2010	21/06/2010

Name and mailing address of the ISA/	Authorized officer
European Patent Office, P.B. 5818 Patentlaan 2 NL - 2280 HV Rijswijk Tel. (+31-70) 340-2040, Fax: (+31-70) 340-3016	Buchmann, Gerhard

INTERNATIONAL SEARCH REPORT

International application No.
PCT/IB2010/050562

Box No. II Observations where certain claims were found unsearchable (Continuation of item 2 of first sheet)

This international search report has not been established in respect of certain claims under Article 17(2)(a) for the following reasons:

1. [X] Claims Nos.: 32-50
because they relate to subject matter not required to be searched by this Authority, namely:

Rule 39.1(iv) PCT - Method for treatment of the human or animal body by surgery

2. [ ] Claims Nos.:
because they relate to parts of the international application that do not comply with the prescribed requirements to such an extent that no meaningful international search can be carried out, specifically:

3. [ ] Claims Nos.:
because they are dependent claims and are not drafted in accordance with the second and third sentences of Rule 6.4(a).

Box No. III Observations where unity of invention is lacking (Continuation of item 3 of first sheet)

This International Searching Authority found multiple inventions in this international application, as follows:

1. [ ] As all required additional search fees were timely paid by the applicant, this international search report covers all searchable claims.

2. [ ] As all searchable claims could be searched without effort justifying an additional fees, this Authority did not invite payment of additional fees.

3. [ ] As only some of the required additional search fees were timely paid by the applicant, this international search report covers only those claims for which fees were paid, specifically claims Nos.:

4. [ ] No required additional search fees were timely paid by the applicant. Consequently, this international search report is restricted to the invention first mentioned in the claims; it is covered by claims Nos.:

Remark on Protest

[ ] The additional search fees were accompanied by the applicant's protest and, where applicable, the payment of a protest fee.

[ ] The additional search fees were accompanied by the applicant's protest but the applicable protest fee was not paid within the time limit specified in the invitation.

[ ] No protest accompanied the payment of additional search fees.

INTERNATIONAL SEARCH REPORT

Information on patent family members

International application No
PCT/IB2010/050562

Patent document cited in search report	Publication date	Patent family member(s)	Publication date
WO 9856317 A1	17-12-1998	AT 274874 T	15-09-2004
		AU 7914998 A	30-12-1998
		CA 2290787 A1	17-12-1998
		DE 69826000 D1	07-10-2004
		DE 69826000 T2	08-09-2005
		EP 1356794 A2	29-10-2003
		EP 0988001 A1	29-03-2000
		JP 2002503123 T	29-01-2002
		US 6113640 A	05-09-2000
US 4467479 A	28-08-1984	NONE	
WO 2004093767 A1	04-11-2004	AU 2004232009 A1	04-11-2004
		CA 2522660 A1	04-11-2004
		EP 1643945 A1	12-04-2006
		US 2006241778 A1	26-10-2006
WO 02054992 A1	18-07-2002	AR 032791 A1	26-11-2003
		AT 321508 T	15-04-2006
		AU 2002217737 B2	21-09-2006
		CN 1486166 A	31-03-2004
		DE 60210271 T2	28-12-2006
		DK 1351630 T3	24-07-2006
		EP 1351630 A1	15-10-2003
		ES 2261668 T3	16-11-2006
		JP 4156924 B2	24-09-2008
		JP 2004527274 T	09-09-2004
		PT 1351630 E	31-07-2006
		SE 525131 C2	07-12-2004
		SE 0100127 A	16-07-2002
		US 2004093081 A1	13-05-2004
		US 2006149261 A1	06-07-2006