(12) UK Patent Application (19) GB (11) 2 128 486 A

(21) Application No **8313885**
(22) Date of filing **19 May 1983**
(30) Priority data
(31) **8229229**
(32) **13 Oct 1982**
(33) **United Kingdom (GB)**
(43) Application published
2 May 1984
(51) **INT CL³**
A63F 3/08
(52) Domestic classification
A6H 4A21
G4V 118 AA
U1S 1174 A6H G4V
(56) Documents cited
GBA 2105996
GBA 2048539
GB 1505691
GB 1237010
(58) Field of search
A6H
G4V
(71) Applicant
Keith Anthony Hoare,
104 Taylorson Street,
Salford, Greater
Manchester
(72) Inventor
Keith Anthony Hoare
(74) Agent and/or Address for
Service
O'Briens,
94 Market Street,
Manchester M1 1PG

(54) Electronic lottery apparatus

(57) The apparatus comprises means for making a random selection from a fixed pool of indicia such that once selected an indicium becomes unavailable for re-selection, means for comparing selected indicium with a set of "win" and "lose" indicia and means for indicating to a player the result of the comparison.

The apparatus may have the external appearance of a so-called "fruit machine" and display the results of each selection as a combination of symbols carried upon reels. .

GB 2 128 486 A

The drawings originally filed were informal and the print here reproduced is taken from a later filed formal copy.

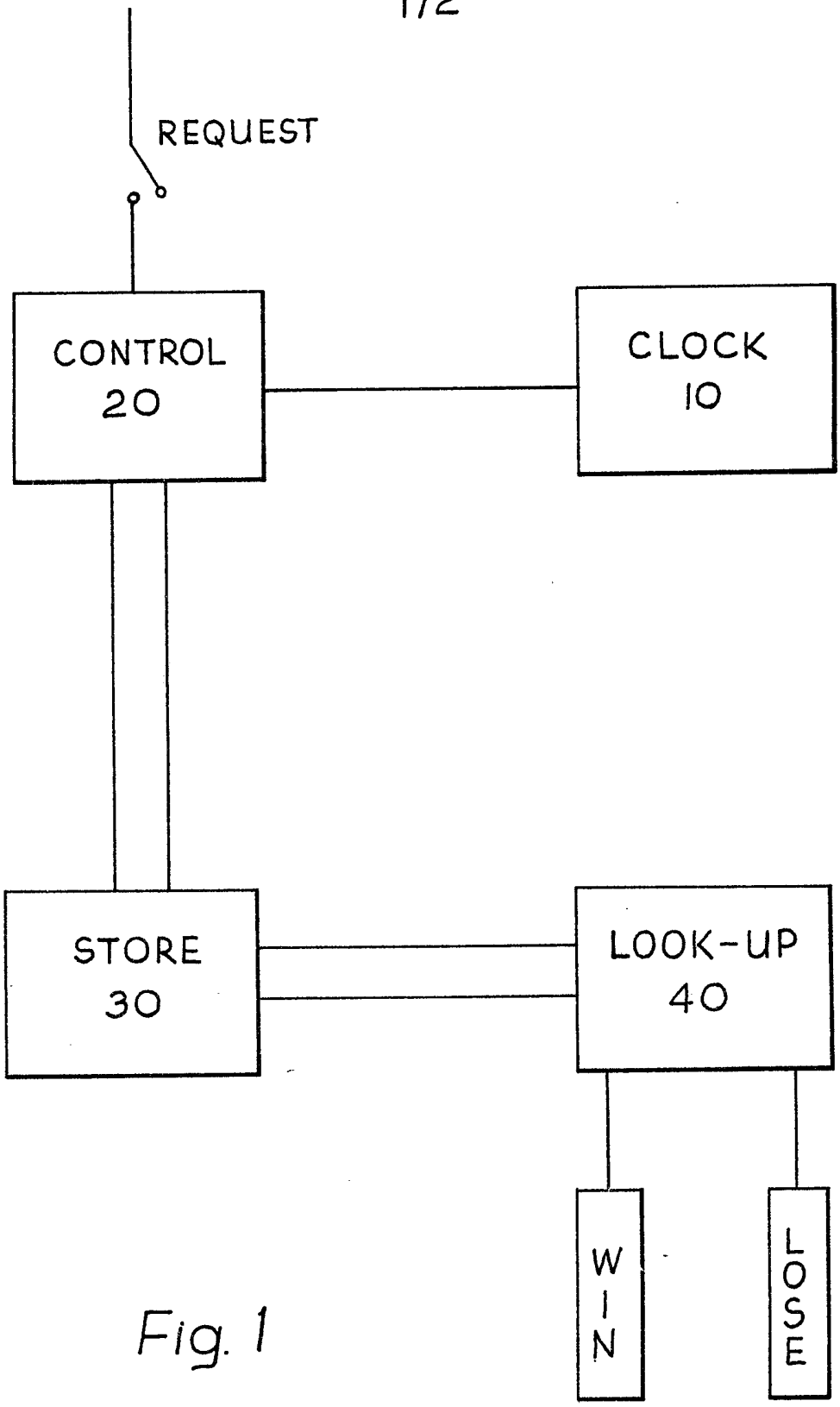

Fig. 1

2128486

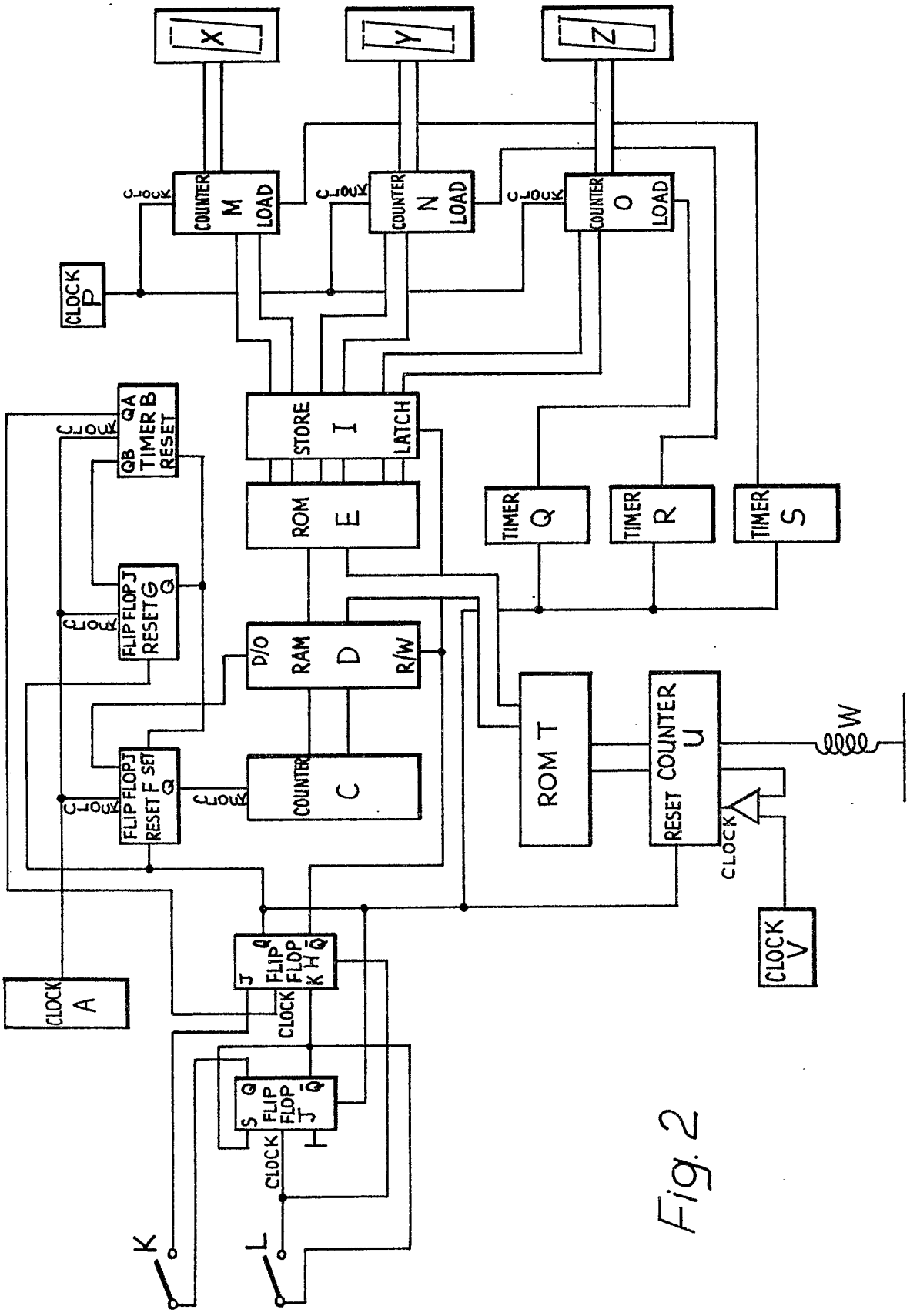

Fig. 2

SPECIFICATION

Electronic lottery apparatus

This invention relates to electronic lottery apparatus and the use of such apparatus in an amusement machine which may have the appearance of a gaming machine such as a "fruit machine".

Games of chance come in many guises but must contain the essential feature that the player's chance is equal and has not been pre-determined in any way.

Perhaps the commonest form of gaming machine is the so-called "fruit machine" which is frequently installed in private clubs, public houses, bars and amusement arcades, with awards varying in accordance with existing legislation. Such a machine includes a number of reels, e.g. three or four, upon each of which a number of symbols are depicted for display in a window. Certain combinations of symbols occurring in the window after rotation of the reels are pre-determined by the manufacturer to be winning combinations causing payouts of various amounts of money from the machine to the player obtaining one of these combinations. To increase the player's interest respective "hold" and "nudge" features are often incorporated into such machines whereby a symbol on one or more reels may be retained from one play to the next (i.e. that reel or those reels are temporarily prevented from rotating) and one or more reels may be caused to move stepwise from one symbol to the next adjacent symbol in an attempt by the player to improve his/her chances of winning.

A present disadvantage of such machines is the fluctuation in the earnings because the percentage payout is calculated on the winning symbols per reel and chance can and does cause winning or losing combinations to repeat in runs. Moreover, regardless of care in manufacture and constant servicing and adjustments, the reels tend to scramble into patterns causing long periods of losses which upset players, or similar periods of excessive payouts with considerable effect on the estimated earnings of the machine for its owner. Indeed, certain unscrupulous fruit machine owners have been known to block certain combinations temporarily to prevent excessive payouts. Needless to say, the overall effect of this form of gambling is to cause payout and earnings of a machine to vary widely from week to week. Furthermore, because of the uncertain profit margin and the vulnerability of the mechanism to tampering, an allowance has to be made for pilfering or, alternatively, for expensive auxilliary protection equipment which is now available.

In contrast to the foregoing, in the game of chance referred to herein as a lottery there are a fixed, limited (finite) number of chances from which the player purchases the number of chances he/she requires and is informed whether or not these are winning chances. In each case the number of winning chances or "wins" is a fixed proportion of the total number of chances and each of the chances may be selected or sold *only once* during any given lottery cycle or game. Accordingly, the organizer of the lottery is always assured of a certain profit for each lottery which takes place. Well known examples of lotteries are raffles, pontoon cards, football cards, local authority lotteries and pontoon bottles, all of which operate by means of tickets which may be individually numbered in the case of raffles or may have a concealed number or symbol or combination of numbers or symbols which are subsequently revealed by rubbing away a surface layer with a coin, thumbnail or the like.

In a simple form of lottery an organizer purchases a sealed jar (pontoon bottle) containing a fixed number, e.g. 200, tickets, a proportion of which, e.g. 20, are winning tickets and the remainder (180) of which are losing tickets. The number and value of the prize tickets are stated on the external label. At the completion of the lottery, when all the tickets are sold, the organizer has a pre-determined amount of profit after paying for the pontoon bottle and the prize money.

An object of the present invention is to provide electronic lottery apparatus whereby at each play random selection of a representation, that is to say of a number, symbol or combination, from a fixed store of same and determination of whether it is a winning representation is carried out by electronic means. In other words the machine is required to simulate a lottery without the need for tickets. Once each of the numbers, symbols or combinations in the store has been chosen, the machine should be reset or automatically reset itself and commence a further lottery with a similar total of chances and percentage of wins. A continuous sequence of lotteries is thus to be provided.

Such a machine will undoubtedly have improved "play appeal" compared to known amusement machines because wins and losses will be evenly spread without blocking of jackpots. Organizers of presently well-known type of lotteries will have their tasks simplified by the use of these machines, and operators will undoubtedly favour such a lottery machine which at the conclusion of the lottery cycle will have retained a known percentage of the gross takings.

With the aforesaid object in view, the present invention provides electronic lottery apparatus comprising means for making a random selection from a fixed pool of representations such that once selected a representation becomes unavailable for reselection during the current game or cycle, means for comparing each selected representation in turn with a predetermined set of winning and/or losing representations and means for indicating to a player whether each particular representation is a winning or a losing representation.

Advantageously, the representations are numbers and the means for randomly selecting same is as described in my earlier patent application serial No. 2094526A, namely an electronic arrangement whereby each unselected

number is presented for selection for an equal time period by incrementing a counter, searching a memory store for that counter number and when no such number is found placing that counter number in a latch for a set time period, but, when that counter number is found in the memory store, further incrementing the counter and re-searching the memory store until a previously unselected number is available for placement in the latch at the beginning of the next time period.

In general terms, it is envisaged that the apparatus of the invention will be coin-operated to randomly select a representation from electronic storage, show the result visibly or audibly (or both) to the player, and, whenever appropriate, pay out of the value of a win in cash or tokens.

Moreover, the apparatus may advantageously be provided with means operative to keep a record of cash received and paid out. At the end of a period of play, herein termed a game or lottery cycle, with all awards having been automatically paid, the remaining money is a known value and also a known percentage of the gross takings. Any tampering with the coin mechanism (which would, in any case, be extremely difficult to accomplish) and any pilfering by collectors or engineers will show up as a deficit.

At the end of each game or lottery cycle the apparatus may be capable of being reset, or of automatically resetting itself, for another game or lottery cycle. Preferably there should also be provision for retention of a record of the current game in the event of any temporary interruption of the power supply to the apparatus.

The total representations, e.g. in the form of a pool of numbers, with some of these predetermined as wins of varying value to the total of a fixed percentage payout are advantageously held in memory cells sealed by the maker.

The robotic nature of the apparatus lends itself to many guises and it can form part of a group of machines controlling a common lottery.

The apparatus of the invention may advantageously have the external appearance of an amusement machine, such as the well known fruit machines described in the introduction hereto, so as to combine the accuracy (as regards win percentage) of the lottery and the play appeal of such a machine. In this form, the apparatus of the invention will conveniently have reels which each carry a number of symbols in the usual manner. However, these reels will be operatively linked to the means for comparing each selected representation with the predetermined winning and/or losing representations so that they stop in respective positions to display a combination of symbols determined by the representation selected at that time. In other words the result of each play is visibly displayed to the player as a combination of symbols on the reels.

The invention will be described further, by way of example with reference to the accompanying drawings, in which:

Fig. 1 is a block diagram illustrating the general arrangement of a preferred practical embodiment of the lottery apparatus of the invention; and

Fig. 2 is a more detailed circuit diagram of a practical embodiment of the apparatus of the invention.

As shown in Fig. 1, a preferred embodiment of the apparatus of the invention, in simple terms, comprises a system clock 10, a control system 20, a store 30 and a look-up table 40. The result of each play is shown simply as a win or lose.

The clock 10, via the control system 20 scans the memory store 30 continuously. When a request is made, the control system 20 disconnects the clock 10 in a position of the memory store 30 that has not already been selected in a previous play of that particular game or lottery cycle. The representation at this position is transferred to the look-up table 40 which contains coding for wins and losses. The appropriate coding set in the look-up table 40 will indicate whether the request selection was a winning or losing representation. On release of the request switch, that immediately preceding selected representation is transferred to the store 30 so that it cannot be re-selected during that particular game or lottery cycle.

The invention relies on the fact that once a selection has been made it cannot be re-selected in the same game. Various means exist whereby this may be accomplished. A usual method would be to use a lower power random access memory with battery or capacitor back-up. However because of possible corruption of the aforesaid method, an alternative arrangement whereby a fuseable link type read only memory, either ultra-violet erasable or non-erasable, could be used by adopting the usual programming techniques of these devices to single bit burning, thus assuring non-corruption of the memory store. As an alternative to the fuseable link read only memory, an electrically alterable read only memory might be used. At the present time the capacity of this particular device is severely limited, but with future techniques it may prove ideal.

Fig. 2 illustrates, in detail, a circuit diagram of a preferred practical embodiment of the invention conforming to the above-described general plan. This embodiment has the superficial appearance of a fruit machine having three rotatable reels X, Y, Z with symbols depicted around the periphery of each. The machine is operated by insertion of a coin at a coin switch L and actuation of a play switch K by the player. The result arrived at by an internal electronic lottery system is shown to the player by rotating the reels so that the symbols finish in a known winning or losing position. If the result is a win a payout mechanism W is activated to release money or tokens from an appropriate outlet in the machine.

A counter C is connected to a random access memory RAM D and to respective read only memories ROMS E and T each having sufficient outputs to access, by means of address lines, all the memory cells of the RAM D. This total access to the RAM D is not, strictly speaking, necessary with the ROMS E and T as they function only as

"lookup" tables, in the case of ROM E deciding on where to stop the symbols on a win or lose combination, and in the case of ROM T deciding the size of win. At the outset of each lottery cycle there are no used memory units in RAM D. Therefore, as RAM D is addressed by the counter C, no output from RAM D is available at D/O and because of this flip flop F cannot toggle.

A digital timer B begins a timing sequence first pulsing QA output and then, after a predetermined time pulsing QB output. When timer B outputs via QB this is stored in a flip flop G via J to Q out, resulting in timer B resetting, and the flip flop F creating, via "set input", data at Q.

A system clock A removes reset to the timer B and set to the flip flop F by toggling the flip flop G back. This in turn releases the flip flop F's set and allows the flip flop F to toggle back. The data set at flip flop F's Q out increments the counter C thereby changing the address to RAM D. As no memory cells have yet been used, the above is repeated such that all the RAM D cells are eventually scanned and the scanning starts all over again. Repeated scanning of all unused cells is important since because some represent wins, and others represent losses, no pattern of subsequent payment can occur.

When a coin is inserted at a coin switch L, a flip flop J registers input of the coin by means of data at Q out. Subsequent pressing of a play switch K places data from the flip flop J to J of a flip flop H. This data is transferred to flip flop H's Q out when a pulse from the timer B occurs. The result is that the RAM D is written with a data bit, the ROM E data out is stored in a store I, timers Q, R, S are set, and a counter U stores ROM T data. The flip flop J is reset and the flip flop H toggles back on the next timing pulse from the timer B.

However, as the timers Q, R, S are set, counters of M, N, O are released from load, resulting in clock P incrementing them to give a visual effect on the reel displays X, Y, Z. Change of reel symbols as each timer Q, R, S times out the load is registered at counters M, N, O, which override the clock P, thus accessing data stored in the store I. If the data indicates a win the win size appears at the same time via ROM T and loads counter U which, using it's own clock V, counts down to zero, pulsing the payout unit W each time.

Subsequent arrival of the used address location results in data at J of the flip flop F which will toggle thus incrementing the counter C before the timer B runs out. This guarantees an unused RAM position for selection upon input of the next coin and actuation of the play switch K.

It should, of course, be appreciated that the foregoing is only a basic system and a person skilled in the art will readily be able to modify same as required or use alternative electronic components for certain of the functions. For the sake of clarity, the system described and illustrated has no "hold" or "nudge" facilities and only single coin entry. These facilities and multiple coin entry could easily be provided in other embodiments by application of known mechanisms. Moreover, automatic clearing of the RAM D could be provided to detect when the store I is full, clear same and increment a meter to indicate completed cycles so that from the known profit per cycle the overall profit can be readily calculated.

Other embodiments comprising machines of different appearance are also within the scope of the invention. Whether a play results in a win or loss may be displayed other than by symbols on reels, for example by numbers on reels, on a screen or as a liquid crystal display, or the words WIN or LOSE may be displayed, or there may simply be distinctive sounds produced by the machine for a win and lose respectively.

Moreover, in order to spread wins evenly across the entire representation pool available during a lottery, a large memory may be subdivided into sections, each of which must contain a certain number of winning representations and be completely used up before moving to the next. This ensures a more even distribution of the awards.

CLAIMS

1. Electronic lottery apparatus comprising means for making a random selection from a fixed pool of representations such that once selected a representation becomes unavailable for reselection during the current game or cycle, means for comparing each selected representation in turn with a predetermined set of winning and/or losing representations and means for indicating to a player whether each particular representation is a winning representation or a losing representation.

2. Apparatus as claimed in claim 1 wherein the representations are in the form of numbers and the means for making a random selection from a fixed pool thereof comprises an electronic arrangement whereby each unselected number is presented for selection for an equal time period by incrementing a counter, searching a memory store for that counter number and when no such number is found placing that counter number in a latch for a set time period, but when that counter number is found in the memory store, further incrementing the counter and re-searching the memory store until a previously unselected number is available for placement in the latch at the beginning of the next time period.

3. Apparatus as claimed in claim 1 or 2 which is coin-operated to make the random selection and which includes means for visibly and/or audibly indicating whether each selected representation is a winning or a losing representation and means operative, whenever appropriate, to pay out the value of a win in cash or tokens.

4. Apparatus as claimed in any preceding claim further including means operative to keep a record of cash received and paid out.

5. Apparatus as claimed in any preceding claim further including means operative at the end of each game or lottery cycle to reset the apparatus for a further game or lottery cycle.

6. Apparatus as claimed in any preceding claim further including means for retention of a record of the current game in the event of any interruption of the power supply to the apparatus.

7. Apparatus as claimed in any preceding claim and having the external appearance of a so-called fruit machine incorporating reels which each carry a number of symbols.

8. Apparatus as claimed in claim 7 wherein the reels are operatively linked to the means for comparing each selected representation with the predetermined winning and/or losing representations so that, at each play, the reels stop in respective positions to display a combination of symbols determined by the selected representation.

9. Apparatus as claimed in any preceding claim wherein the fixed pool of representations is sub-divided into sections, each of which must contain a certain number of winning representations and have all its representations selected before selection from another section commences, thereby ensuring that the occurrence of wins is spread throughout the duration of the entire game or lottery cycle.

10. Electronic lottery apparatus substantially as hereinbefore described with reference to and as illustrated by the accompanying drawings.

New claims or amendments to claims filed on 7th December 1983

Superseded claims 1 & 3

New or amended claims:—

1. Electronic lottery apparatus comprising means for making a random selection from a fixed pool of representations such that once selected a representation becomes unavailable for reselection during the current game or cycle, means for comparing each selected representation in turn with a predetermined set of winning and/or losing representations, means for indicating to a player whether each particular selected representation is a winning representation or a losing representation, and means operative whenever the selected representation is a winning representation to pay out cash or token(s) of a value appropriate to that particular representation.

3. Apparatus as claimed in claim 1 or 2 which is coin-operated to make the random selection and which includes means for visibly and/or audibly indicating whether each selected representation is a winning or a losing representation.

Printed for Her Majesty's Stationery Office by the Courier Press, Leamington Spa, 1984. Published by the Patent Office, 25 Southampton Buildings, London, WC2A 1AY, from which copies may be obtained.