Nov. 19, 1935. R. E. FLEMING 2,021,596

MACHINE FOR PRODUCING PIN TICKETS

Filed May 10, 1933 5 Sheets-Sheet 1

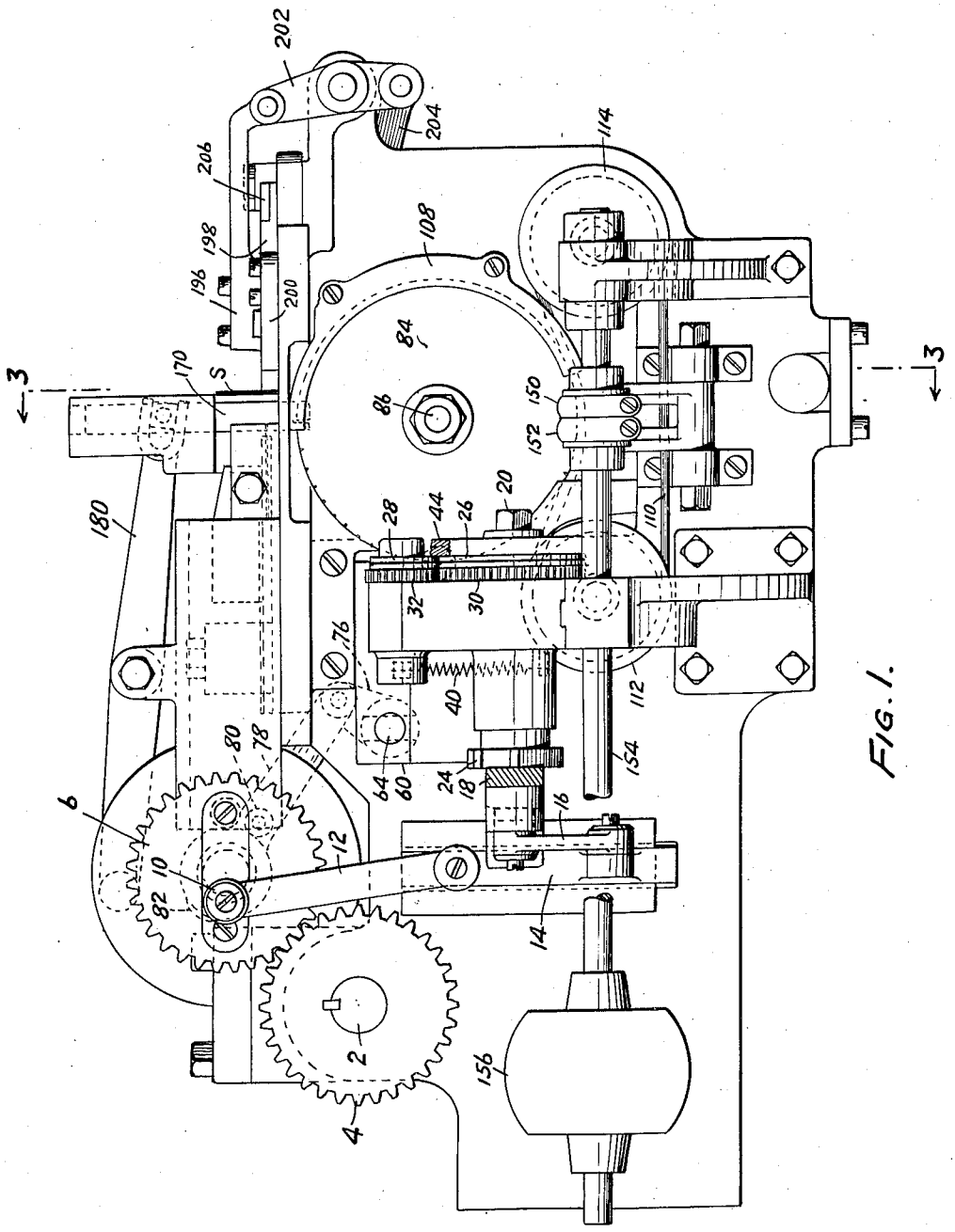

FIG. 1.

INVENTOR

Raymond E. Fleming

BY

Busser & Harding

ATTORNEYS.

WITNESS:

Robt R. Kitchel.

Nov. 19, 1935. R. E. FLEMING 2,021,596

MACHINE FOR PRODUCING PIN TICKETS

Filed May 10, 1933 5 Sheets-Sheet 2

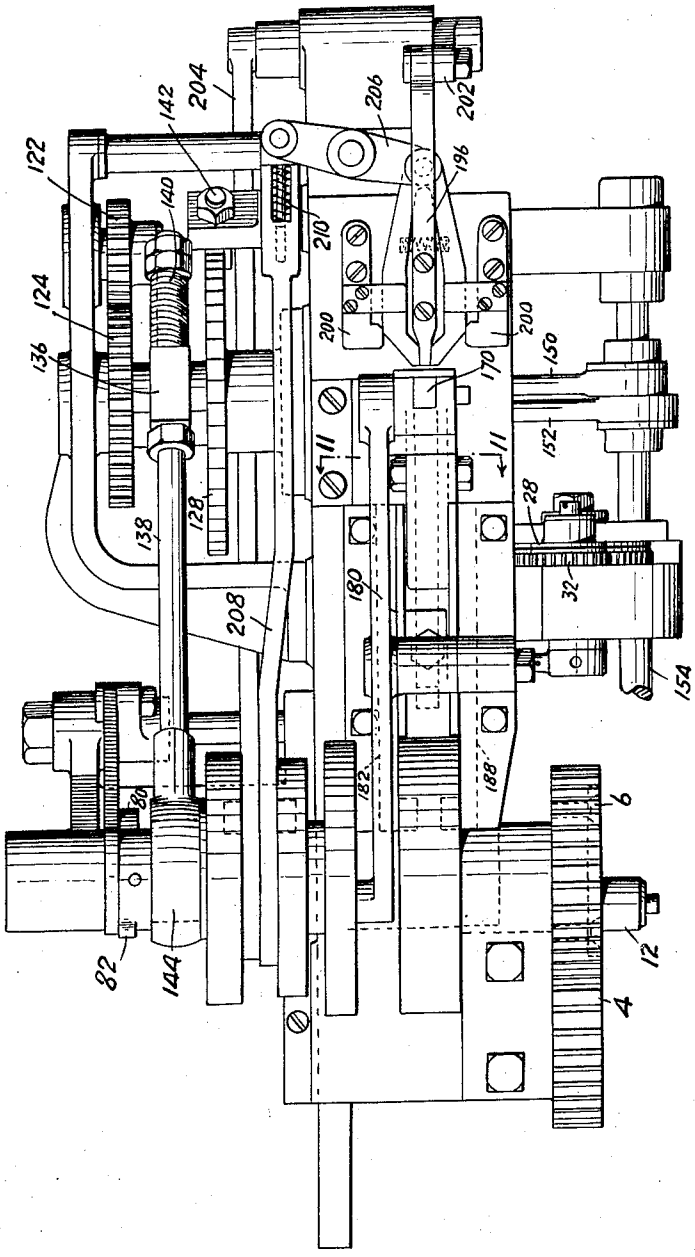

FIG. 2.

INVENTOR

Raymond E. Fleming

BY

Bruesch & Harding

ATTORNEYS.

WITNESS:

Robt. R. Kitchel.

Nov. 19, 1935. R. E. FLEMING 2,021,596

MACHINE FOR PRODUCING PIN TICKETS

Filed May 10, 1933 5 Sheets-Sheet 3

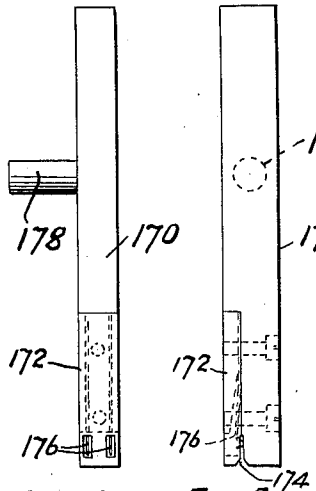

FIG. 4. FIG. 5.

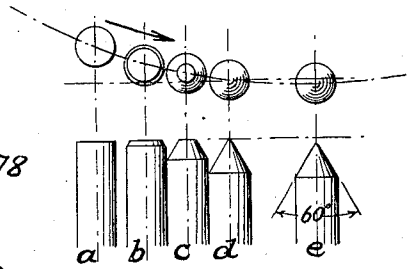

FIG. 16.

FIG. 3.

FIG. 17.

WITNESS:
Robt. R. Kitchel

INVENTOR
Raymond E. Fleming
BY
Bussa & Hartung
ATTORNEYS.

Nov. 19, 1935. R. E. FLEMING 2,021,596

MACHINE FOR PRODUCING PIN TICKETS

Filed May 10, 1933 5 Sheets-Sheet 4

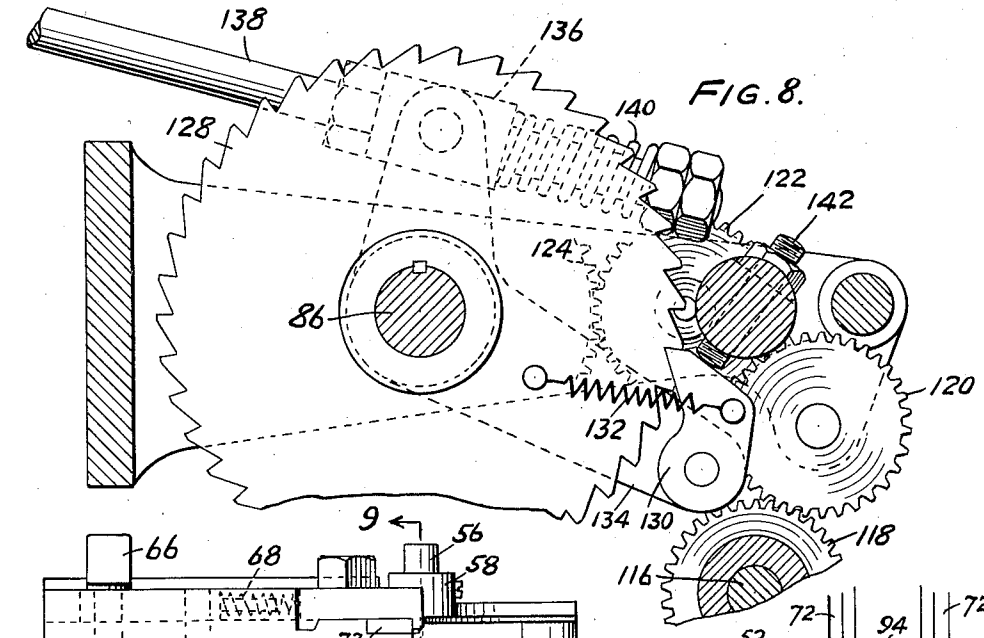

FIG. 8.

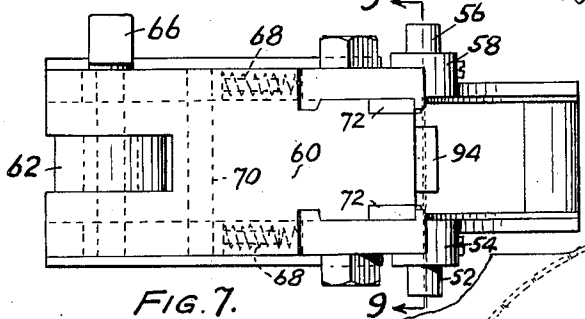

FIG. 7.

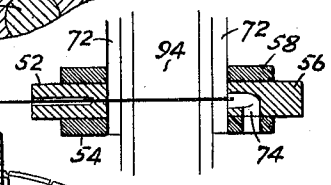

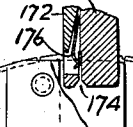

FIG. 9.

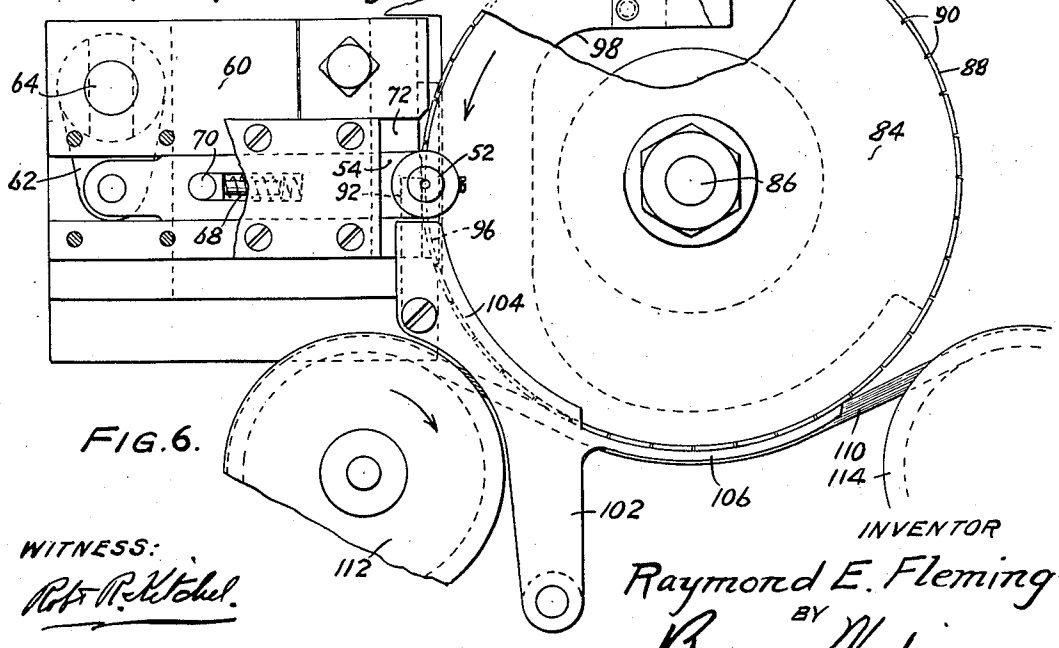

FIG. 6.

WITNESS:
Robt. R. Mitchell

INVENTOR
Raymond E. Fleming
BY
Bussey & Harding
ATTORNEYS.

Nov. 19, 1935. R. E. FLEMING 2,021,596

MACHINE FOR PRODUCING PIN TICKETS

Filed May 10, 1933 5 Sheets-Sheet 5

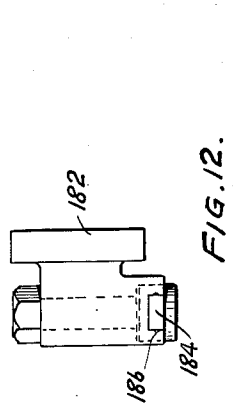

FIG. 12.

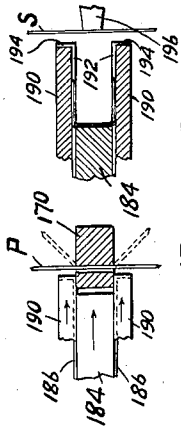

FIG. 13.

FIG. 14.

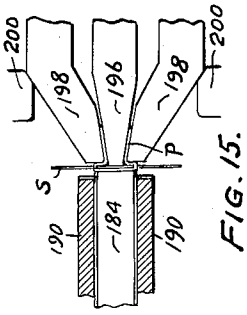

FIG. 15.

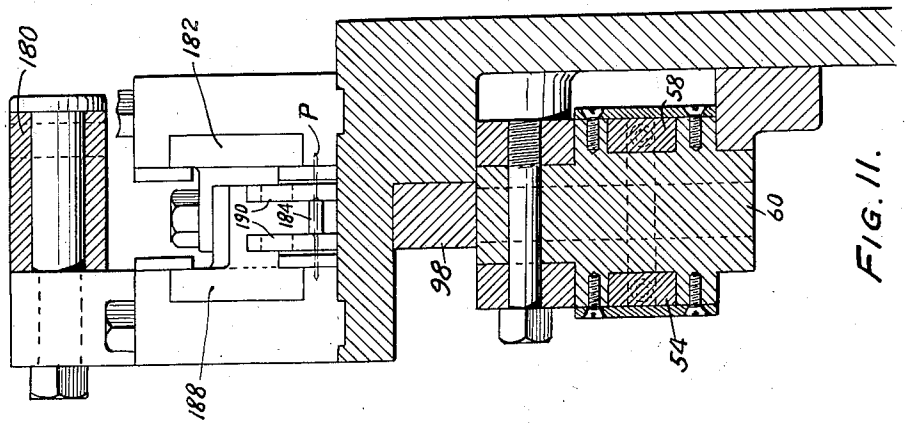

FIG. 11.

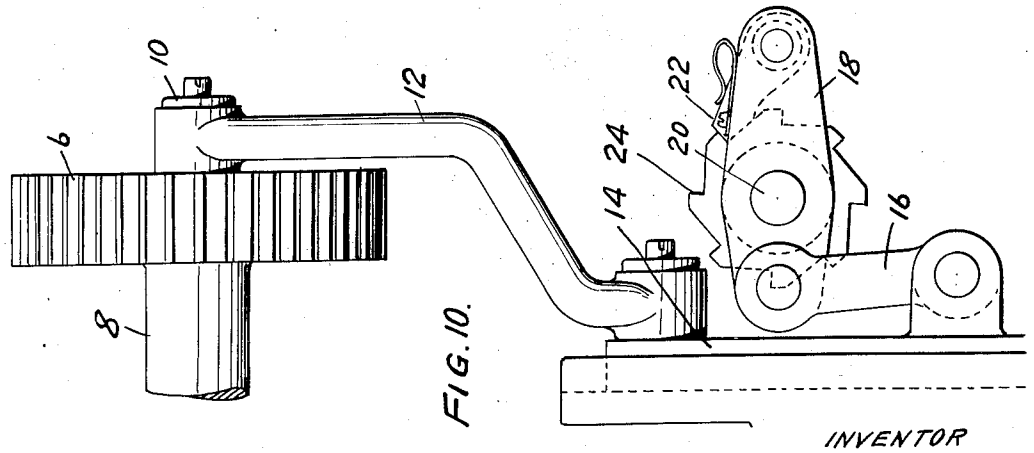

FIG. 10.

WITNESS:
Robt. R. Ketchel.

INVENTOR
Raymond E. Fleming
BY
Bussey & Harding
ATTORNEYS.

Patented Nov. 19, 1935 2,021,596

UNITED STATES PATENT OFFICE

2,021,596

MACHINE FOR PRODUCING PIN TICKETS

Raymond E. Fleming, Philadelphia, Pa., assignor to The Reyburn Manufacturing Company, Philadelphia, Pa., a corporation of Pennsylvania

Application May 10, 1933, Serial No. 670,299

10 Claims. (Cl. 29—13)

This invention relates to pin tickets of the type designed primarily for attachment to fabrics and an improved method and machine for their production.

In the conventional form of pin tickets the points on the pin are provided by diagonally shearing a steel wire, the individual pins following such shearing being bent, passed through the tickets, either individually or in the form of a strip from which the tickets may later be severed, and then secured to the ticket by some additional bending operation involving either the folding of the center portion of the pin over the edge of a ticket or pressing of a portion of the free ends of the pin upon the inner surface of the ticket so as to prevent accidental disengagement of the pin therefrom. The formation of the points of the pin by shearing results in the production of burrs of metal and very sharp points and projections of minute size. While a point is, of course, desirable and necessary to provide ready penetration of the cloth, nevertheless, the burrs with extremely sharp points are objectionable for two reasons. First, the pin tickets are usually supplied in random positions in boxes. When they are applied to the goods the worker reaching into the box to remove a ticket will be scratched or pricked in an annoying fashion. A considerable amount of effort is accordingly directed to insure the withdrawal of a ticket without being pricked.

An even greater drawback to such tickets, however, is the fact that the burrs will pick up fibres and tear the material both in the inserting process and the ultimate removal by the customer. In fine knit goods, such as silk stockings, this may sever a loop so as to start a run.

It is the object of the present invention to provide a pin ticket in which the point of the pin is made in such form that although it will properly penetrate a fabric, there will be no burrs tending to tear or mar the most delicate materials. Furthermore, while the pin is sharp its angles at the point are not such as to produce a pricking sensation in accidental contact therewith. Briefly stated, the pins are provided with points of a generally conical type, the angle of the cone being of substantial amount of the order, for example, of 60°.

The production of the new point is preferably carried out by filing both ends of the pin simultaneously by strokes in opposed directions so as to neutralize the tendency of the pin towards endwise movements, while nevertheless preventing a marring of the point by abutment with a backing surface. The filing preferably takes place by strokes of a pair of reciprocating files while the pin is rotated on its axis to insure a substantially even filing on all sides. As a result, a point of conical or pyramidal type is produced. It is immaterial whether or not the point is a true cone since flat pyramidal sides would not affect its properties.

The process indicated above is preferably carried out by mechanism of novel type which forms one of the objects of the invention in addition to the pin itself and the general process whereby it is formed and manipulated for the ultimate production of a ticket.

The various subsidiary objects of the invention primarily relating to the details of handling of the pin from its severance from a wire to its final location in a ticket will be understood from the following description read in conjunction with the accompanying drawings in which:

Fig. 1 is a side elevation of the machine as a whole, certain parts being broken away and shown in section for clearness of illustration;

Fig. 2 is a plan view of the same, likewise with certain parts omitted;

Fig. 3 is a section taken on the plane indicated at 3—3 in Fig. 1;

Figs. 4 and 5 are front and side elevations respectively of an element designed to remove the pin from a drum carrier for insertion into a ticket;

Fig. 6 is a sectional view illustrating the means for cutting pins from a wire and conveying them during the point forming operation;

Fig. 7 is a plan view of the cutting mechanism;

Fig. 8 is a sectional view illustrating the intermittent drive for the carrier and associated mechanism;

Fig. 9 is a vertical section taken on the plane indicated at 9—9 of Fig. 7;

Fig. 10 is a detail view of the intermittent driving mechanism for the wire feed;

Fig. 11 is a section taken approximately on the plane indicated at 11—11 of Fig. 2;

Fig. 12 is a front elevation of the pin inserting plunger and its carrier;

Figs. 13, 14 and 15 are diagrammatic sectional views illustrating steps in the insertion and fixation of a pin in a ticket;

Fig. 16 is a diagrammatic view illustrating the sequence of events in the formation of the pin points; and

Fig. 17 is a perspective view showing the finished pin ticket.

The main shaft of the machine is indicated at

2, this shaft being suitably coupled to the main driving mechanism of a ticket strip printing and/or feeding machine to which the present mechanism is adapted to be applied as an attachment. This ticket strip mechanism may be of conventional character and is accordingly not illustrated, the only relationship between the two mechanisms being that involved in the timing of the shaft 2 by direct connection with a portion of the main machine together with a guide serving to position the ticket strip for the introduction of pins as will be hereafter evident. The main shaft 2 carries a pinion 4 meshing with a pinion 6 carried by a cam shaft 8 on which are mounted the various cams for imparting timed movements to the parts of mechanism. A crank pin 10 carried by the pinion 6 is connected by a link 12 to a sliding cross head 14 to which is pivoted a link 16 serving to oscillate a lever 18 journalled upon a shaft 20, the lever 18 carrying a pawl 22 spring-pressed into engagement with the ratchet 24 secured to the shaft 20. The shaft 20 carries a lower feed wheel 26 with which cooperates an upper feed wheel 28, the two wheels having peripheral grooves serving for the reception of the steel wire 48 from which the pins are formed. To provide a proper grip the grooves in the feed wheels are less than semi-circles so that the wire is properly clamped and positively fed. The wheel 26 is secured to a gear 30 which meshes with a gear 32 secured to the wheel 28 so that both wheels are positively and intermittently driven by the pawl and ratchet mechanism just mentioned. The wheel 28 and its gear 32 are journalled upon a pin 34 eccentrically carried by a shaft 36 journalled in the frame, this shaft being provided with an arm 38 which is urged in a clockwise direction as viewed in Fig. 3 by a spring 40. The spring 40 by reason of this arrangement serves to move the eccentric pin 40 downwardly to press the upper feed wheel into clamping engagement with the wire.

To prevent overrun of the feed wheels and thereby insure that their movements correspond precisely to those imparted by the pawl and ratchet mechanism, the wheel 26 carries a drum 42 surrounded by a strap 44 which is urged against its periphery by the action of a spring 46 reacting between two parts of the strap, the strap being held against movement by a pivotal connection to the frame. The wire 48 is guided to a position between the feed wheels by a passage 50 through a member of the frame in alignment with the line of contact of the wheels.

The wire extends from the feed wheels through a quill 52 secured in an opening in a slide 54. Aligned with 52 but spaced therefrom, as indicated in Fig. 9, is a second quill 56 secured in a slide 58. The quills are adjustably fixed in these slides for proper cooperation with fixed knives hereafter described. A block 60 which is secured to the frame serves to mount the slides 54 and 58, whose rear ends are connected to a rocking lever 62 carried by a shaft 64 which is provided with a squared end 66 engageable in a corresponding slot in a shaft carrying a lever 76 rocked by a link 78 which is suitably guided and provided with a cam follower 80 arranged to be acted upon by a cam 82 on the cam shaft 8. Springs 68 serve to urge the slides 54 and 58 forwardly to positions limited by their engagement with a transverse pin 70 fixed in the block 60. Knives 72 are fixed in the block with plane surfaces engaging the quills 52 and 56 which by their movements across the knives, while carrying the wire, serve to sever the same. It is generally desirable to not only sever the pin from the supply wire but also to sever a small portion of the free end of the wire to insure an accurate sizing of the pins. For this purpose the quill 56 is provided with an enlarged opening 74 receiving the free end of the feed wire and serving for the discharge of the small amounts which are cut therefrom. When the slides are in their foremost position the openings through the quills 52 and 56 are to the right of the cutting edges of the knives 72, as illustrated in Fig. 6, the position being such that a quite small movement to the left of the slides will result in severing of the wire. The space between the quill 52 and the feed wheels permits the slight flexure of the wire necessary in the cutting movements without disturbing its contact with the feed wheels or permanently bending it.

Projecting between the quills there is the feeding drum indicated at 84 formed by two spaced discs secured to a shaft 86 intermittently driven as described below. The periphery of this wheel 84 is provided with two flanges 88 which are formed with spaced sockets indicated at 90 for the reception of the pins. The intermittent movements of the wheel 84 serve to successively align these sockets with the openings through the quills so that the wires are fed through quill 52 then through the aligned sockets 90 and then into the opening of the quill 56 to such extent as may be desired. To provide proper guidance for the wire in such movements it is backed up by a plate 92 on one side and is guided on its other side by a downwardly projecting blade 94 having a curved lower end 96 extending within the opening provided between the two discs which together form the wheel 84. A backing member 98 provides a more extended support for the pins throughout a considerable portion of the periphery of the wheel 84. This backing member 98 is serrated circumferentially as indicated at 100 in Fig. 3 along its lower portion to prevent substantial axial movements of the pins during the process of the formation of the points. A member 102 provided with an arcuate portion 104 serves to retain the pins within the sockets. Triangular shaped extensions 106 extend along the bottom of the feed wheel and serve to retain them during the point forming operation while they are acted upon by a belt 110, the members 106 serving also to prevent accidental contact of the point-forming files with the belt which is preferably a continuous one of leather. As the pins are moved upwardly by the wheel 84 they are retained within the sockets by a guiding member indicated at 108 in Fig. 1.

The belt 110 is arranged to engage the pins through the angle as illustrated in Fig. 6 serving to press them against the serrations 100 during the process of the filing of their points. The belt 106 is trained over pulleys 112 and 114, the latter of which is carried by a shaft 116 driven through pinions 118, 120 and 122 by a gear 124 secured to the intermittently driven shaft 86 which carries the wheel 84. The gears are so arranged that the belt 110 has a speed considerably in excess of the peripheral speed of the wheel 84. As a result the pins during their advance are rotated on their own axes so as to present different sides to the files.

Driving of the shaft 86 intermittently is accomplished through the medium of a ratchet 128 secured thereto and engageable by a pawl 130 urged into contact with its teeth by a spring 132, the pawl 130 being carried by one arm of a bell crank 134, the other arm of which is provided with

a block 136 through which passes the rod 138 between which and the block 136 is interposed a strong spring 140. The rod 138 is connected to a strap 144 whose movements are controlled by a cam carried by the cam shaft 8. To insure accurate positioning of the shaft 86 the pawl 130 is arranged to be stopped in its forward movements by an adjustable abutment screw 142 which is accurately adjusted to insure alignment of the sockets 90 with the opening in the quill 52. The spring 140 permits an overrun of the rod 138 after the pawl has been arrested.

In order to form the points on the severed pin lengths there are provided flat files 146 and 148 secured respectively to eccentric straps 150 and 152 embracing eccentrics on the shaft 154 which is driven at a high speed continuously by a separate motor 156. It will of course be understood that this shaft can be driven by connections from the main shaft 2; but it is found more convenient to supply a small individual motor for causing it to rotate at the necessary high speeds. The free ends of the straps are pivoted to levers 158 and 160 respectively which are journalled upon eccentrics 162 adjustably mounted in the frames whereby by their rotation the paths of movement of the files may be finely adjusted. The shaft 154 rotates clockwise as viewed in Fig. 3 and as a result the files have imparted thereto simultaneous oppositely directed strokes in somewhat elliptical paths, the files having their maximum inclination to the horizontal at the beginning of their inward strokes. The inclination of the files, however, does not vary to any substantial degree and is preferably of the order of about 30° so that the approximately conical points which are formed on the pin lengths have angles at their points of approximately 60°.

While flat files are preferably used it will be clear that they may be replaced by other abrasive surfaces. For example, they may be replaced by continuously rotating abrasive cylinders whose faces are formed with filed surfaces or with surfaces of emery or the like. Files, however, are preferable inasmuch as the use of an emery wheel or other abrasive wheel is likely to result in the formation of minute burrs which it is the object of the invention to avoid. The files will form conical points of a smooth type without burrs.

The straight pointed pins are carried within their respective sockets to a position above the axis of the carrier 84 whereupon they are removed for insertion through tags. For this purpose a slide 170 is provided moving in a vertical path and provided with a slot 174 formed by a separate member 172 which serves to hold in position a plurality of springs 176 with turned ends projecting across the upper portions of the slot 174 as indicated most clearly in Fig. 5. The slide 170 moves downwardly with the slot 174 in alignment with the openings 90 so as to embrace the pin lengths which on their movements into the slots force the springs 176 outwardly. These when the lowermost position is attained spring back and thus yieldingly retain the pins within the slot. The slide 170 has its movements imparted thereto by engagement of a pin 178 carried thereby by a lever 180 rocked by a suitable cam on the cam shaft 8.

A horizontal slide 182 carries a forwardly projecting tongue 184 which has on its sides horizontal ribs 186. Another horizontally guided slide 188 is provided with a plurality of members 190 located on opposite sides of the tongue 184 and provided with horizontal grooves 192 within which the ribs 186 slide. These ribs have approximately the radii of the pins so that the grooves 192 not only serve to receive the ribs but, as will be evident hereafter, also the pins. The forward faces of the members 190 are also horizontally grooved, these grooves forming a continuation, right angles, of the grooves 192. The slides 182 and 188 are provided at their rear ends with cam followers engageable by cams on the shaft 8 whereby they have imparted to them properly timed horizontal reciprocating movements.

Opposing the tongue 184 and members 190 are cooperating elements indicated at 196 and 198. The first of these is a central member having engagement at 202 with a bell crank which is rocked by a link 204 acted upon by a cam on the cam shaft 8, the member 196 being guided for horizontal sliding movement. Members 198 are also guided to move in horizontal paths and are pivoted at their rear ends to a lever 206 which is yieldingly moved by a link 208 acted upon by a cam on shaft 8, the spring 210 interposed between the link and lever providing the yielding connection. Cams 200 act on sloping surfaces of the members 198 and serve to cam them inwardly towards the central member 196 on their inward strokes.

The machine having now been described in detail the various operations may be taken up in their proper order. The supply wire 48 has intermittent feeding movements applied thereto by the feed drums 26 and 28. As it is fed forwardly it threads through the quill 52 then through aligned sockets 90 in the feed wheel 84 and finally projects slightly within the quill 56 being additionally guided in these movements by the guiding members heretofore described. For economy, the projection within the quill 56 is made as small as possible; but it is desirable that it project to some extent therein in order to insure a uniformity of length and the prevention of a flat end on a finished pin. As soon as the feed wire assumes its final position the quills 52 and 56 are moved to sever it against the knives 72. As soon as severance takes place the feed wheel is given a movement equivalent to the angular spacing of the successive sockets 90 bringing another socket into alignment with the quills. As the feed wheel moves the severed length to which reference has been made moves downwardly being held in the sockets by the retaining member until it is engaged by the belt 106. Thereupon by reason of the differential speed of the belt and the periphery of the feed wheel it is rotated about its own axis during its advance. At this time the files 146 and 148 become active to form the points. In view of the fact that their strokes are oppositely directed and in view of the additional clamping of the pin by reason of the knurling indicated at 100 there is no substantial tendency for the pin to move endwise and, as a result, a symmetrical action thereon is attained resulting in the formation of proper points. By reason of the arcuate path in which the pin length is moved and the slope of the files an action takes place of the character indicated in Fig. 16. The pin length initially has a flat end as indicated at *a* before it approaches the files. As initial engagement takes place as indicated at *b* a frustum is formed, the extent of this increasing as indicated at *c* until finally the flat end disappears entirely as indicated at *d*, this occurring when the axis of the pin reaches the intersection of the vertical plane of its flat end with the uppermost

surface attained by a file in its movement. In order to insure the completion of the point, however, the axis of the pin is made to descend slightly more so that while a conical point is the final result, nevertheless, the axis is somewhat shortened by the movement of each conical point inwardly resulting from the removal of extra material. This additional removed material need only be very slight and is merely that required to insure the formation of a proper point. Following the attainment of the position indicated at *e* the pin withdraws from the files in its finished condition.

Each pin eventually reaches the position for removal by the member 170. By downward movement of the member it is caused to enter the uppermost portion of the slot 144 where it is yieldingly held by the springs 176. It is then drawn from the sockets 90 by upward movement of slide 170. The pin P eventually is brought into a horizontal alignment with the forwardly facing grooves 194 in the members 190. These members are then moved to the right as indicated in Fig. 13 by the movement of slide 180 whereupon they bend the pin into a U-shape as indicated in Fig. 14, the pin lying in position held by the grooves 192. The slide 170 then moves further upwardly out of the path of the tongue 184, the springs 176 yielding during such movement to allow the pin to remain held by members 190.

In the meantime a ticket forming one of a continuous strip S, fed by suitable means on the machine to which the present attachment is secured, is located between the members 190 in their foremost position and the member 196 as illustrated in Fig. 14. The tongue 184 then moves forwardly forcing the ends of the pin through the ticket on opposite sides of the member 196 against which they are bent as indicated in Fig. 15 by the inward movement of the members 198 which, as pointed out above, are yieldingly forced inwardly by the cams 200. The members 196 and 198 then withdraw and the ticket with the pin secured therein is advanced horizontally so that another ticket of the strip is brought in position for the reception of a pin.

The completed product of the machine in the nature of a ticket S carrying a pin P severed from the continuous strip is illustrated in Fig. 17. It will be understood that in accordance with the invention the pin P may be carried by the ticket in any suitable fashion. That is, it may, in a conventional manner, have a portion thereof looped about the end of the ticket to hold it in position. The present invention is concerned primarily with the points which when formed in the manner shown will be without burrs and will have an angle at the point of the order of 60°, the angle preferably being greater than 20° and not much more than 60°. The minimum angle is dictated by the fact that the point should not be too thin since, otherwise, even a careful filing action may result in a bending thereof so that it may tear fabrics. On the other hand, the maximum angle is limited by the necessity for proper penetrability which decreases as the angle increases. The point of the pin is substantially a true cone although it may deviate therefrom due to the character of the movements imparted to the files which do not move in precisely straight paths. The term "conical" is used somewhat broadly also to include a pyramidal form of point which may result due to the intermittent movements of the carrier and the discontinuity of the abrading strokes. In any case, however, the point has a generally conical form having the characteristics just indicated and particularly characterized by an absence of burrs. The pin indicated is thus applicable to the most delicate of fabrics and furthermore may be handled more conveniently and rapidly since it will not produce the pricking caused by pins of the conventional type.

It will be understood that the process and machine utilized for forming the improved pin ticket may vary considerably from the above specific disclosure without departing from the invention as defined in the following claims.

What I claim and desire to protect by Letters Patent is:

1. In combination, means for feeding a supply wire, means for severing pin lengths from the supply wire, a rotary carrier having sockets receiving the lengths to advance them transversely to their axes, means for abrading the lengths to form points thereon, and means operating in timed relationship to the severing means for removing the pointed lengths individually from the carrier.

2. In combination, a rotary carrier having axially extending slots in its periphery, means for feeding a supply wire, guiding means for said wire, means for advancing the carrier to align slots therein with said guiding means to receive the wire therefrom, cutting means fixed adjacent the wire receiving position of said slots, and means for moving the guiding means relatively to said cutting means to sever a pin length from the supply wire and leave said length in a slot.

3. In combination, means for feeding a supply wire, means for severing a pin length from the supply wire, means for advancing the length transversely to its axis and for causing it to rotate about its axis, and a plurality of abrading surfaces having simultaneous oppositely directed movements at an acute angle to the axis of the length to form generally conical points thereon during its advance.

4. In combination, means for feeding a supply wire, means for severing a pin length from the supply wire, a rotary carrier for advancing the length transversely to its axis and for causing it to rotate about its axis, and a plurality of abrading surfaces having simultaneous oppositely directed movements at an acute angle to the axis of the length to form generally conical points thereon during its advance.

5. In combination, means for feeding a supply wire, means for severing a pin length from the supply wire, a rotary carrier for advancing the length transversely to its axis and for causing it to rotate about its axis, and a plurality of files having simultaneous oppositely directed strokes at an acute angle to the axis of the length to form generally conical points thereon during its advance.

6. In combination, means for feeding a supply wire, means for severing a pin length from the supply wire, a rotary carrier for advancing the length transversely to its axis and for causing it to rotate about its axis, and filing means arranged to form a generally conical point on the pin length during its advance, said filing means including a link, a file carried by the link at an angle to the axis of the pin length, a swinging link support for the first named link adjacent the position of the file, and crank means for imparting rotary motion to a portion of the first named link remote from the file.

7. In combination, means for feeding a supply

wire, means for severing a pin length from the supply wire, a rotary carrier for advancing the length transversely to its axis and for causing it to rotate about its axis, and filing means arranged to form a generally conical point on the pin length during its advance, said filing means including a link, a file carried by the link at an angle to the axis of the pin length, an adjustable swinging link support for the first named link adjacent the position of the file, and crank means for imparting rotary motion to a portion of the first named link remote from the file.

8. In combination, a rotary carrier having sockets receiving lengths of wire to advance them transversely to their axes, means for removing the lengths individually from the carrier, and means for bending said lengths to form pins, said removing means acting as an anvil in cooperation with the bending means.

9. In combination, means for feeding a supply wire, means for severing a pin length from the supply wire, a carrier for advancing the length transversely to its axis and for causing it to rotate about its axis, and a file moving at an acute angle to the axis of the length to form a generally conical point thereon during the advance, said carrier serving to gradually cause the axis of the length to approach the abrading surface of the file along an arcuate path convex towards the file.

10. In combination, means for feeding a supply wire, means for severing a pin length from the supply wire, a carrier for advancing the length transversely to its axis and for causing it to rotate about its axis, and a member having an abrading surface moving at an acute angle to the axis of the length to form a generally conical point thereon during the advance, said carrier serving to gradually cause the axis of the length to approach the abrading surface along an arcuate path convex towards the abrading surface.

RAYMOND E. FLEMING.