Aug. 2, 1966 H. J. CARR 3,263,861

DISPENSING CARTON

Filed June 9, 1964 2 Sheets-Sheet 1

Fig. 1.

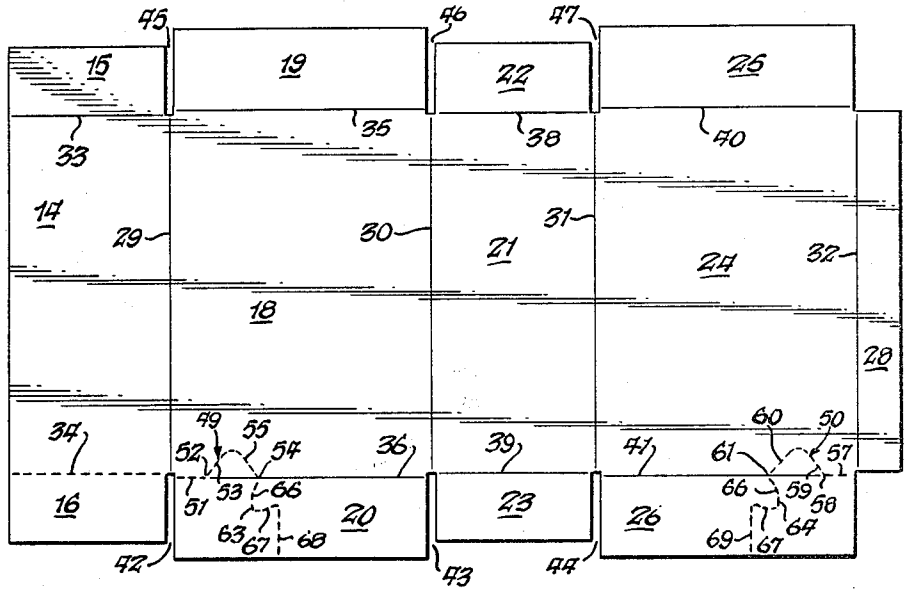

Fig. 2.

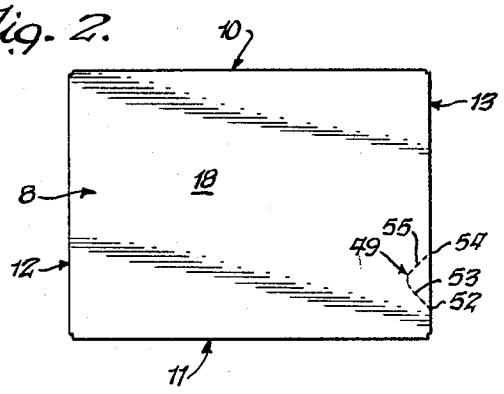

Fig. 3.

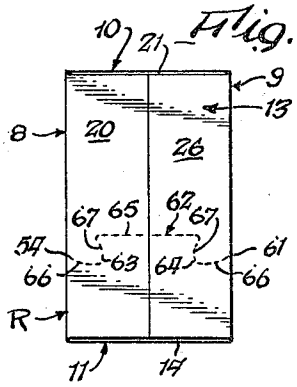

Fig. 4.

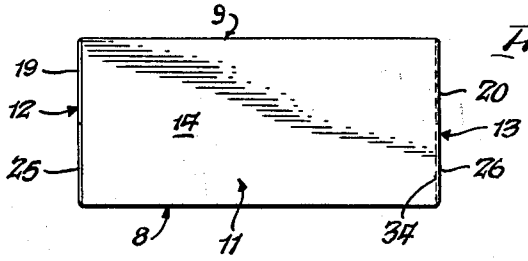

INVENTOR.
HAROLD J. CARR
BY
Popp and Sommer
ATTORNEYS

Aug. 2, 1966 H. J. CARR 3,263,861

DISPENSING CARTON

Filed June 9, 1964 2 Sheets-Sheet 2

Fig. 5.

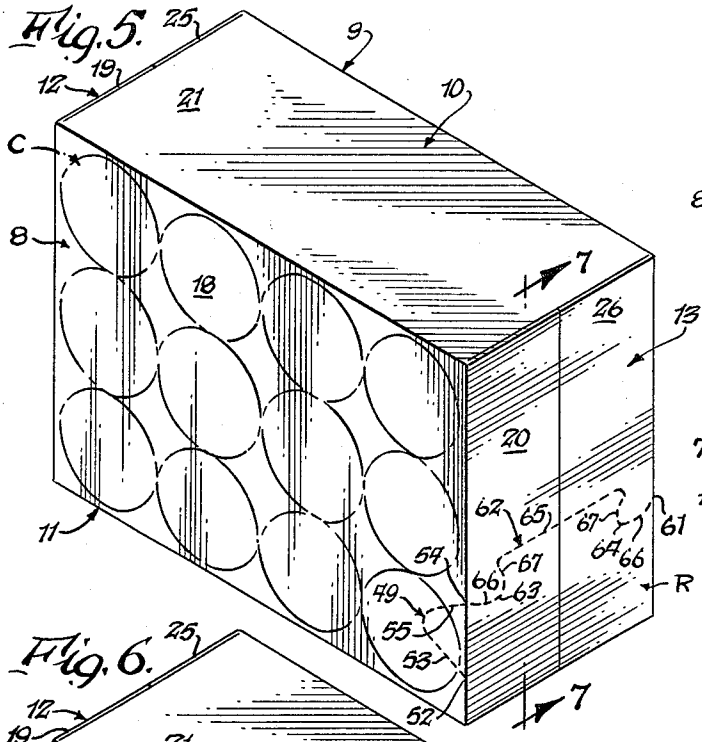

Fig. 8.

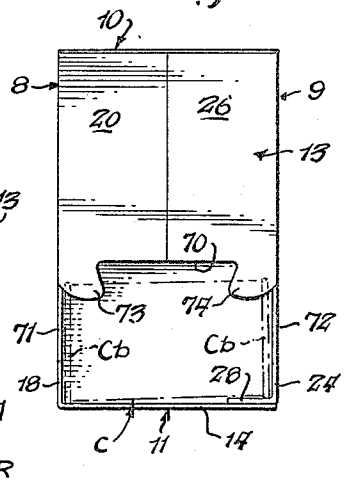

Fig. 6.

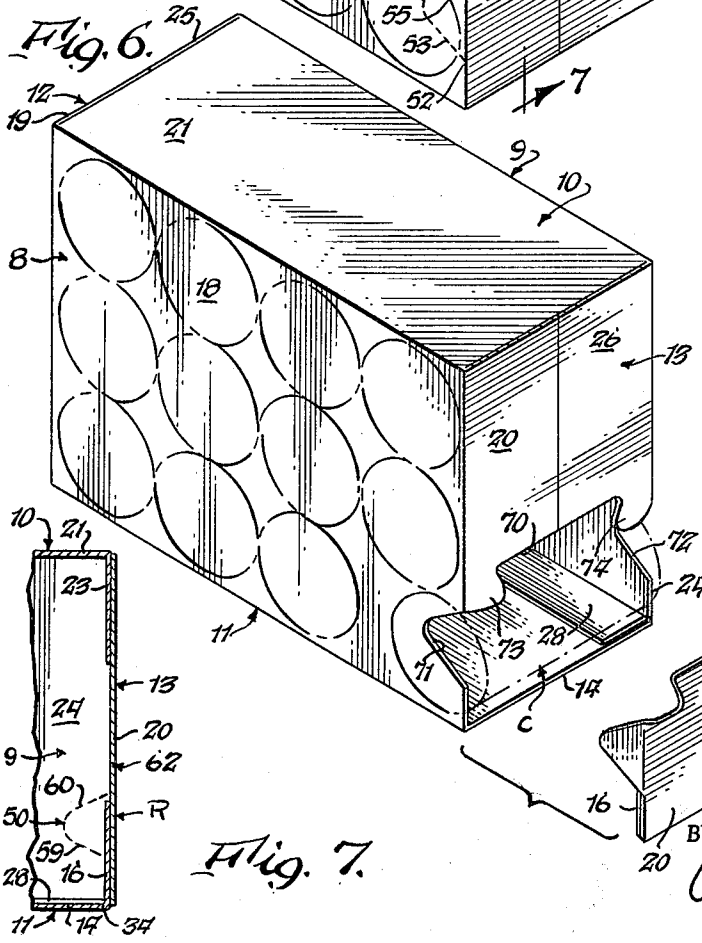

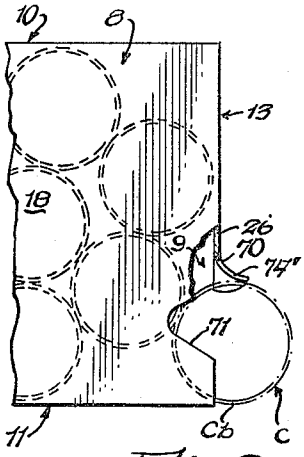

Fig. 9.

Fig. 7.

INVENTOR.
HAROLD J. CARR
BY
Popp and Sommer
ATTORNEYS

United States Patent Office 3,263,861 Patented August 2, 1966

3,263,861

DISPENSING CARTON

Harold James Carr, Rochester, N.Y., assignor to Lawless Bros. Container Corp., North Tonawanda, N.Y., a corporation of New York

Filed June 9, 1964. Ser. No. 373,727
6 Claims. (Cl. 221—302)

This invention relates to a dispensing carton for rigid cylindrical objects such as beverage containing cans.

The principal object of the present invention is to provide a shipping or carrying carton adapted to contain a plurality of rigid cylindrical objects and formed to permit the removal of a part of its wall structure to provide an opening through which the objects can be removed singly and successively as desired.

Another object is to provide such a carton which may be supported on a substantially horizontal surface even after the dispensing opening has been provided therein and the cylindrical objects will not unintentionally roll out through said opening.

Another object is to provide such a carton of such size and proportion as will permit the same to be kept on the shelf in a household type refrigerator.

Another object is to provide such a carton which is simple in construction and inexpensive to manufacture so that it may be thrown away after its contents are removed.

Still other objects and advantages of the present invention will be apparent from the following detailed description of a preferred embodiment shown in the accompanying drawings wherein:

FIG. 1 is a top plan view of a blank piece of paperboard used to make a dispensing carton in accordance with the principles of the present invention.

FIG. 2 is a side elevational view of the carton after it has been assembled from the blank shown in FIG. 1.

FIG. 3 is a front end elevational view of the assembled carton as viewed from the right of FIG. 2.

FIG. 4 is a bottom elevational view of the assembled carton as viewed from the bottom of FIG. 2.

FIG. 5 is a slightly enlarged perspective view of the inventive carton in an intact condition, as viewed from the front and right side thereof, and illustrating the cans therewithin in phantom.

FIG. 6 is a view similar to FIG. 5 but showing a part of the wall structure of the carton removed to provide an opening through which the cans may be dispensed.

FIG. 7 is a fragmentary vertical sectional view of the carton taken on line 7—7 of FIG. 5.

FIG. 8 is an end elevational view of the front end of the carton shown in FIG. 6, that is, after a part of its wall structure has been removed to provide a dispensing opening.

FIG. 9 is a fragmentary elevational view of the right side of the carton after being provided with its dispensing opening and showing a portion of the carton adjacent such opening broken away to indicate more clearly the operation of a detent finger portion during withdrawal of a can from the carton.

The carton of the present invention when assembled is an enclosed rectangular box-like structure, slightly elongated vertically and also from front to rear, having vertical flat right and left side walls **8** and **9**, respectively, spaced apart a distance corresponding generally to the axial length of a cylindrical object C such as a can adapted to be contained in a plural number of the same within the carton. The carton also includes a horizontal flat top wall **10**, a horizontal flat bottom wall **11** and vertical flat rear and front end walls **12** and **13**, respectively.

Preferably the carton is constructed of a single piece of paperboard which is cut, scored and line-perforated

as shown in FIG. 1 to provide a one-piece blank having the configuration there shown. While the carton may be formed of any suitable sheet material, paperboard or otherwise, it is preferred to make the same of E-flute corrugated 200# double face liner board. While the carton may be sized and proportioned to accommodate any desired type of cylindrical object C, the embodiment illustrated is intended for a standard 12 ounce can made of sheet metal which is currently commonly used to market beverage products such as beer. Such a 12 ounce can C has a cylindrical side wall joined at opposite ends to end heads in such manner as to form an annular external bead C*b*. The overall length of each can is about 4⅞ inches and its diameter at the end beads is approximately 2 11/16 inches. The carton is illustrated as adapted to contain 12 such cans arranged in three superimposed horizontal rows with four cans in each row, the longitudinal axes of the cans extending generally perpendicularly to side walls **8** and **9**.

Referring to FIG. 1, the one-piece blank is shown as including a rectangular bottom panel **14** having rectangular extensions **15** and **16** at opposite ends, a rectangular right side panel **18** having rectangular extensions **19** and **20** at opposite ends thereof, a rectangular top panel **21** having rectangular extensions **22** and **23** at opposite ends thereof, and a rectangular left side panel **24** having rectangular extensions **25** and **26** at opposite ends thereof. Along its exposed edge the right side panel **24** is provided with a relatively narrow rectangular flange-like extension **28**.

A straight fold line **29** separates the panels **14** and **18**, a similar fold line **30** separates panels **18** and **21**, a similar fold line **31** separates panels **21** and **24**, and a similar fold line **32** separates panel **24** from its extension **28**. A straight fold line **33** separates panel **14** from one of its extensions **15**. A row of longitudinally spaced slits **34** provides a straight tear line separating panel **14** from its other extension **16**. A straight fold line **35** separates panel **18** from one of its extensions **19** and a similar fold line **36** separates this panel from its other extension **20**. A straight fold line **38** separates panel **21** from one of its extensions **22** and a similar fold line **39** separates this panel from its other extension **23**. A straight fold line **40** separates panel **24** from one of its extensions **25** and a similar fold line **41** separates this panel from its opposite extension **26**.

The various fold lines are provided by scoring or creasing the sheet material of which the carton blank is formed. The technique for doing this is well known in the art.

For ease in overlapping the various panel extensions at the corresponding end of the blank, these extensions are made slightly shorter in width than the corresponding main panel, that is, from left to right as viewed in FIG. 1. This is achieved by provided cut-outs or slots between the various panels such as indicated at **42–47**. The top and bottom wall extensions **15**, **16**, **22** and **23** are preferably shorter in length, that is, in the vertical direction as viewed in FIG. 1, than the side wall panel extensions **19**, **20**, **25** and **26**. Flange extension **28** is shown as being slightly shorter in length than panel **24**.

When assembling the carton the blank is folded along the various fold lines **29–32** to provide a tubular structure in which the flange extension **28** is arranged on top of the bottom panel **14** as shown in FIGS. 6 and 8. Thereafter the shorter extensions at each end of the bottom and top panels are folded along their respective fold lines **33**, **34**, **38** and **39**, following which the extensions of the side wall panels are folded along their respective fold lines **35**, **36**, **40** and **41**. More specifically described with respect to the front end of the carton which is formed by the lower panel extensions **16**, **20**, **23** and **26** as shown in FIG. 1, bottom panel extension **16** is folded upwardly along line

34, top panel extension 23 is folded downwardly along line 39, and side wall panel extensions 20 and 26 are folded along the now upright fold lines 36 and 41 so as to overlap the extensions or flaps 16 and 23, as shown in FIG. 7. The various overlapping extensions including the flange portion 28 and bottom panel 14 are joined together in any suitable manner although it is preferred to join them adhesively by a suitable glue.

Referring to FIG. 8, it will be seen that the superimposed arrangement of flange 28 on bottom panel 14 provides a step on which the cans C are supported in a slightly tilted condition. This has been found to facilitate the rolling of the cans toward an opening through which these cans can be withdrawn and which opening will now be described as to its operation.

Referring to FIG. 4, it will be seen that the tear line 34 is along the juncture between bottom wall 11 and fold end wall 13.

A side tear line is provided on each of the side walls 8 and 9 beginning and ending on the fold lines 36 and 41 which are now upright junctures between these side walls and the front end wall 13. Thus a first side tear line 49 is provided on side wall panel 18, beginning and ending on fold line 36, now the upright juncture between right side wall 8 and front end wall 13. Similarly, a second side tear line 50 is provided on left side wall panel 24 beginning and ending on fold line 41, now the upright juncture between left side wall 9 and front end wall 13.

The side tear line 49 includes a lower portion 51 beginning adjacent the corresponding end of bottom tear line 34 at the base of slot 42 and extending upwardly along fold line 36 to an intermediate place 52 less than half the end-to-end height of such side tear line 49. The tear line 49 also includes an upper portion which extends first upwardly on side wall panel 18 away from place 52 at an angle of about 45° to the bottom wall 11 of the assembled carton, such inclined part being designated 53. This upper portion thence reverses and extends upwardly on side wall panel 18 at an angle of about 45° to bottom wall 11 toward fold line 36 rejoining the same at an upper place indicated at 54, such second inclined part being designated 55. Upper place 54 is located above the upper surface of bottom wall 11 a distance corresponding to about the diameter of one of the cylindrical objects or cans C to be dispensed from the carton.

The second side tear line 50 includes a comparable lower portion 57 extending along fold line 41 adjacent the corresponding end of fold line 32 which is the lower edge in effect of the left side panel 24. This lower side tear line portion 57 extends to an intermediate place 58 comparable to place 52. The upper portion of side tear line 50 includes a first inclined part 59 comparable to inclined part 53, and a second inclined part 60 comparable to inclined part 55. Inclined part 60 rejoins fold line 41 at an upper place designated 61 which compares to upper place 54.

An upper tear line represented generally by the numeral 62 is provided on the front end wall 13 and is shown as including a pair of end portions 63 and 64 and a higher intermediate portion 65 therebetween. Each of the end portions 63 and 64 is shown as being connected to the upper end of the corresponding one of the side tear lines 49 and 50 and extends first downwardly therefrom inwardly of end wall 13, as indicated at 66, and thence upwardly and outwardly as indicated at 67 to join the corresponding end of the intermediate portion 65. This intermediate tear line portion 65 is preferably straight and horizontal. The tear line portion 65 is formed in part on extension 20 as indicated by the line 68 in FIG. 1, and in part by a similar line 69 on panel extension 26.

The side tear lines 49 and 50 and upper tear line 62 are formed in a manner similar to tear line 34. That is, these tear lines are formed by a line of interrupted slits. The manner and means for forming such slits are also well known in the art.

It will be seen that the effectively connected tear lines 34, 49, 62 and 50 outline a portion of the carton which can be removed as a unit as depicted in FIG. 6, such removable structure being designated R. Removal of the structure R leaves an opening 70 in front end wall 13 having recesses 71 and 72 in side walls 8 and 9, the opening being immediately above bottom wall 11. The contour of the top edge of opening 70 which is defined by tear line 62 is such as to provide a pair of detent fingers 73 and 74 adjacent side walls 8 and 9, respectively.

The recesses 71 and 72 permit the fingers of a person, such as the thumb and first or second finger, to grasp the end portions of cylindrical object or can C which is positioned immediately adjacent opening 70 so as to expose such can end portions through side wall recesses 71 and 72. After grasping the can, it is pulled forwardly so as to cause the fingers 73 and 74 to flex or yield to permit the can C being withdrawn to leave opening 70, as depicted at 74' in FIG. 9. Thus the fingers 73 and 74 serve as detents which yieldingly restrain the cans C from leaving opening 70. However, a slight pull upon the lowermost and most forward can will overcome the yielding restraint of these fingers. The restraint is sufficient to retain cans within the interior of the carton and thereby prevent unintentional discharge. As a can is removed through opening 70, the weight of other cans will cam another can to the discharged opening to be restrained in a ready-to-be-removed position by the detent fingers 73 and 74. The stepped bottom wall provided by flange 28 on top of bottom wall panel 14 tilts the cans C slightly so as to facilitate cans rolling toward discharge opening 70. In this manner, the cans can be removed singly and successively as desired but unintentional discharge of cans is prevented.

The size and proportioning of the carton is such that it will conveniently fit on a shelf in a household type refrigerator so that any cans still within the carton can be kept refrigerated until desired for consumption. When all cans have been removed from the carton, the latter may be thrown away.

From the foregoing, it will be seen that the embodiment illustrated and described accomplishes the aforestated objects of the invention. Inasmuch as changes and modifications may occur to those skilled in the art without departing from the spirit of the present invention, the embodiment shown and described is illustrative and not limitative of the invention the scope of which is to be measured by the appended claims.

What is claimed is:

1. A dispensing carton for rigid cylindrical objects, comprising a pair of spaced side walls, a bottom wall joining the lower edges of said side walls, an end wall joining the end edges of said bottom and side walls, a bottom tear line along the juncture between said bottom and end walls, a side tear line on each of said side walls beginning and ending on the upright juncture between such side wall and said end wall and including a recessed portion intermediate its ends, the upper ends of said side tear lines being above said bottom wall a distance corresponding to about the diameter of one of said cylindrical objects to be dispensed from the carton, the lower ends of said side tear lines terminating adjacent the ends of said bottom tear line, and an upper tear line on said end wall connected at opposite ends to said upper ends and contoured to form a finger having a portion which extends below the level of said upper ends, whereby the structure outlined by said tear lines is adapted to be removed leaving an opening through which said cylindrical objects may be pulled singly against the yielding restraint of said finger which acts as a detent.

2. A dispensing carton for rigid cylindrical objects, comprising a pair of spaced side walls, a bottom wall joining the lower edges of said side walls, an end wall joining the end edges of said bottom and side walls, a bottom tear line along the juncture between said bottom

and end walls, a side tear line on each of said side walls beginning and ending on the upright juncture between such side wall and said end wall and including a recessed portion intermediate its ends, the upper ends of said side tear lines being above said bottom wall a distance corresponding to about the diameter of one of said cylindrical objects to be dispensed from the carton, the lower ends of said side tear lines terminating adjacent the ends of said bottom tear line, and an upper tear line on said end wall connected at opposite ends to said upper ends and contoured to form a pair of spaced fingers each having a portion which extends below the level of said upper ends, whereby the structure outlined by said tear lines is adapted to be removed leaving an opening through which said cylindrical objects may be pulled singly against the yielding restraint of said fingers which act as detents.

3. A dispensing carton for rigid cylindrical objects, comprising a pair of spaced side walls, a bottom wall joining the lower edges of said side walls, an end wall joining the end edges of said bottom and side walls, a bottom tear line along the juncture between said bottom and end walls, a side tear line on each of said side walls beginning and ending on the upright juncture between such side wall and said end wall and including a recessed portion intermediate its ends, the upper ends of said side tear lines being above said bottom wall a distance corresponding to about the diameter of one of said cylindrical objects to be dispensed from the carton, the lower ends of said side tear lines terminating adjacent the ends of said bottom tear lines, and an upper tear line including end portions and a higher intermediate portion therebetween, each of said end portions being connected to the upper end of the corresponding one of said side tear lines and extending first downwardly therefrom inwardly of said end wall and thence upwardly to join said intermediate portion, whereby the structure outlined by said tear lines is adapted to be removed leaving an opening through which said cylindrical objects may be pulled singly against the yielding restraint of the detent fingers formed by said end portions.

4. A dispensing carton for rigid cylindrical objects, comprising a pair of spaced side walls, a bottom wall joining the lower edges of said side walls, an end wall joining the end edges of said bottom and side walls, a bottom tear line along the juncture between said bottom and end walls, a side tear line on each of said side walls beginning and ending on the upright juncture between such side wall and said end wall and including a lower portion and an upper portion, said lower portion beginning adjacent the corresponding end of said bottom tear line and extending upwardly along said upright juncture, said upper portion extending first upwardly and inwardly of such side wall away from the upper end of said lower portion and thence upwardly and outwardly of such side wall toward said upright juncture rejoining the same at a place above said bottom wall a distance corresponding to about the diameter of one of said cylindrical objects to be dispensed from the carton, and an upper tear line on said end wall connected at opposite ends to the upper ends of said upper portions of said side tear lines and contoured to form a finger having a portion which extends below the level of said place, whereby the structure outlined by said tear lines is adapted to be removed leaving an opening through which said cylindrical objects may be pulled singly against the yielding restraint of said finger which acts as a detent.

5. A dispensing carton for rigid cylindrical objects, comprising a pair of spaced side walls, a bottom wall joining the ower edges of said side walls, an end wall joining the end edges of said bottom and side walls, a bottom tear line along the juncture between said bottom

and end walls, a side tear line on each of said side walls beginning and ending on the upright juncture between such side wall and said end wall and including a lower portion and an upper portion, said lower portion beginning adjacent the corresponding end of said bottom tear line and extending upwardly along said upright juncture to an intermediate place less than half the end-to-end height of said side tear line, said upper portion extending first upwardly on such side wall away from said upright juncture at an angle of about 45° to said bottom wall and thence upwardly on such side wall at an angle of about 45° to said bottom wall toward said upright juncture rejoining the same at an upper place above said bottom wall a distance corresponding to about the diameter of one of said cylindrical objects to be dispensed from the carton, and an upper tear line including end portions and a higher intermediate portion therebetween, each of said end portions being connected to the upper end of the corresponding one of said side tear lines and extending first downwardly therefrom inwardly of said end wall and thence upwardly and outwardly to join said intermediate portion, whereby the structure outlined by said tear lines is adapted to be removed as a unit leaving an opening in said end wall and recesses in said side walls permitting the ends of one of said cylindrical objects to be grasped and pulled through said opening against the yielding restraint of the detent fingers formed by said end portions.

6. A dispensing one-piece paper board carton for rigid cylindrical objects, comprising a pair of side walls spaced apart a distance corresponding generally to the axial length of said cylindrical objects, a bottom wall joining the lower edges of said side walls and including a panel portion integrally connected to one of said side walls and a flange portion integrally connected to the other of said side walls and arranged on top of said panel portion and secured thereto to provide a step on which said cylindrical objects are adapted to be supported in a slightly tilted condition, an end wall joining the end edges of said bottom and side walls, a bottom tear line along the juncture between said bottom and end walls, a side tear line on each of said side walls beginning and ending on the upright juncture between such side wall and said end wall and including a recessed portion intermediate its ends, the upper ends of said tear lines being above said bottom wall a distance corresponding to about the diameter of one of said cylindrical objects to be dispensed from the carton, the lower ends of said side tear lines terminating adjacent the ends of said bottom tear line, and an upper tear line on said end wall connected at opposite ends to said upper ends and contoured to form a finger having a portion which extends below the level of said upper ends, whereby the structure outlined by said tear lines is adapted to be removed leaving an opening through which said cylindrical objects may be pulled singly against the yielding restraint of said finger which acts as a detent, the tilted support of said cylindrical objects facilitating their rolling toward said openinng.

References Cited by the Examiner

UNITED STATES PATENTS

1,898,056	2/1933	Johnson	229—17
1,956,642	5/1934	Einson	229—17

FOREIGN PATENTS

240,681	8/1962	Australia.

JOSEPH R. LECLAIR, *Primary Examiner.*

FRANKLIN T. GARRETT, *Examiner.*

D. T. MOORHEAD, *Assistant Examiner.*