United States Patent

Matthey-Doret

[15] **3,699,594**

[45] **Oct. 24, 1972**

[54] **FOLDING BED**

[72] Inventor: **William Matthey-Doret,** La Verrerie, F-21, Velars sur Ouche, France

[22] Filed: **Nov. 3, 1969**

[21] Appl. No.: **873,479**

[30] **Foreign Application Priority Data**

Nov., 1968 France.....68173639
Dec., 1968 France.....68182125

[52] **U.S. Cl.**.....**5/99 R,** 5/93, 5/114
[51] **Int. Cl.**.....**A47d 9/00,** A47d 7/00, A47c 27/08
[58] **Field of Search**.....5/2, 6, 93, 98, 99, 111, 114, 5/115, 149, 152, 169, 170, 177

[56] **References Cited**

UNITED STATES PATENTS

2,738,521	3/1956	Billgren	5/99 R
2,788,528	4/1957	Hansen	5/6
3,080,573	3/1963	Marsman	5/93 X
3,206,773	9/1965	Sangsin	5/99 R
3,296,633	1/1967	Reiger	5/99 R
3,492,680	2/1970	Coolidge	5/99 R

Primary Examiner—Casmir A. Nunberg
Attorney—Robert E. Burns and Emmanuel J. Lobato

[57] **ABSTRACT**

Portable cot comprising two half-shells foldable together to form a valise. Frame members for the cot are retractable into said valise and folding feet on the half-shells are automatically positioned upon opening the frame members. The feet can also serve as carrying handles.

9 Claims, 13 Drawing Figures

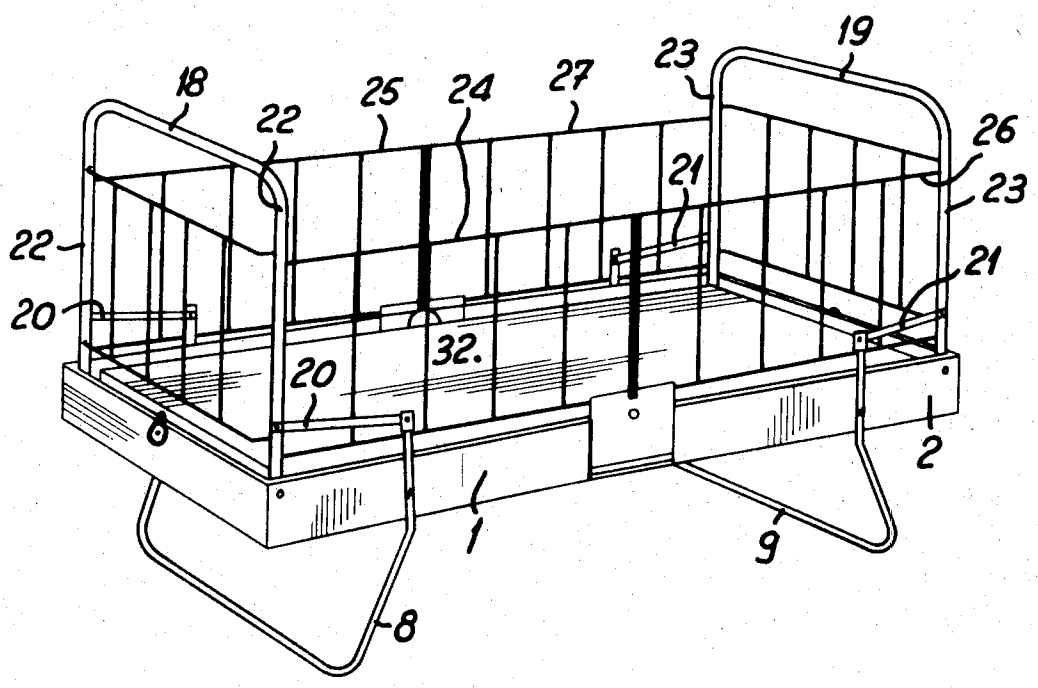

FIG.1

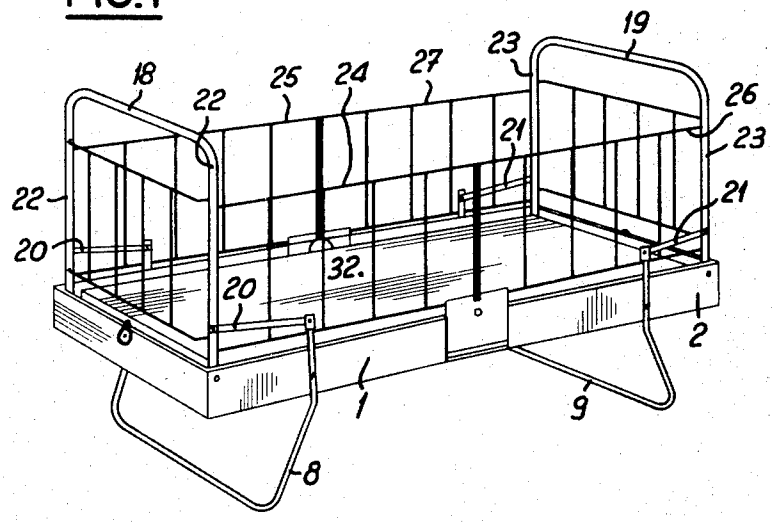

FIG.2

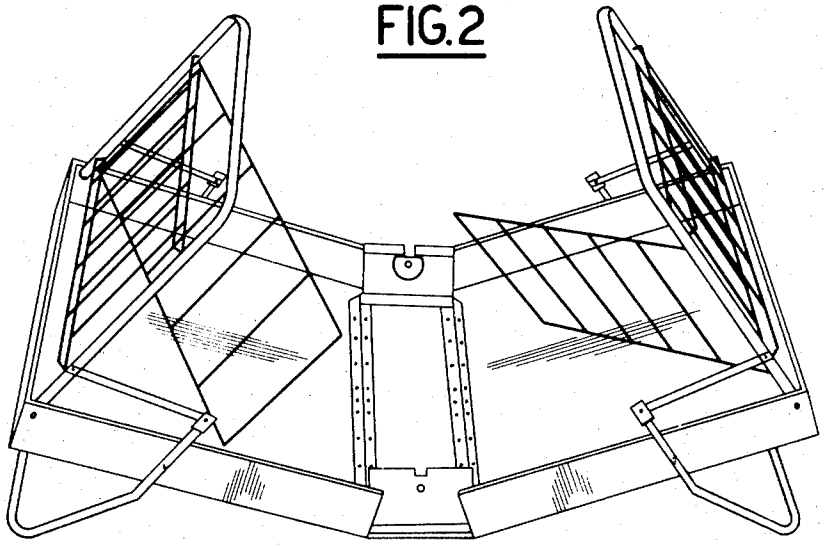

FIG. 3

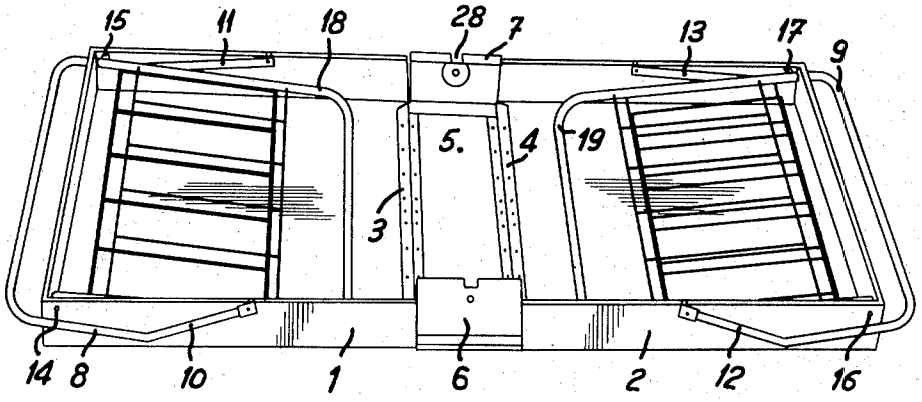

FIG. 4

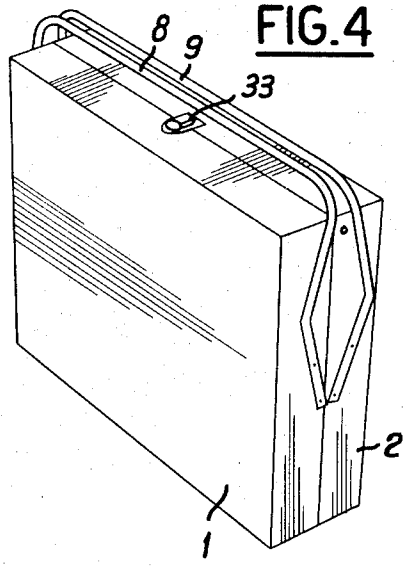

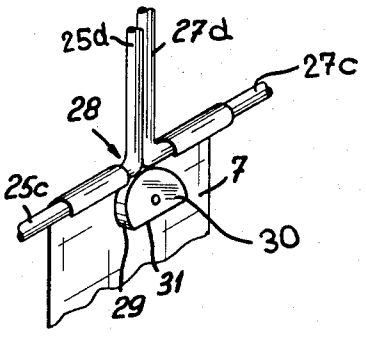

FIG. 5

FIG.6

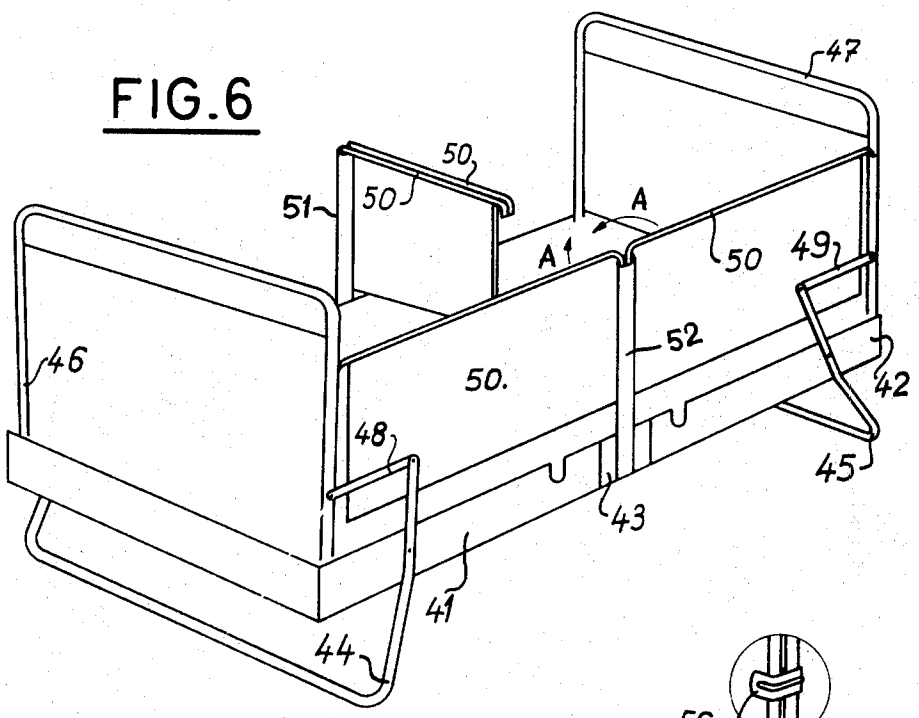
47
50
51
50
A
A1
50
49
46
50.
52
42
48
45
43
41
44

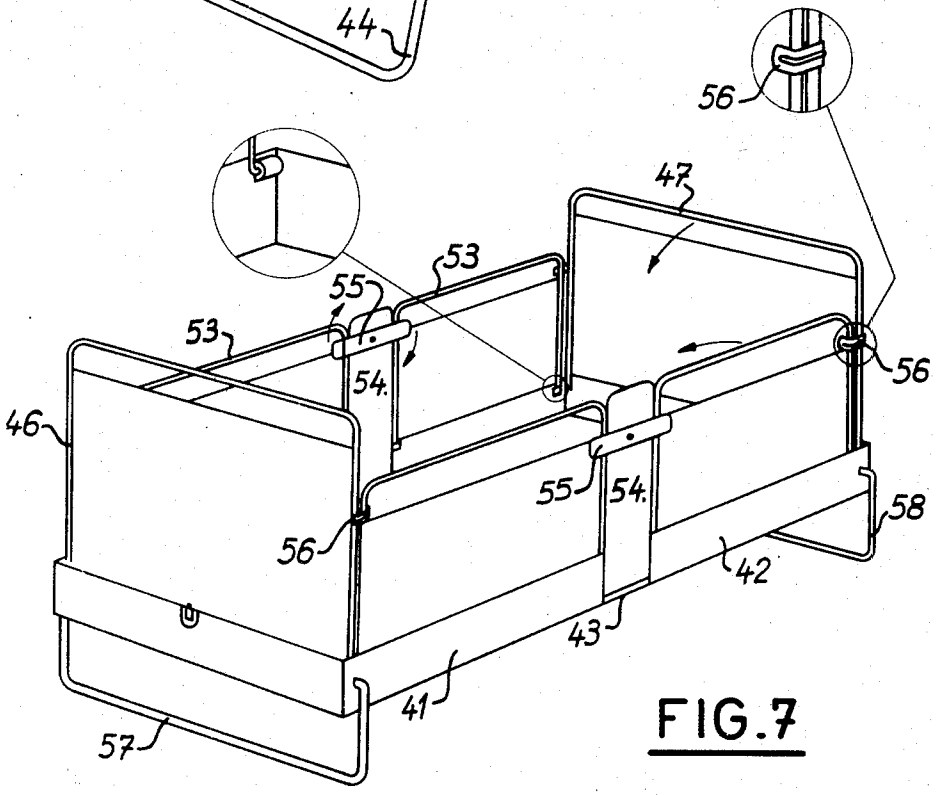
56
47
53
55
53
54.
56
46
55
54.
58
56
42
43
41
57

FIG.7

FIG.8

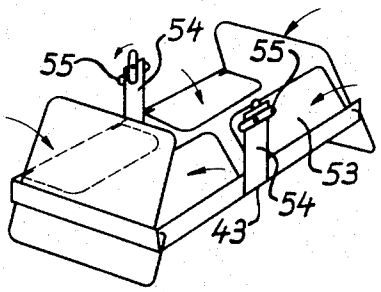

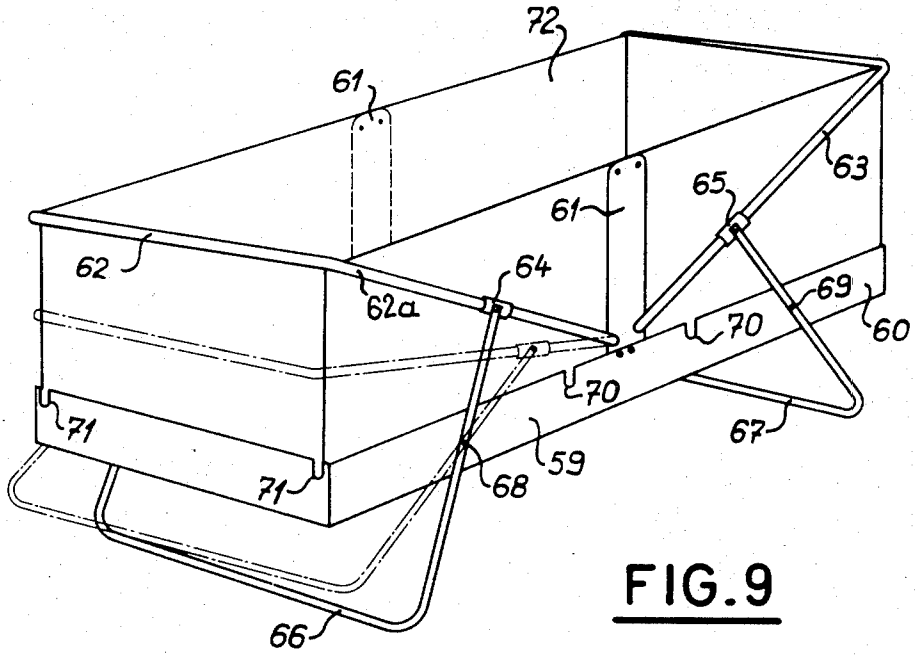

FIG.9

FIG.10

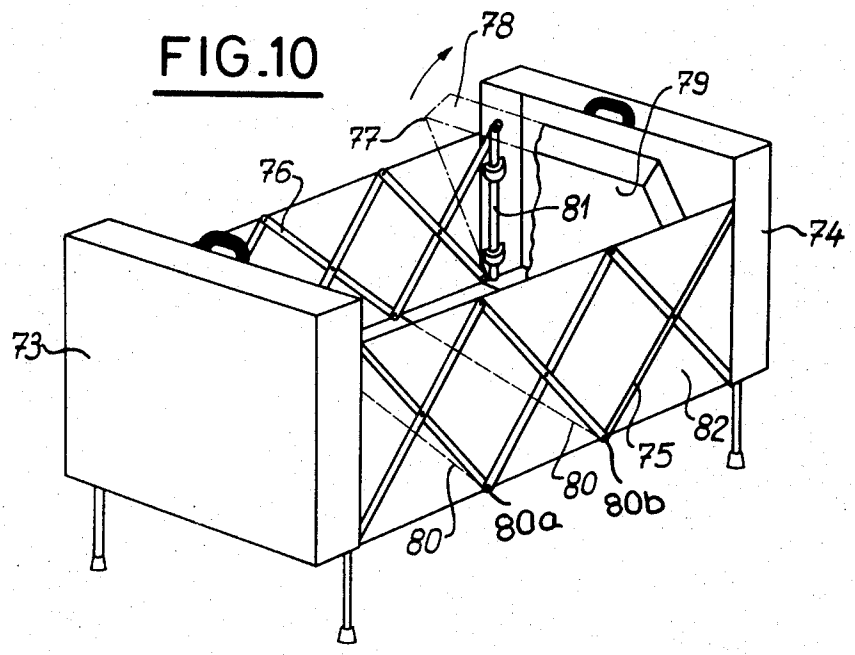
78
79
77
76
81
74
73
82
75
80
80b
80
80a

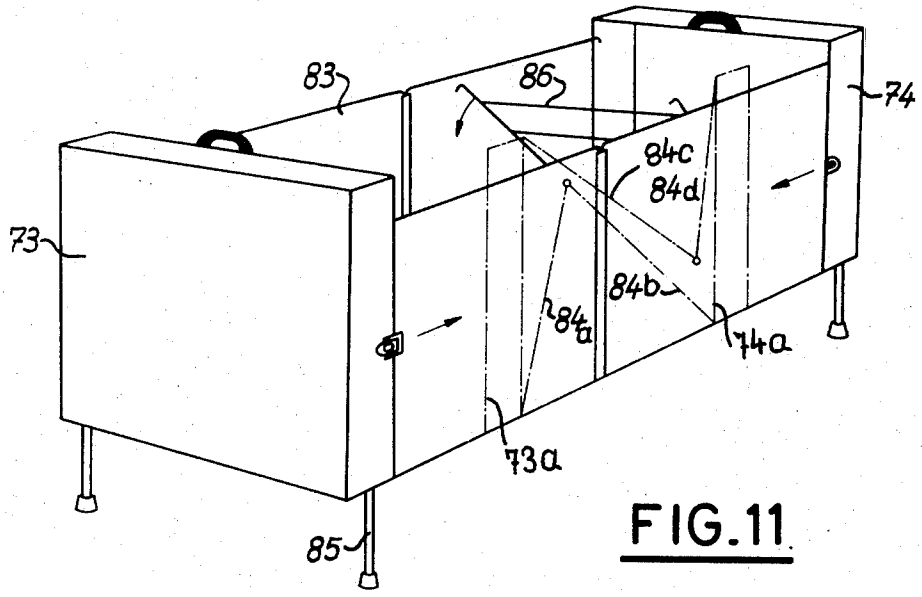
83
86
74
84c
84d
73
84b
84a
74a
73a
85

FIG.11

FIG.12

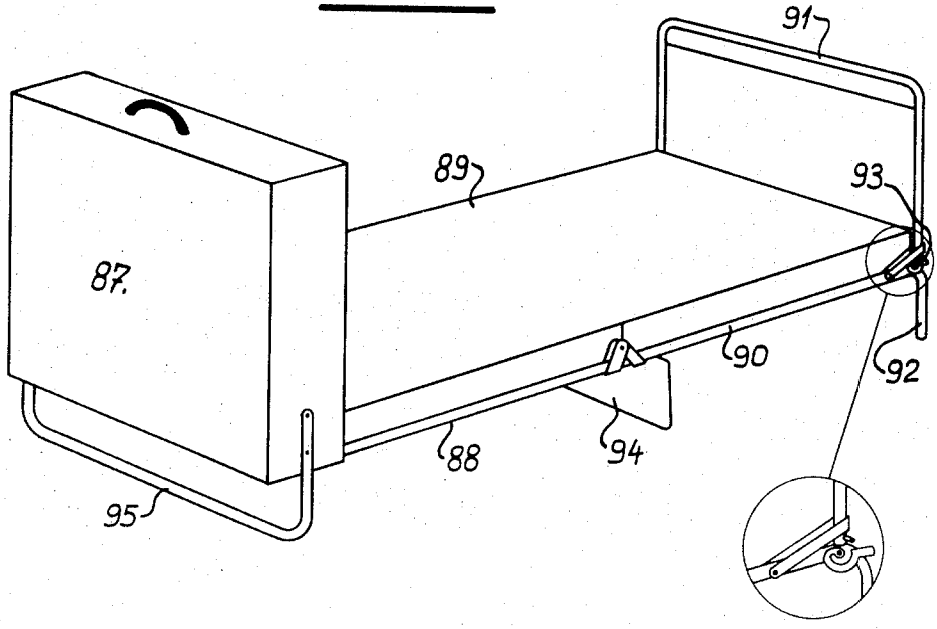

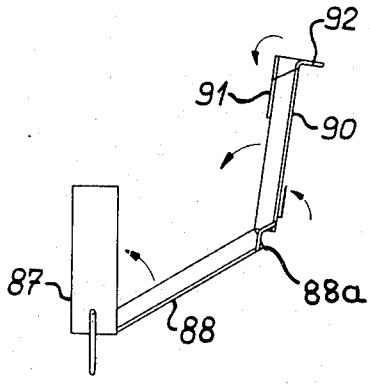

FIG.13

FOLDING BED

This invention relates to folding beds.

Known folding beds have certain drawbacks, notably mechanical complexity, inaesthetic appearance of the folded bed and, when portable, the necessity of transporting the bedding separately from the folded bed.

It is an object of the invention to provide a folding bed of simple construction portable together with the bedding, and of an agreeable aesthetic appearance both when folded and open. Such a bed is principally intended as a child's cot, but this use is not limiting.

Accordingly, the invention provides a foldable bed comprising two half-shells foldable together to form a valise, handle means to enable carrying of said valise, said half-shells each being provided with foldable frame members retractable into said valise when closed and adapted to open into frame members for the bed when open, foldable feet members on each of said half shells, and means for locking said feet in operative position.

The invention will now be described, by way of example, with reference to the accompanying drawings, in which:

FIGS. **1** to **4** are perspective views of a first embodiment with the bed in erected, partially folded, folded flat, and stored positions respectively;

FIG. **5** is an enlarged perspective view of a lock plate of the first embodiment;

FIGS. **6** and **7** are perspective views of second and third embodiments;

FIG. **8** is a perspective view of the fourth embodiment during folding thereof;

FIGS. **9**, **10**, **11** and **12** are perspective views of fifth, sixth, seventh and eighth embodiments; and

FIG. **13** is a side view of the eighth embodiment during folding thereof.

Referring to FIGS. **1** to **5**, the first embodiment of the invention comprises two rigid half-shells **1** and **2**, for example of a synthetic material, and of a shape corresponding to the two parts of a valise. The half-shells could, alternatively, be in a supple material, for example a fabric, on a rigid frame. Half-shells **1** and **2** are pivotally joined to a rigid panel **5** by means of hinges **3** and **4** respectively. Panel **5** is of slightly less width than half-shells **1** and **2** and is provided at its two ends with rigid plates **6** and **7** which fit inside the half-shells when closed.

Each half-shell has a foot member, **8** and **9** respectively, formed of a bent tube. The feet members are pivoted about axes **10** and **11**, **12** and **13** on the lateral walls of half-shells **1** and **2**. Of course, instead of using two feet members each from a single tube, four independent feet could be provided.

Each half-shell **1** and **2** is additionally provided with an end frame member **18**, **19** respectively articulated to the half-shells at **14**, **15** and **16**, **17**. The end frames are connected to the extremities of the feet members by pivoted rods **20** and **21** respectively. Consequently, when the end frame **18** (or **19**) is folded into the interior of half-shell **1** (or **2**), this movement causes folding of the foot member **8** (or **9**).

End frames **18** and **19** each have two uprights, **22** and **23** respectively, to each of which is pivotally attached a side frame member identified by reference numerals **24** through **27**, as shown in FIG. **1**.

Referring to FIG. **5**, the side frames, for example **25** and **27** as illustrated, can be locked together with plate **7**. For this purpose, the top of plate **7** is provided with two inwardly directed channels *7a* and *7b* separated by an opening **28**. Channels *7a* and *7b* are adapted to receive horizontal tubes *25c* and *27c* respectively whilst vertical tubes *25d* and *27d* lie together, tubes **25** and **27** passing through opening **28**. Below opening **28**, a cam **29** is pivotally fixed at **30** on plate **7** and is rotatable by means of a button, not shown, on the outside of plate **7**. The cam, for example of synthetic material, is partially of circular shape and has a flat **31** so that when the button is turned so that flat **31** faces opening **28**, tubes *25c* and *27c* can be pushed down and removed from or inserted in channels *7a* and *7b*. When tubes *25c* and *27c* are thus placed in the channels *7a* and *7b* the button can be turned so that the circular cam surface presses tubes *25c* and *27c* against the channels *7 a* and *7b* thereby positionally locking the side and end frame members and, additionally, feet members **8** and **9**. Side-frame members **24** and **26** are similarly locked so that the cot can be simply and rapidly locked in its open position.

Of course, other locking devices are possible and could act on the side or end frame members, on the feet members, or on the half-shells **1** and **2**, or be a combination of any of these means.

The operation of folding up the cot can easily be understood by considering FIGS. **1**, **2**, **3** and **4** in turn. Firstly the locking devices, such as described with reference to FIG. **5**, are unlocked and side frame members **24**, **25** and **26**, **27** are folded adjacent to their respective end frame members **18** and **19** as shown in FIG. **2**. End frame members **18** and **19** are then folded flat onto half-shells **1** and **2** as shown in FIG. **3**. The two half-shells are then folded together to form a valise and are locked with a standard releasable fastener **33**, as shown in FIG. **4**. This latter operation brings feet members **8** and **9** adjacent one another so that they form a handle suitable for carrying the valise.

The bedding **32** is schematically shown on FIG. **1** and is not shown on FIGS. **2** and **3**. However, it is understood that the bedding can remain in the cot during the folding and unfolding operations so that the cot, folded into a valise, can be carried with the bedding protected both from the weather and from the possibility of soiling.

Referring now to FIG. **6**, there is shown a cot formed from two half-shells **41** and **42** foldable about a central panel **43**. Feet members **44** and **45** are pivoted on half-shells **41** and **42** and are connected to foldable end-frame members **46** and **47** by pivoted arms **48** and **49** respectively. Two pairs of identical side-frame members **50** are each pivotally attached to hinge members **51** and **52** which are solidly fixed perpendicularly to the ends of panel **43**.

When the cot is opened out, the free ends of side frame members **50** are attached by any suitable means to the uprights of end frames **46** and **47**, thereby locking the cot in its erected position. To store away the cot, the side frame members **50** are pivoted to their central position, as indicated by arrows A, the end frame members **46** and **47** are then folded flat onto the half-shells **41** and **42**, and the two half-shells are folded together, as for the first embodiment.

Referring to FIGS. 7 and 8, for this embodiment the end frame members 46 and 47 and four side frame members 53 are all pivoted about horizontal hinge members on the corresponding edges of the half-shells 41 and 42. The central panel 43 has two vertical uprights 54 provided with means 55 which enable locking of the side frame members. Clips 56 are additionally provided on the end frame members 46 and 47 to enable clipping of side frame members 53 thereon.

Feet members 57 and 58 are pivotable about the same axes as end frame members 46 and 47 and advantageously are rigidly connected to their end frame member. Of course, the same system of positioning the feet could be used with other arrangements for the side frame members.

Referring to FIG. 9, two half-shells 59 and 60 are pivotally joined to a central panel (not shown) carrying two uprights 61. Two U-shaped tubular frame members 62 and 63 are pivotally fixed, at their ends, to the uprights 61. On the side arms 62*a* and 63*a* of the frame members are provided slidable runners 64 and 65. Feet members 66 and 67 are pivoted to the half-shells at 68 and 69 respectively and to the runners 64 and 65. Therefore, raising or lowering frame member 62 causes raising or lowering of foot member 66 and similarly for frame member 63 and foot member 67. Nicks 70 and 71 are provided in the walls of the half-shells to enable passage, when the half-shells are folded, of the join of the feet members with the runners and the tubular frame members 62 and 63.

A skirt 72, for example in a canvas fabric, is carried by frame members 62 and 63 and uprights 61, the skirt forming the walls of the cot when erected.

The embodiment illustrated in FIG. 10 comprises two half-shells 73 and 74 connected to one another by lateral expansible frames 75 and 76 comprising a plurality of articulated arms. A half-mattress is foldable into each half-shell, only one half-mattress 77 with a rigid base 79 being shown. Cross beams 80 are attached to each intermediate lower articulations 80*a* and 80*b* of the pairs of arms. Feet 81 are capable of sliding into the half-shells and are connected to the articulated arms in such a way that approaching the two half-shells together causes entry of the feet whilst separation of the half-shells causes protrusion thereof. Suitably, for this purpose the feet are mechanically linked to the upper extremities of the end arms which are free to move vertically in the half-shells, the lower extremities of the end arms being fixed. Preferably, frames 75 and 76 are covered with a canvas fabric 82.

FIG. 11 shows a variation of the embodiment of FIG. 10, in which the half-shells 73 and 74 are joined by deformable lateral frames covered with a canvas fabric 83. The half-shells are shown at an intermediate position (73*a*, 74*a*) in dotted-dashed lines, where the intermediate positions of articulated pairs of arms 84 (84*a* and 84*b*, 84*c* and 84*d*) are also seen. The arms 84*a* and 84*b*, 84*c* and 84*d* can be of different lengths.

Feet 96 are retractable in any suitable manner into the half shells and are provided with locking means (not shown) to fix them in the open position. Two half-mattresses 86 can be stored in the half-shells and can be folded down onto the base of the bed to lock it in open position.

The bed shown in FIGS. 12 and 13 has one half-shell 87 forming the body of the valise, the other half-shell 88 articulated on half-shell 87, forming a cover. The cover 87 supports, in the open position a part of mattress 89, the other part of which is supported by a base member 90 pivotally mounted to the edge 88*a* of the cover. Base member 90 also has a foldable frame member 91 and feet 92. A locking device 93 is provided for frame member 91. A foldable foot member 94 is provided on base member 90 to support the middle part of the bed, whilst foot member 95 fixed to the body 87 can be used to carry the folded bed.

What is claimed is:

1. A foldable bed comprising a central panel, two half-shells pivotable about hinges on opposite edges of said central panel, uprights at opposite ends of said central panel, said uprights being spaced apart a distance less than the width of said half-shells so that said uprights are located inside said half-shells when the bed is folded up, end frame members pivotally mounted on the sides of said half-shells opposite said hinges, two side frame members pivoted on each said upright and extending to said end frame members when the bed is unfolded, foldable feet members on said half-shells, and means for locking said bed in unfolded position.

2. A foldable bed according to claim 1, wherein said feet members are interconnected with said end frame members so as to extend downwardly from said shell members when said end frame members are in operative position.

3. A foldable bed according to claim 2, wherein said feet members comprise U-shaped members pivotally connected at opposite sides to said half-shells and swingable to a position to be used as handles when said half-shells are hinged to closed position.

4. A foldable bed comprising a central panel, two half-shells pivotable about hinges on opposite edges of said central panel, a U-shaped tubular member for each half-shell pivoted at its ends on said central panel, flexible walls for said bed carried by said U-shaped members and limiting the pivoting movement of said members, a foot member articulated on each half-shell and articulated sliding runners on arms of said U-shaped members for the respective half-shell so that folding said U-shaped member causes folding of said foot member.

5. A foldable bed according to claim 4, wherein each said foot member is U-shaped with opposite ends articulated to said sliding runners, said U-shaped foot members being foldable into a position to serve as handles when said half-shells are hinged to closed position.

6. A foldable bed comprising two half-shells which are foldable together and unfoldable apart by translational movement, a plurality of articulating side frame members joining said half-shells and folding into said half-shells when said half-shells are moved together, said articulating side frame members comprising a plurality of pairs of articulated arms, each pair of arms being articulated at its mid-point and adjacent pairs of arms being articulated at the extremities thereof, handle means for carrying said bed when said half-shells are moved together, retractable feet members on said half-shells and means for locking said bed in operative position.

7. A foldable bed according to claim **4**, wherein said half-shells are provided with notches for passage of said tubular U-shaped members and the articulation of said sliding runners when said bed is in the folded state.

8. Bed according to claim **6**, wherein said feet members are slidingly mounted in said half-shells, their removal or insertion in said half-shells being actuated by moving said half-shells apart or together respectively.

9. Bed according to claim **6**, wherein said articulating side frame members comprise pairs of arms articulated together at one extremity thereof and articulated to a half-shell at the other extremity thereof.

* * * * *