Nov. 20, 1956 C. F. HAMMOND ET AL 2,771,221

LIQUID CONTAINER

Filed Jan. 2, 1953 4 Sheets-Sheet 1

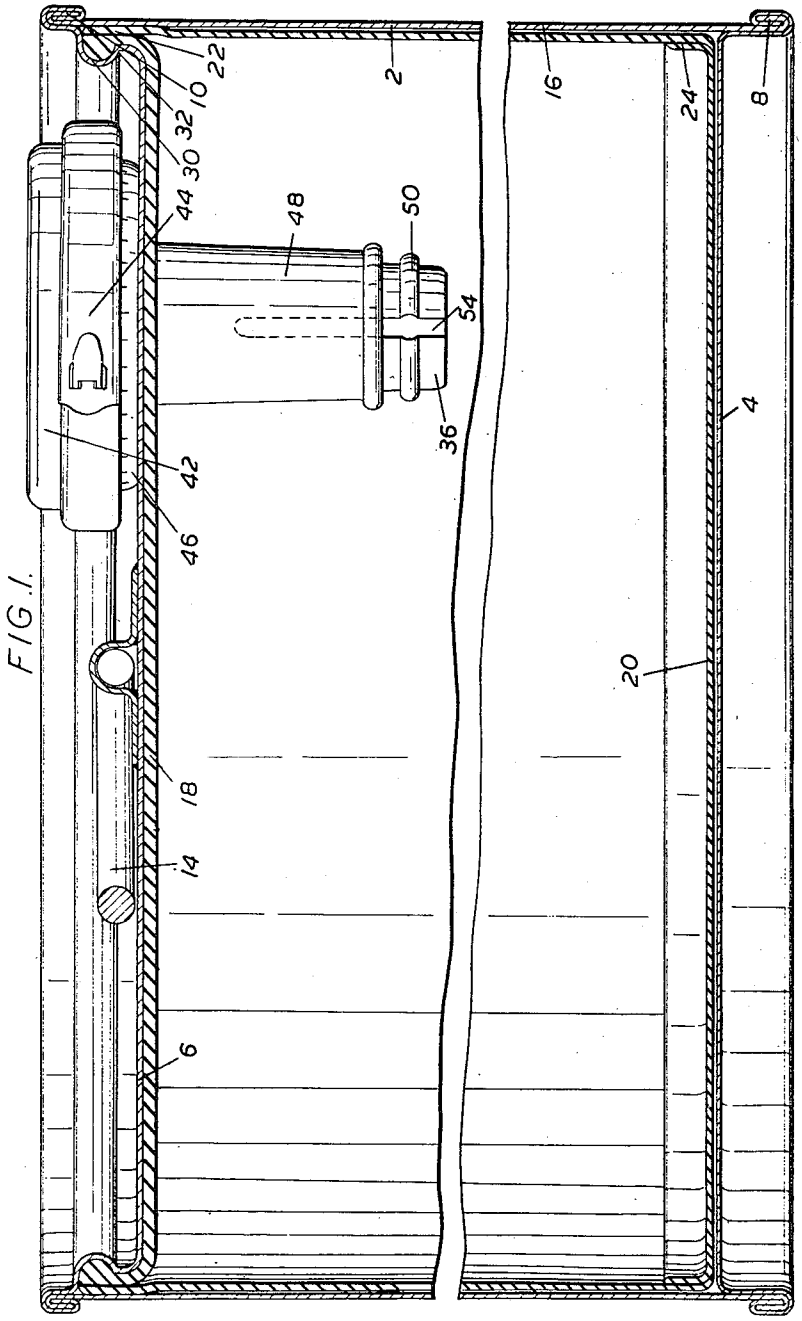

FIG. 1.

Inventors
CECIL FEATHERSTONE HAMMOND,
WILLIAM SHACKLETON,

By

Attorney

Nov. 20, 1956 C. F. HAMMOND ET AL 2,771,221

LIQUID CONTAINER

Filed Jan. 2, 1953 4 Sheets-Sheet 2

FIG. 2.

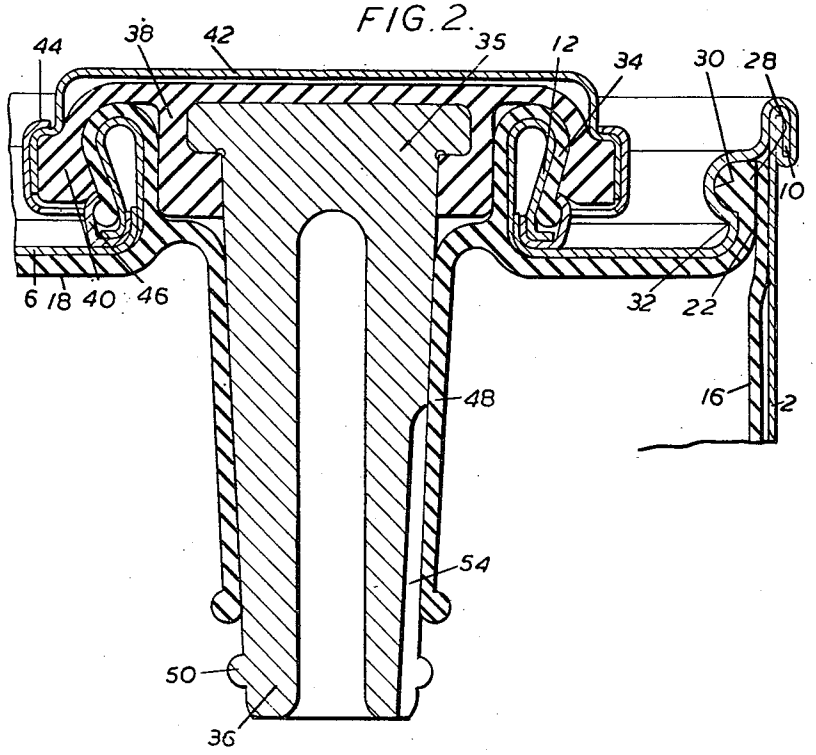

FIG. 3.

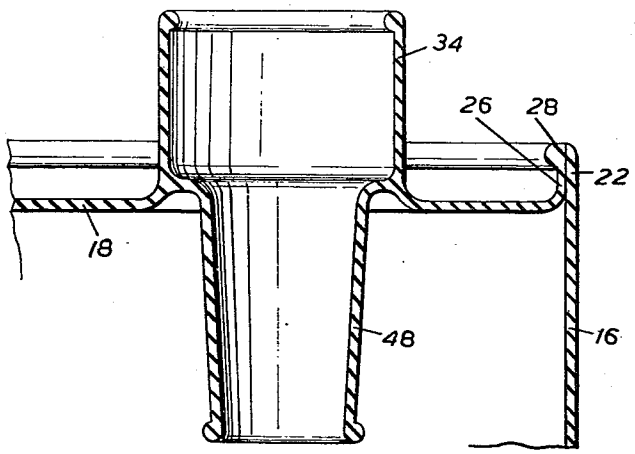

Inventors
CECIL FEATHERSTONE HAMMOND,
WILLIAM SHACKLETON,
By
Robert B Larson
Attorney

Nov. 20, 1956 C. F. HAMMOND ET AL 2,771,221

LIQUID CONTAINER

Filed Jan. 2, 1953 4 Sheets-Sheet 3

FIG. 4.

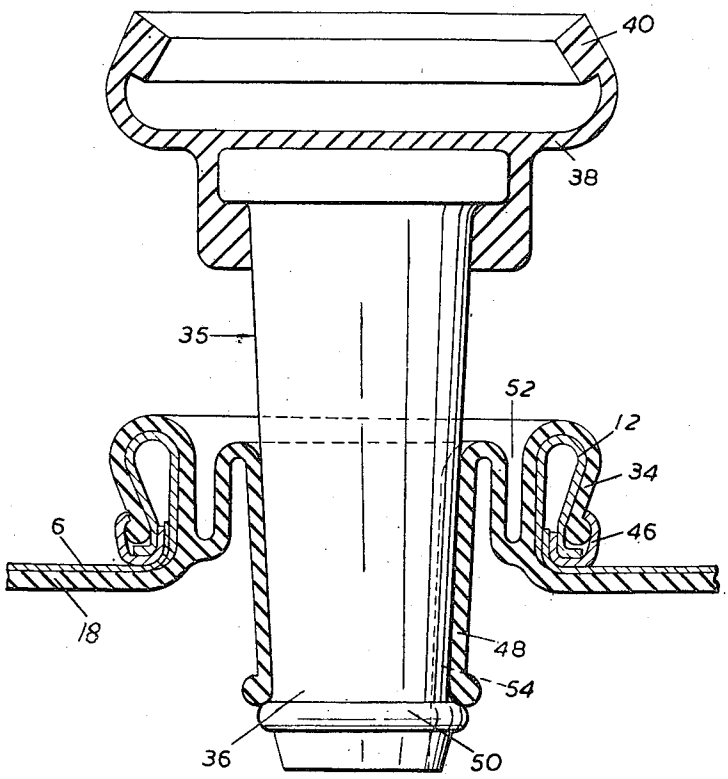

FIG. 7.

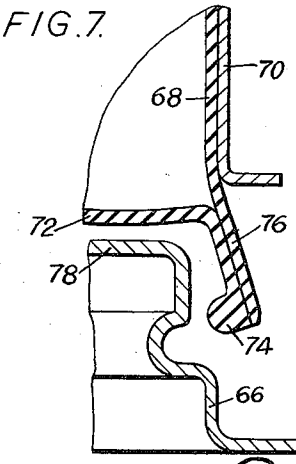

Inventors
CECIL FEATHERSTONE HAMMOND,
WILLIAM SHACKLETON,

By

Robert B Pearson

Attorney

Nov. 20, 1956 C. F. HAMMOND ET AL 2,771,221

LIQUID CONTAINER

Filed Jan. 2, 1953 4 Sheets-Sheet 4

FIG. 5.

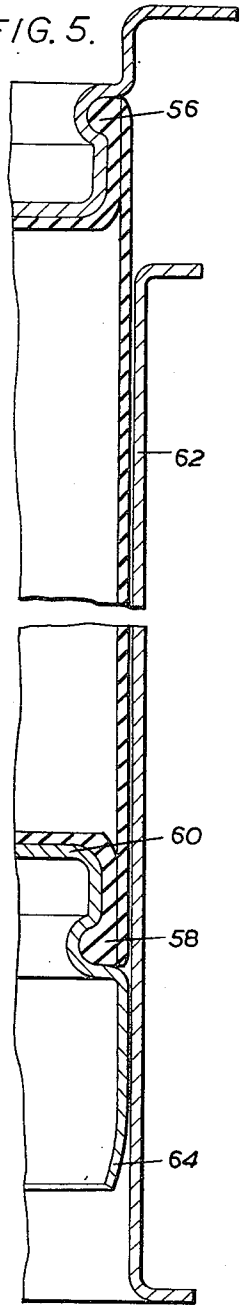

FIG. 6.

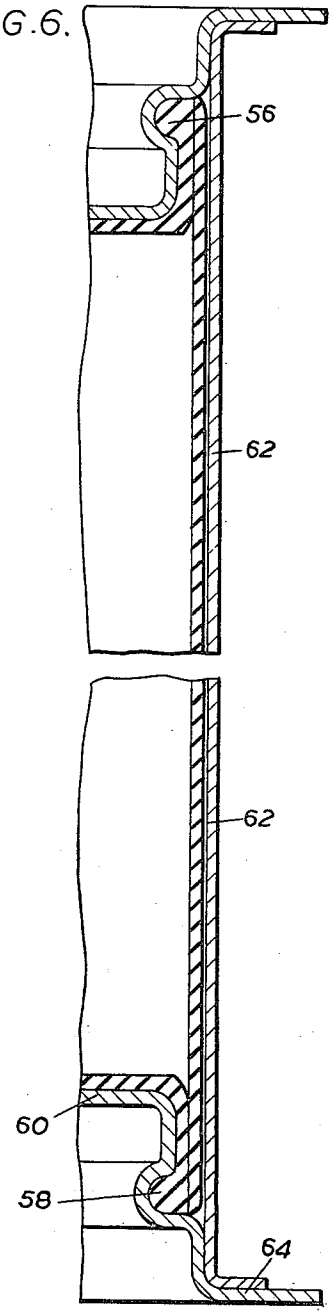

Inventors
CECIL FEATHERSTONE HAMMOND,
WILLIAM SHACKLETON,

By Robert B Pearson

Attorney

United States Patent Office 2,771,221 Patented Nov. 20, 1956

2,771,221

LIQUID CONTAINER

Cecil Featherstone Hammond and William Shackleton, London, England, assignors of one-half to Lining Components Limited, London, England, a British company; said Cecil Featherstone Hammond, administrator of said William Shackleton, deceased

Application January 2, 1953, Serial No. 329,334

6 Claims. (Cl. 222—111)

Sheet metal drums form convenient containers for the transport and storage of liquids, but their use for corrosive liquids has been restricted by difficulty in devising a cheap and effective resistant lining which will protect the metal of the drum from the liquid even if the metal is dented.

Various containers have been proposed having a lining of a flexible material, such as rubber or polythene, but these have either involved the use of an outer container differing radically from the shell of an ordinary drum or have been unreliable in use. In particular it has been found that if a polythene bag is inserted in an ordinary metal drum shell, and is positively anchored only around the opening in the drum, there is a danger of the bag turning within the shell and ultimately being torn open at the neck.

It is an object of the present invention to provide a metal drum with a resistant lining which will survive rough handling of the drum.

It is a further object to provide a lining which can be incorporated in a metal drum which does not differ greatly from drums at present commonly made.

It is a further object to provide an improved pouring spout in association with a resistant lining for a metal drum.

In attaining these objects the sheet metal shell of a drum is lined by a bag of a flexible material, such as rubber or polythene, which is anchored to the drum all round its upper edge where the head of the drum joins the body. Preferably the bag is anchored to the shell solely by inter-fitting parts. Preferably, moreover, the bag is attached to the head before being inserted into the body. The bag may be formed at the junction of its top and barrel with a beaded rim which engages a groove in the spigot of the head, and which in the completed drum is held in place by the body of the shell.

Preferably air is expelled from between the bag and the shell walls so that the bag in effect clings to the interior of the shell under atmospheric pressure. This may be effected by expanding the bag progressively into contact with the shell before the seams are all closed in an airtight manner. The anchorage of the bag to the drum comes into play principally if the shell is damaged so that it is no longer airtight.

In large drums which are likely to be handled by rolling on their sides, the lining may be anchored to the drum around the bottom in the same way as it is anchored around the head.

Furthermore in attaining the objects of the invention, a drum for the transport and storage of liquid comprising a sheet metal shell lined by a bag of flexible material has attached to the bag a tubular part forming an invertible spout capable of being drawn from inside the drum through an opening. Preferably the opening is closed by a bung, part of which fits inside the tubular part when this is inside the drum and is shaped to engage the tubular part and pull it into the outer or pouring position on removal of the bung. This form of spout is intended for use on small drums which are emptied by tipping by hand, and is not intended for larger drums which are emptied by vacuum or blowing or through a non-corrosive tap.

The invention also concerns bags suitable for use as linings of drums according to the invention.

The accompanying drawings show two examples of drums embodying the present invention. In these drawings:

Figure 1 is a vertical section through a 5 gallon drum;

Figure 2 is a vertical section on a larger scale of part of the drum with an opening closed by a bung;

Figure 3 is a vertical section of part of the rubber lining of the drum before it is fitted in place;

Figure 4 is a vertical section of the bung partly withdrawn from the opening;

Figures 5 and 6 are longitudinal sections of part of a 40 gallon drum in the course of assembly; and

Figure 7 is a fragmentary longitudinal section of a 40 gallon drum in the course of assembly by a different method.

The 5 gallon drum illustrated by Figures 1 to 4 has a metal shell comprising a body **2**, and a dished bottom **4** and head **6** which in the completed drum are held to the body by folded double seams **8** and **10**. There is an opening in the head, surrounded by a turned-over rim **12**. In addition a carrying handle **14** is hinged to the head. This shell differs from an ordinary drum only in the depth and shape of the spigot of the head.

The drum has as lining a rubber bag formed of a cylindrical wall **16**, a top wall **18** and a bottom wall **20**. Before the lining is inserted in the drum these three parts are vulcanised together at **22** and **24**. The resutlant complete lining has a rim **26** around its upper corner, and the free edge of the rim is formed with an internal bead **28**.

In assembly the completed lining is attached to the head **6** of the metal shell by pressing the top of the lining against the underside of the head and snapping the bead **28** into a groove **30** in the spigot **32** of the head. A tubular extension **34** on the top of the lining is drawn through the opening in the head and turned down over the rim **12** of the opening.

Then the lining is lowered into the rest of the shell, comprising the body **2** and bottom **4** already seamed together. Air is expelled from between the lining and the shell by pouring water into the lining, and then the flange on the head is folded over with the flange on the body to form the seam **10**. Before the seams **8** and **10** are closed, opposed surfaces are coated with lacquer to render the seams airtight.

The opening in the drum is closed by a bung **35** composed of a corrosion resistant plug **36** fitted into a rubber cap **38**. When the drum is closed, a flange **40** on the cap is turned down over the lining extension **34**, and the cap is protected by a metal cover **42** held in place by an overseal in the form of a metal band **44**. When the bung is to be withdrawn, the band and cover are removed and the flange **40** is turned upwards. A retaining ring **46** with inturned claws prevents displacement of the edge of the lining extension **34**.

The plug **36** cooperates with a pourer spout **48**. As the bung is withdrawn, a rib **50** on the plug engages the spout and progressively inverts it so that when the bung is clear of the drum the spout is directed outwards. When the bung is replaced the spout is returned into the drum. Any liquid which runs down the outside of the spout during pouring collects in a trough **52** defined by the spout and the lining extension **34**, and as the bung is replaced this liquid drains back into the drum through a groove **54** which extends part way up the side of the plug. In order to show this groove, the bung is shown in different rotational positions in the different figures.

In the 40 gallon drum illustrated by Figures 5 and 6,

the lining is held to the shell by integral, internally beaded rims 56 and 58 at both ends. The assembly of the upper part of the drum is identical with that of the 5 gallon drum. The bottom 60 of the shell of the 40 gallon drum has, however, to be passed through the body 62 of the shell. Accordingly, the initial shape of the bottom is that shown in Figure 5. The edge 64 is then thrown outwards to form a flange as shown in Figure 6, and is finally folded over to form a seam.

Alternatively, as shown in Figure 7, passing the bottom 66 through a 40 gallon drum can be avoided by inflating the lining 68 after insertion into the body 70 of the shell. This causes the bottom wall 72 to project out of the body and become somewhat domed, and as a result the bead 74 on the lower rim 76 of the lining is stretched. The bottom 78 of the shell is pushed against the lining and into the end of the body 70, and the bottom seam is made. As the lining is inflated and thereafter the bottom 78 is pushed into place, air is expelled from between the lining and the shell.

It is also possible to assemble in this way a drum having no bottom anchorage to the lining. That is to say in the assembly of a 5 gallon drum, such as that shown in Figure 1, the lining may be inserted into the body of the shell before the bottom of the shell is in place. Then the lining is inflated, the bottom of the shell is pushed into place, and the bottom seam is made. Conveniently during this operation the opening in the lining is closed by a special plug incorporating a non-return valve through which the lining can be inflated.

A lining which is anchored to a shell solely by interfitting parts can be recovered from a shell by cutting away the seams of the shell and separating the components. This enables the lining from a shell to be reused, for example if the shell is dented but the lining is intact.

The constructions described in detail may be modified in a number of ways. Thus the lining, either of rubber, or other material such as polythene, may be of parts cemented rather than vulcanised together, or may be moulded in one piece after the manner of a hot water bottle.

It is also possible to dispense with a bead on the rim or rims of the lining and to secure such rims to the head or bottom of the shell by a binding holding the rim in engagement with a groove or a roughened surface.

We claim:

1. A drum for the transport and storage of liquid comprising a sheet metal shell, including a body, a head and a bottom, in combination with a lining in the form of a bag of flexible material, said shell being formed with an opening, and said bag including a tubular part integral with said bag and aligned with said opening and adapted to be completely inverted through said opening to form a spout and to be returned through said opening.

2. A drum as claimed in claim 1 in combination with a bung, including a plug adapted to fit within said tubular part when said tubular part is directed into said drum and to draw said tubular part outwards as said bung is withdrawn from said drum.

3. The combination claimed in claim 2 wherein said opening is lined by a tubular extension of said lining, and said tubular part when directed out of said drum defines with said tubular extension a substantial trough surrounding said tubular part to collect any liquid running down the outside thereof, and said plug is formed with a passage along which liquid can pass from said trough to the interior of said drum as said tubular part is forced into said drum by insertion of said bung.

4. A method of manufacturing a drum for the transport and storage of liquid from a sheet metal body, head and bottom, and from a lining in the form of a bag of flexible material, including a circumferential wall, and top wall and a bottom wall, integral with one another and with an internally beaded rim extending from the junction of said cylindrical wall and said top wall, comprising, the successive steps of fitting said top wall of said lining to said head and fitting the bead on said rim into a groove in said head, inserting said lining in said body until said head engages said body, and securing said head and body together, combined with the successive steps of fitting said bottom to said body and securing said bottom and body together.

5. A liner for metal drums, said liner being a container of a flexible material, and comprising a circumferential wall, a top part and bottom part fused and integral with said circumferential wall, and with a rim extending upwardly from the junction of said circumferential wall and said top wall, said rim having an internal bead of normally unstressed material integral with said rim.

6. A lining as claimed in claim 5, and including a second internally beaded rim extending from the junction of said circumferential wall and said bottom part.

References Cited in the file of this patent

UNITED STATES PATENTS

1,190,612	Weil	July 11, 1916
1,452,039	Gravell	Apr. 17, 1923
1,575,681	Griffiths	Mar. 9, 1926
1,591,373	Griffiths	July 6, 1926
1,778,532	Meiklejohn	Oct. 14, 1930
2,065,293	Scudder	Dec. 22, 1936
2,145,613	Shenk et al.	Jan. 31, 1939
2,177,919	Vogt	Oct. 31, 1939
2,561,596	Rieke	July 24, 1951

FOREIGN PATENTS

430,256	Great Britain	June 7, 1935