United States Patent [19]

Morgan

[11] **3,779,034**

[45] **Dec. 18, 1973**

[54] **COOLING TRANSPORT MECHANISM**

[75] Inventor: **Hubert Davies Morgan,** Papcastle, England

[73] Assignee: **British Steel Corporation,** London, England

[22] Filed: **May 3, 1972**

[21] Appl. No.: **249,865**

[30] **Foreign Application Priority Data**

May 7, 1971 Great Britain 13,732/71

[52] **U.S. Cl.** ..... **62/381,** 198/33 AD

[51] **Int. Cl.** **F25d 25/02**

[58] **Field of Search** ..... 62/62–64, 373–376, 381; 198/33 AD

[56] **References Cited**

UNITED STATES PATENTS

1,573,232	2/1926	Ekstrom	198/33 AD
2,942,429	6/1960	Van Dolah et al.	62/381 X
2,630,221	3/1953	Stewart	198/33 AD

Primary Examiner—Meyer Perlin
Assistant Examiner—Ronald C. Capossela
Attorney—Joseph F. Brisebois et al.

[57] **ABSTRACT**

This invention relates to a mechanism for transporting steel sections through quenching tanks as they leave the finishing mill in a hot state.

The invention provides a cylindrical framework rotatable in a housing and having a number of sets of arms outstanding from its periphery. A fixed arcuate rack is interleaved with these arms and extends from an exit station on one side of the framework towards an entry station on the opposite side. The arrangement is such that the steel billets/slabs are individually deposited on the trailing faces of selected sets of the arms at the entry station and as the framework rotates they are carried downwardly towards the rack and then driven upwardly along it by the leading faces of the succeeding set of arms, the rake of these arms at the exit station being such that they are discharged under gravity to a stacker mechanism.

12 Claims, 2 Drawing Figures

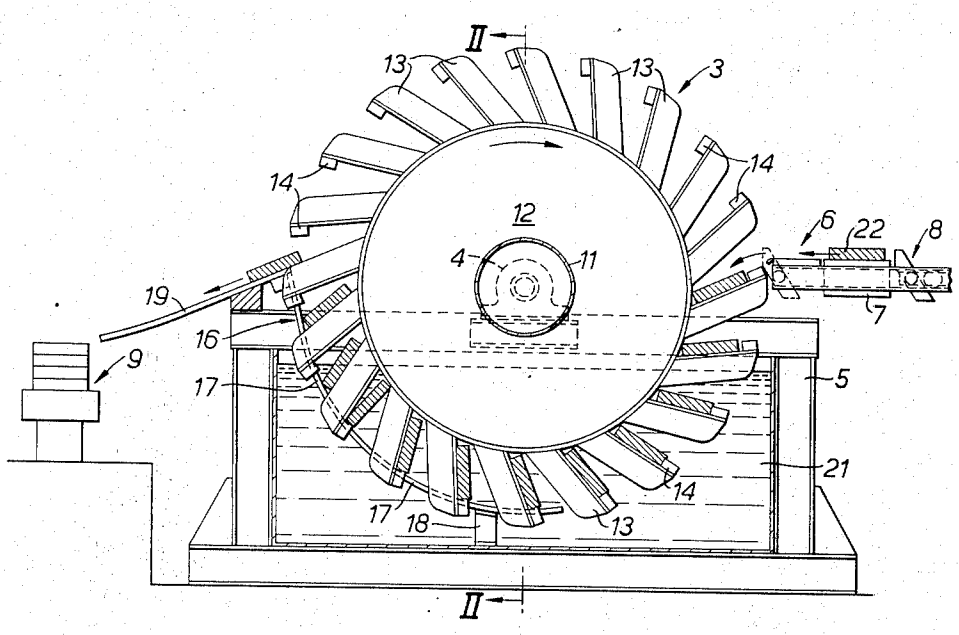

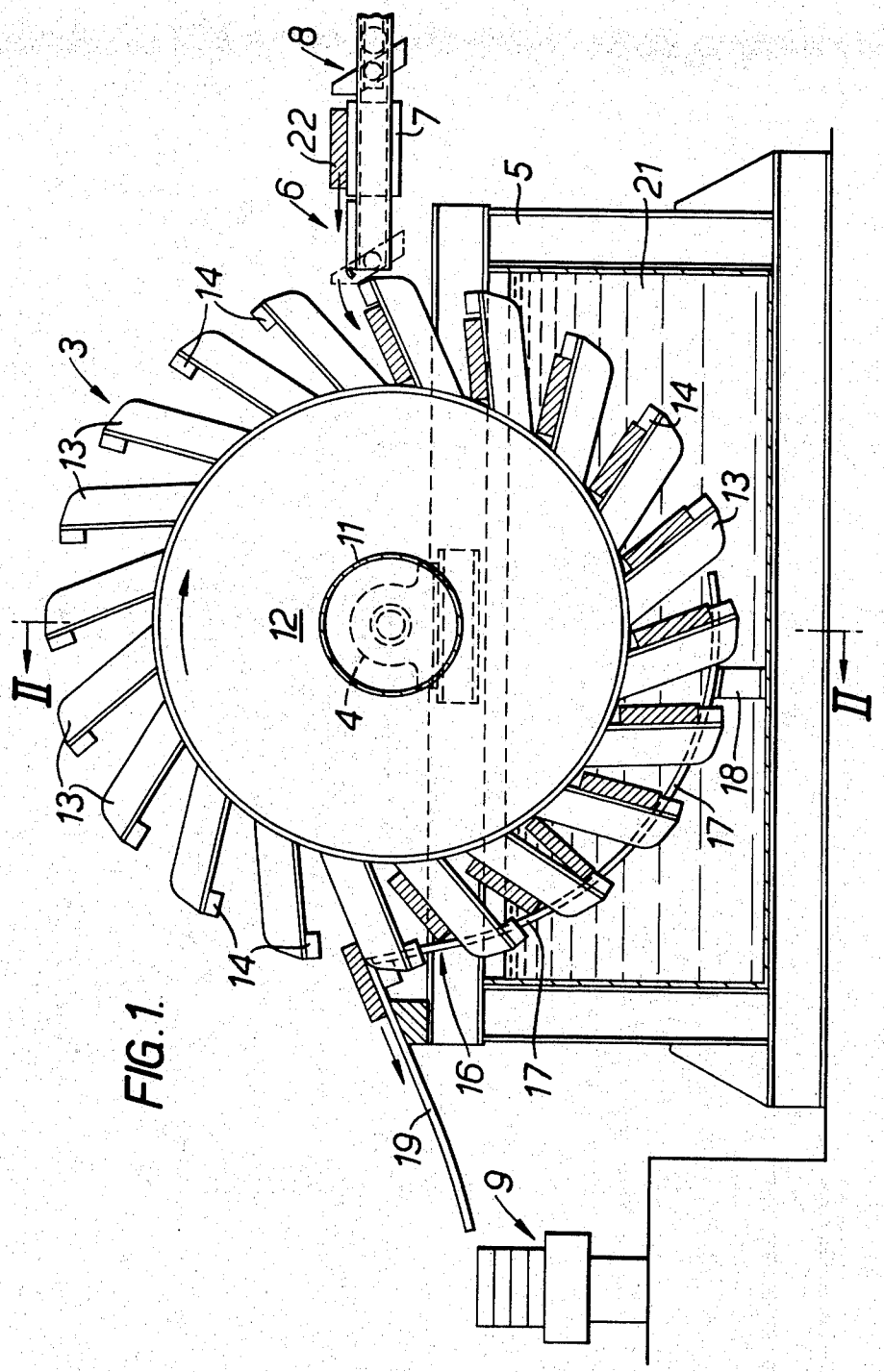

FIG. 1.

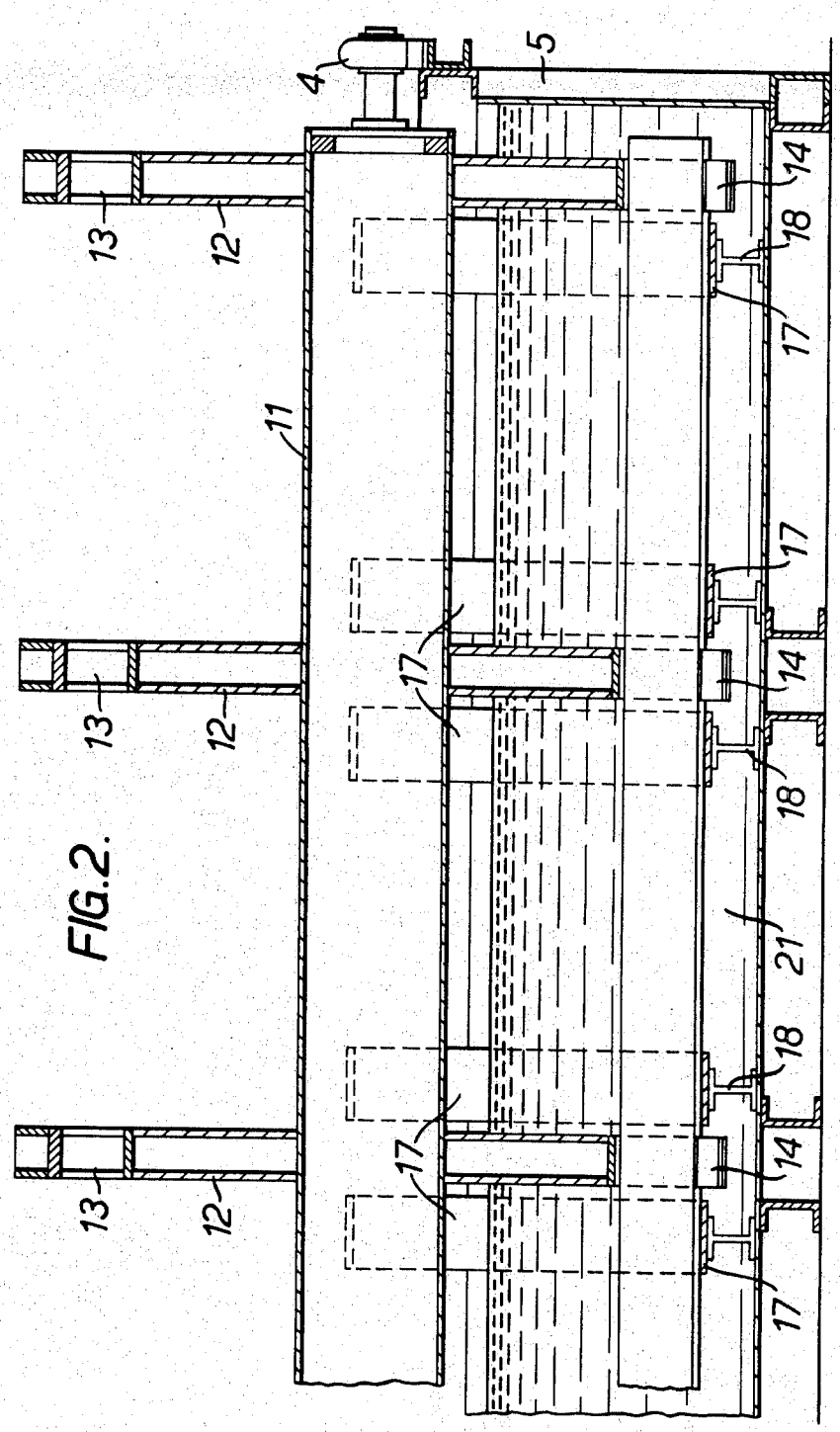

FIG. 2.

COOLING TRANSPORT MECHANISM

This invention relates to transport mechanism, and more particularly relates to a mechanism for laterally transporting elongate members, e.g. steel billets or slabs. The invention is of particular utility in transporting such steel sections through quenching tanks as they leave the finishing mill in a hot state.

In this latter regard billets or slabs are usually transferred by chain conveyor from the roller table into and through the quenching tank before stacking, or in some cases by a rotatable drum having discrete radial receptacles for the steel sections which are retained in place by pivotal latches.

As will be appreciated, during this quenching stage, scale is deposited from the steel sections forming a highly abrasive sludge in the bottom of the tank and as this builds up, the chains, or the drum (together with the latches) may be dragged through it rendering them vulnerable to corrosion abrasion and, particularly the moving parts, to clogging. Furthermore, the chains are continually subjected to repeated thermal cycling in the nature of their duty in handling steel sections at temperatures of up to 1,000° C and, particularly as regards the drum receptacles, rectangular steel sections tend to enter the quenching medium at an acute angle so that they are subject to a differential in temperature across their major surface, sometimes for an appreciable time, leading to an undesirable gradation in cooling.

It is an object of this invention to provide an improved transport mechanism which mitigates these disadvantages.

The present invention consists in a mechanism for laterally transporting elongate members, comprising a cylindrical framework rotatable in a housing and having a plurality of sets of arms regularly spaced around, and outstanding from, it periphery, and a fixed arcuate rack interleaved with the arms on the framework and extending from an exit station adjacent one side of the framework towards an entry station opposite thereto, the arms being racked in a common sense so as to incline upwardly at the entry station and downwardly at the exit station, the arrangement being such that the elongate members are individually deposited on the trailing faces of selected sets of the arms at the entry station and, as the framework rotates, carried on these faces downwardly towards the rack and then driven upwardly along the rack by the leading faces of the succeeding set of arms whereby to be discharged therefrom under gravity at the exit station.

The elongate members may be steel bars, billets or slabs etc. and, as mentioned, this invention is applicable to quenching these sections in which case the "housing" may constitute a tank for the quenching medium, e.g. water, the axis of rotation of the cylindrical framework lying above the water level.

The entry and exit stations may be at different levels as desired or they may be diametrically opposite each other on a level plane roughly in line with the axis of rotation, and the outstanding arms may each embody an inturned lip on the extremity of their trailing face to retain the sections over substantially the whole of the first quarter turn of travel — in this event the rack need only extend back from the exit station over little more than the second quarter turn of travel to provide a slight 'overlap.'

The tank may be made to any convenient shape since it fulfills no part in supporting the steel sections; it may thus be designed with adequate capacity to accommodate the sludge without interfering with the rotatable framework although, of course, contrary to the known arrangements discussed above, there are no separately movable parts to contend with on this mechanism. The tank may, for example, conveniently incorporate a sloping pit for collecting the sludge.

Conventional dog drive means may be provided for loading the sections at the entry station and similarly, conventional stacking means may be provided at the exit station.

In order that the invention may be fully understood one embodiment thereof will now be described, by way of example, with reference to the accompanying drawing; in which:

FIG. 1 is a sectional side elevation of the mechanism; and

FIG. 2 is a section along II—II in FIG. 1.

Referring now to the drawings, a cylindrical framework **3** is mounted for rotation in the direction shown abut bearing journals **4** secured to a rectangular-section quenching tank **5**. An entry station **6** embodying a roller table **7** and a pusher arm/ducking dog **8** is mounted on one side of the framework and an exit station including a stacker mechanism **9**, which is indicated purely schematically, is mounted on the opposite side.

The cylindrical framework comprises a hollow shaft **11** to which is secured at axially spaced intervals a number of fabricated disc-like structures **12** from which a plurality of arms **13** extend. These arms are all raked in a common sense at an angle inclined to the normal and carry at their extremities buttresses or lips **14**.

A rack **16** comprising a number of arcuate quadrant rails **17** extending into the tank and secured to the bottom by brackets **18** depends from an exit table **19** which, in turn, is secured to the top of the tank. These rails are "interleaved" with the arms **13** of the framework so as to allow the latter freedom to rotate.

The quenching tank is filled with water **21** to a level below that of the axis of the framework.

In operation, this framework or wheel rotates slowly in steps in the direction shown and, as illustrated, hot steel slabs **22** are transported in a direction perpendicular to the plane of the drawing along the roller table **7**.

The leading slab is arrested alongside the wheel and, in the dwell period during its rotation the pusher arm (**8**) is actuated, the dog driving the slab on to the trailing faces of the appropritate set of arms **13** over the end of the buttresses and, on its return, pivotally ducking under any obstruction in its path such as the succeeding slab length.

As the wheel continues to rotate in steps, the loading cycle is repeated during each interval, and the slabs are immersed in the quenching water. The angle of inclination of the arms is such that the slabs enter the water in a substantially horizontal mode and they are arranged to be completely submerged in the rotational movement between two successive steps or dwell periods.

Continued rotation of the wheel causes the slabs to slide down against the buttresses and subsequently, that is, after traversing about a quarter turn from the entry station, the arms enter the area embraced by the rails

17. Thus, as the slabs ultimately tilt off the trailing faces of these arms and eventually fall away from them against the leading faces of the succeeding set of arms, they are prevented from falling into the tank by these rails along which they are driven upwardly as the wheel continues to rotate.

The slabs are then lifted free from the water and finally, at the rail terminations, the inclination of the arms is such that the slab is deposited under gravity to the stacker mechanism **9** along the exit table **19.** From here the slabs may be transported by chain conveyor or other conventional means to another location for subsequent operations such as straightening, inspection, deseaming or simply conveyance to stock.

Although this invention has been described with reference to the detailed arrangement illustrated it is to be understood that various modifications may readily be made, particulary in respect of the wheel, without departing from the scope of this invention. For example, although the wheel has been shown as constituting a number of disc-like structures spaced along a hollow shaft these may be replaced by a single large diameter hollow drum or cylinder from which the arms extend directly. In addition, although the bearing journals for the wheel have been shown secured to the quenching tank it may be more convenient to have these independently mounted outside the tank.

Further, it will be appreciated that although the entry and exit stations have been illustrated as lying diametrically opposite one another on a common level plane, the invention could equally well be applied in cases where loading and discharge are required at different levels, it merely being necessary for the inclination of the arms to be sufficiently acute for automatic discharge under gravity.

It will be evident also that the transported sections are inverted by the loading and discharge so that this arrangement may be employed simply as a transport mechanism for this reason, i.e., for purposes other than quenching, such as billet inspection, in which case a tank will not be utilised.

I claim:

1. A mechanism for laterally transporting elongate members comprising:

a housing,

a cylindrical framework rotatable in said housing,

an entry station on one side of the framework, an exit station on the opposite side of the framework,

a plurality of sets of arms regularly spaced around and outstanding from the periphery of the framework,

fixed arcuate rack means projecting beneath the framework and interleaved with the arms on said framework, said rack means extending from the exit station toward the entry station,

means for individually depositing said elongate members on the trailing faces of selected sets of the arms at the entry station,

said rack means being positioned to support each elongate member while it falls from the trailing face of one set of arms to the leading face of the next set of arms as the framework rotates and carries said arms and the elongate members thereon first downwardly toward said rack means and then upwardly toward said exit station, and

said arm being raked in a common sense such that they incline upwardly when passing the entry station and incline downwardly when passing said exit station to discharge said elongate members by gravity.

2. A mechanism according to claim **1,** wherein the housing is a tank for a liquid medium, the axis of rotation of the cylindrical framework lying above the level of this medium.

3. A mechanism according to claim **2,** wherein the entry and exit stations are substantially diametrically opposite one another on a level plane substantially in line with the said axis of rotation of the cylinder framework.

4. A mechanism according to claim **3,** wherein ach of the outstanding arms comprises

an inturned lip on the extremity of its trailing face whereby to retain the members over substantially the whole of the first quadrant of travel from the entry station.

5. A mechanism according to claim **4,** wherein the arcuate rack extends from the exit station over a region slightly greater than the second quadrant of travel from the entry station.

6. A mechanism according to claim **5,** wherein the cylindrical framework comprises

a hollow shaft, and

a series of axially-spaced disc-like structures secured to the shaft and from which the said arms extend.

7. A mechanism according to claim **6,** wherein the framework is rotatable in a stepwise fashion.

8. A mechanism for laterally transporting and quenching hot steel sections issuing from a finishing mill, comprising:

a tank for a liquid coolant,

a cylindrical framework rotatable in the tank about an axis lying above the level of the coolant,

an entry station on one side of the framework,

an exit station on the opposite side of the framework,

a plurality of sets of arms regularly spaced around, and outstanding from the periphery of the framework, and

fixed arcuate rack means projecting into said tank beneath the framework and interleaved with the arms on said framework, said rack means extending from the exit station toward the entry station,

means for individually depositing said elongate members on the trailing faces of selected sets of the arms at the entry station,

said rack means being positioned to support each elongate member while it falls from the trailing face of one set of arms to the leading face of the next set of arms as the framework rotates and carries said arms and the elongate members thereon first downwardly into said tank toward said rack means and then upwardly toward said exit station, and

said arms being raked in a common sense such that they incline upwardly when passing the entry station and incline downwardly when passing said exit station to discharge said elongate members by gravity.

9. A mechanism according to claim **8,** comprising an inturned lip on the extremity of the trailing face of each of the said arms whereby to retain the sections throughout the course of their travel to the tank.

10. A mechanism according to claim **9,** wherein the entry and exit stations are located at levels different both from one another and from a horizontal plane

containing the axis of rotation of the cylindrical framework.

11. A mechanism according to claim **10**, wherein the cylindrical framework is rotatable in a stepwise fashion and comprises

a hollow shaft, and

a plurality of disc-like structures axially spaced along the shaft and from which the said arms extend.

12. A mechanism according to claim **11**, comprising a sloping pit in the tank for collecting sludge.

* * * * *