Feb. 2, 1965 J. T. LAMB 3,168,637

MICROWAVE OVEN CONTROL

Filed June 14, 1962 2 Sheets-Sheet 1

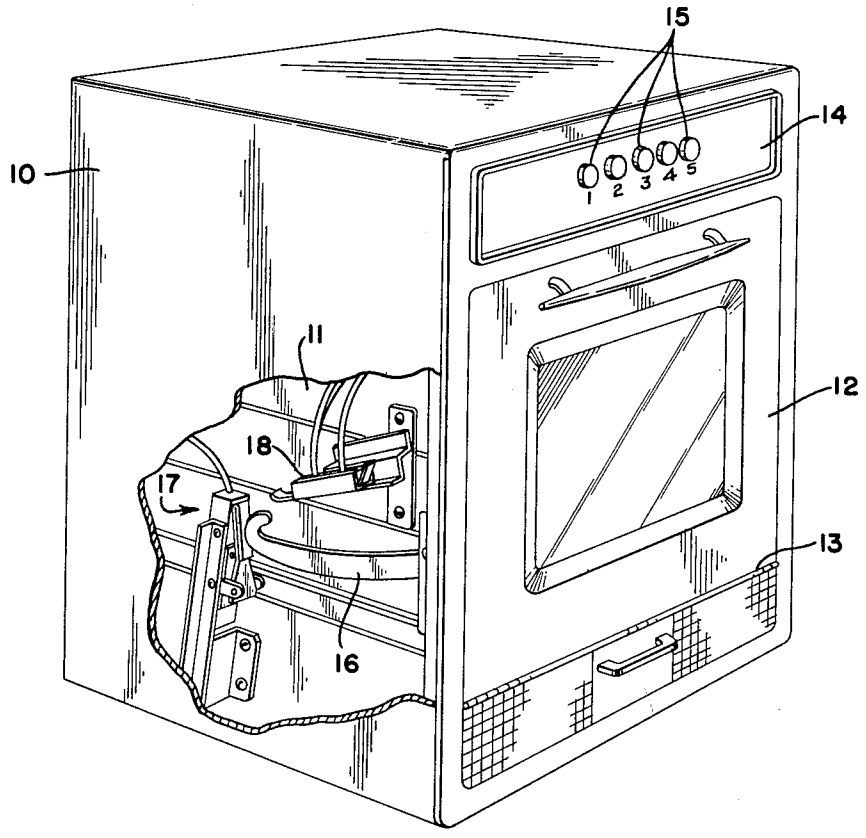

FIG. 1

INVENTOR.
JOHN T. LAMB

BY
Oberlin, Maky & Donnelly
ATTORNEYS

Feb. 2, 1965 J. T. LAMB 3,168,637

MICROWAVE OVEN CONTROL

Filed June 14, 1962 2 Sheets-Sheet 2

FIG. 2

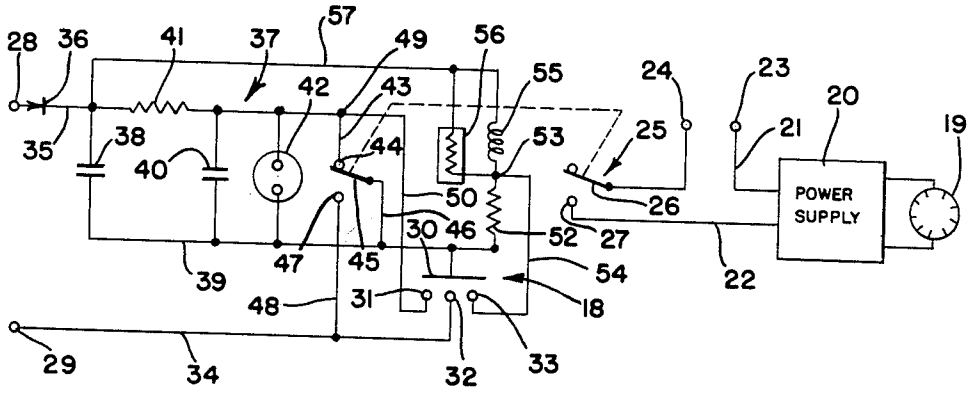

FIG. 3

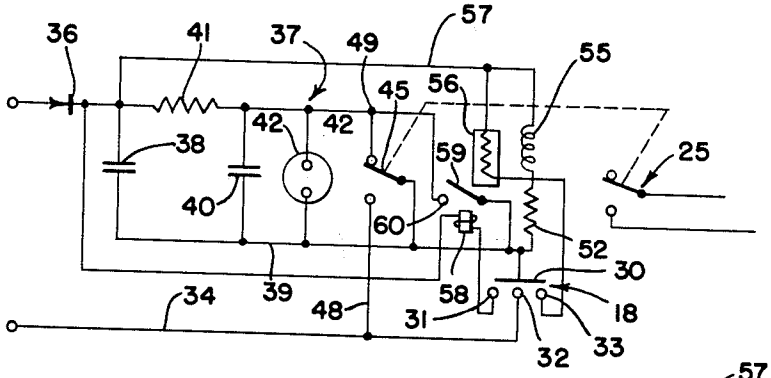

FIG. 4

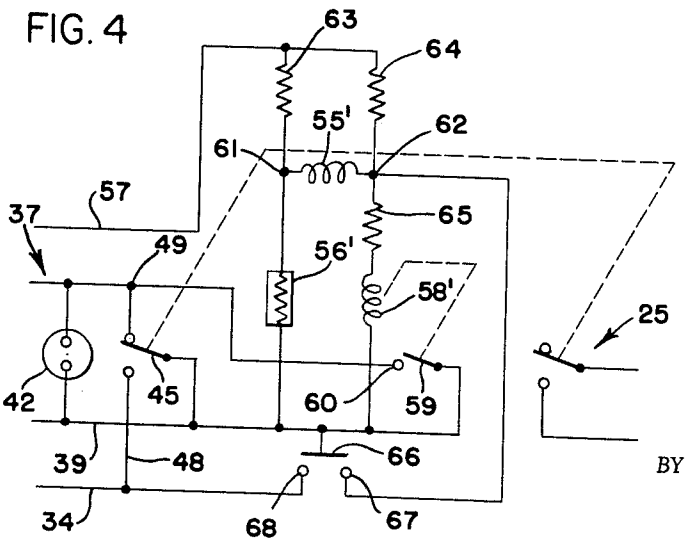

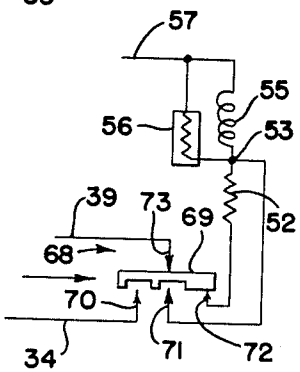

FIG. 5

INVENTOR.
JOHN T. LAMB

BY Oberlin, Maky & Donnelly

ATTORNEYS

United States Patent Office

3,168,637

Patented Feb. 2, 1965

3,168,637

MICROWAVE OVEN CONTROL

John T. Lamb, Mansfield, Ohio, assignor to The Tappan Company, Mansfield, Ohio, a corporation of Ohio

Filed June 14, 1962, Ser. No. 202,540
8 Claims. (Cl. 219—10.55)

This invention relates as indicated to microwave oven control and, more particularly, to an automatic control for a microwave oven having both light and heavy periods of use, with the oven in the latter periods being used to provide relatively short heating or cooking operations in rapid succession.

Since a microwave oven is not instantly operative upon energization, there being an appreciable delay occasioned by heating of the cathode or filament of the magnetron which supplies the energy to its operating temperature, it has been the practice in many commercial installations to maintain the filament continuously energized without regard to actual demand. While it is, of course, appreciated that the useful life of the magnetron will very likely be considerably shortened by such practice, it has obviously been determined in these installations that it is more important to avoid the normal warm-up delay at the start of each cooking operation. In most conventional apparatus, this delay is on the order of one minute and therefore substantial in relation to the time for many of the cooking operations performed in the oven. Moreover, a decrease in the warm-up time of the magnetron tube by improved design does not provide a full solution, since the tube wear due to filament cycling in short periods of operation can exceed that produced by the continuous energization practice.

A good example of the problem, and one with which I am especially concerned, is the use of a microwave oven for vending or reheating service. In this type of an installation, the oven is used in conjunction with a supply of food products, many of which may be precooked and refrigerated, and the cooking or heating operations are quite short, with peak periods of use naturally occurring as well as periods during which the oven may be operated only at long-spaced intervals. The usual warm-up time is clearly a disadvantage in the first such circumstance, and continuous filament energization in an unattended machine simply is not practical. An operator could of course be employed manually to determine the continuous energized condition in relation to the observed demand, but this would provide at best more limited service at considerable added cost. While program control might be used to replace the attendant with obvious economic advantage, such an expedient would involve estimating the occurrences of the peak periods, which cannot be reliably predicted.

It is accordingly a primary object of my invention to provide an improved control for a microwave oven which will automatically hold the same in an energized stand-by condition during periods of heavy use, without the limitations and disadvantages noted in the foregoing.

Another object is to provide such a microwave oven control responsive to the actual demands or frequency of use of the oven so that the oven has both normally off and stand-by conditions in accordance with rate of use during any given period.

The new control can aptly be considered to provide a holding circuit for the oven which will, after a first use of the oven, keep the filament warmed up in the sense discussed for a predetermined subsequent timed period. If a second cooking operation is commenced before the expiration of the hold time, the warm-up delay is therefore avoided; the holding period is, moreover, re-established so that the oven will be maintained in the

stand-by condition for as long as new cooking operations are started with less than the hold time interval between each and the one next succeeding.

Other objects and advantages of the present invention will become apparent as the following description proceeds.

To the accomplishment of the foregoing and related ends, the invention, then, comprises the features hereinafter fully described and particularly pointed out in the claims, the following description and the annexed drawings setting forth in detail certain illustrative embodiments of the invention, these being indicative, however, of but a few of the various ways in which the principle of the invention may be employed.

In said annexed drawings:

FIG. 1 is a perspective view of a microwave oven in accordance with the invention and with a portion broken away to illustrate certain inner construction;

FIG. 2 is a wiring diagram of the control circuit which provides the desired mode of operation of the oven;

FIG. 3 is a further wiring diagram of a slightly modified form of such circuit;

FIG. 4 shows a further modification of a portion of the FIG. 3 circuit; and

FIG. 5 shows another modified form of the FIG. 2 circuit.

Referring now to the drawings in detail, the illustrated microwave oven comprises an outer casing **10** within which there is an oven liner or metallic enclosure **11** providing the cooking cavity of the unit. This cavity is open at the front and provided with a door **12** secured at its bottom edge by a hinge **13** for downward swinging movement to a substantially horizontal open position.

A control panel **14** is provided at the top of the oven and a series of push buttons **15** project through openings provided in the panel. It is contemplated that this particular oven will include a push-button timer including the exposed buttons **15**, with the latter selectively actuated to establish cooking periods of fixed different times. As shown, the buttons can be numbered for convenience and these numbers used in coding food packages or articles for the proper time selection.

The oven door **12** has two inwardly projecting arms which move therewith and extend into the spaces respectively between the opposed side walls of the outer casing and oven liner, with the arm **16** at the left side shown in the drawing. These arms are primarily provided for guiding and control of the door movement, preferably in association with counterbalance mechanism which has not been illustrated, but the arm **16** at the left is also used to actuate switch devices in response to the opening and closing of the door.

One such switch device is generally designated by reference numeral **17** and functions to prevent the supply of the high-frequency energy to the oven when the door is in any position other than its fully closed position. This safety feature, however, is not a part of the present invention and will not be described in further detail.

A second switch **18** is mounted on the side wall of the oven liner **11** adjacent the path of movement of the door arm **16**. The disposition of this switch is such that as the door is moved from the closed to the open position, the arm **16** engages and slides over the switch, with this temporary engagement also occurring in the reverse movement of the door. A movable contact of the switch is actuated by such engagement, as will be further discussed hereinafter.

Referring now to the wiring diagram of FIG. 2, the magnetron **19** of the oven is connected through a suitable power supply and control assembly **20** by the wires **21** and **22** to the terminals **23** and **24** representing an ap-

propriate source of electric energy. A switch 25 comprising an arm 26 and a cooperable fixed contact 27 is inserted in the line 22 and is normally open as illustrated. When this switch is closed, the power supply is energized to the extent that current is caused to flow through the filament of the magnetron for heating of the same. That is, the power supply will control the actual generation of the high-frequency energy in response to other signals, such as the timer mentioned above and the door safety switch, but this invention is concerned only with energization of the tube filament under the control of the switch 25 in the manner noted.

A separate control circuit for actuation of switch 25 is provided having terminals 28 and 29 for connection to a conventional 115 volt alternating current supply. The door switch 18 described earlier more particularly comprises a movable contact blade 30 actuated in response to the movement of the door and three stationary contacts 31, 32 and 33 commonly opposed to the movable contact 30 for simultaneous engagement by the latter.

The terminal 29 of the control circuit is connected by a wire 34 to the center fixed contact 32 of the door switch 18. A wire 35 extends from the other terminal 28 to a rectifying device 36 and from the latter to a network designated generally by reference numeral 37 and comprising a first capacitor 38 connected between the wire 35 and a further wire 39 which extends to the movable contact 30 of the switch 18. A second capacitor 40 is connected in parallel with the first capacitor 38, with a resistance 41 interposed between the corresponding sides of the two capacitors. A neon bulb 42 is similarly connected in parallel, and there is a further branch in the network formed of wire 43, fixed contact 44, movable switch arm 45 and wire 46. The switch arm 45 is normally engaged with contact 44 as shown and is adapted to be moved from this position into engagement with another cooperative fixed contact 47 from which a wire 48 extends to the supply wire 34.

The network 37, at the point 49, is connected by a wire 50 to the fixed contact 31 of the door switch 18, and the movable contact 30 of the latter is also connected to one end of a further resistance element 52. The other end of this resistance element at the point 53 is connected by a wire 54 to the last fixed contact 33 of the switch 18, and a relay coil 55 and a photoelectric cell 56 are connected in parallel between the point 53 and the circuit side of the rectifying device 36 by a conductor 57. The photoelectric cell is disposed to receive light from the neon bulb 42.

The illustrated condition of the FIG. 2 control circuit represents the normally off condition of the microwave oven in which the significance for my purpose is the deenergization of the magnetron filament or cathode. When the oven door is opened to insert food to be cooked or reheated, the door switch 18 is momentarily closed, with all three fixed contacts 31, 32 and 33 engaged by the movable contact 30. It will be clear that the engagement of the switch contacts 30 and 32 completes the energization of the control circuit, and that the engagement of the contact 33 by the movable contact 30 short circuits resistance 52 to cause the relay coil 55 to be energized. As indicated by the dashed lines, the relay coil actuates the switch arms 26 and 45, with the former moved into engagement with the cooperative contact 27 and the latter moved from contact 44 to the contact 47.

The closure of the switch contacts 26 and 27 in the magnetron circuit provides the previously described flow of heating current to the filament, while the engagement of the contact arm 45 with the associated fixed contact 47 completes a holding circuit for the relay coil 55 through the resistance element 52, with the closed relay maintaining the energization of the control circuit when the oven door is closed. The capacitor 40 is slowly charged through the resistance 41, and the time constants preferably are such that the charge on the capacitor will be sufficient to fire the neon bulb 42 at the end of an uninterrupted five minute period. Should this condition occur, the bulb 42 fires and its illumination is effective to actuate the photoelectric cell 56, with the resistance of the latter thereby being decreased and the relay coil 55 effectively shorted to cause the relay to open. Such opening of the relay interrupts the flow of current through the magnetron filament and de-energizes the separate control circuit.

In the foregoing operation, reference is made only to an initial opening and closing of the oven door for the purpose of inserting food in the oven, and the control circuit would function to shut off the oven if the door is not again opened within the hold time period. As a practical matter, it is preferred that the hold time, such as the illustrative five minute period, be somewhat greater than the maximum cooking time used and selected by operation of the push-button timer, so that the latter will normally determine the end of the particular selected cooking period by shutting off the energy supply to the oven in the usual manner. Such termination by the timer will, again as usual, be signalled audibly and/or visibly, whereupon the customer or operator would open and close the door for removal of the cooked food. With the relative timing set forth, the capacitor 40 will not at this second door opening be sufficiently charged to fire the neon bulb, but the control circuit will nevertheless be at an intermediate point in its hold time period.

The circuit, however, includes an automatic resetting feature whereby the timing capacitor is discharged on the second door opening to start the hold time period anew. This accomplished by the engagement of the door switch contacts 30 and 31, which, with the wire 50, short circuits the capacitor 40 directly. Accordingly, this capacitor loses its intermediate charge and, the circuit remaining otherwise in the same energized condition, the capacitor charging is restarted. Such resetting of the timing circuit will of course occur similarly upon any door opening while the capacitor 40 is being slowly charged.

The circuit of FIG. 3 is essentially the same as that of FIG. 2 with the difference in the use of the former of a further small relay 58 connected between the door switch contact 31 and the circuit side of the rectifier 36. The network 37 at the point 49 is connected through contacts 59, 60 actuated by the relay 58 to the movable contact 30 of the door switch 18. According to this modifictaion, the resetting of the circuit is thus accomplished through the relay 58 and contacts 59, 60 for the shorting of the capacitor 40 instead of directly as shown in FIG. 2.

A further variation of this FIG. 3 circuit is illustrated in FIG. 4, wherein the relay coil 55′ is connected across the output terminals 61 and 62 of a bridge circuit between wires 57 and 39 and comprising, as the respective legs thereof, resistor 63 between 57 and 61, photoelectric cell 56′ between 61 and 39, resistor 64 between 57 and 62, and resistor 65 and relay coil 58′ between 62 and 39. A somewhat simpler door switch is employed having a movable contact 66 actuated in response to door movement, a first fixed contact 67 connected to the bridge point 62, and a second fixed contact 68 connected to the supply wire 34. Coil 58′ actuates contact 59 for shorting of capacitor 40 as described in reference to FIG. 3, while coil 55′ actuates switches 45 and 25 also as before. Here, however, it will be appreciated that the bridge circuit employed, and operating in the usual general manner of such a circuit, will insure rapid and positive cut-off of the current to the control relay when conditions dictate that this should occur as earlier described, and this feature would normally be preferred for such reason.

The modification illustrated in FIG. 5 is also concerned with resetting of the holding or timing circuit, with a special form of door switch 68 here employed for the pur-

pose. This switch includes a conductive slide **69** which is reciprocated in response to movement of the oven door, the arrow indicating the direction of the slide when the switch is actuated by opening of the door, and three cooperable contact fingers **70**, **71** and **72**. The supply wire **34** is connected to contact **70**, while the network **39** is connected to a further contact **73** continuously engaged with the slide. Contact **71** is connected with the point **53**, while remaining contact **72** is connected to the other end of the resistance **52**. This circuit is otherwise the same as the FIG. 2 circuit.

As the slide **69** moves to the right with opening of the oven door, it is brought into engagement with fingers **70** and **71** at the same time it is engaged by the fingers **72** and **73**. The relay coil **55** is thus energized with the results earlier described. The slide continues to move in the same direction to a limit position in which the engagement with fingers **70**, **71** and **72** is broken and the relay opens to short the timing capacitor. When the door is closed, the slide moves back through the position wherein all three contacts **70**, **71** and **72** are again engaged simultaneously by the slide, thereby reclosing the relay, to the illustrated rest position in which the relay is held closed by the circuit through the resistance **52** in the manner previously explained. In this modification, the main relay is therefore employed for the resetting of the hold time.

It will thus be seen that the microwave oven according to the invention requires the warm-up delay during periods of heavy use only upon the initial cooking operation within such period. Assuming, for example, that several customers are waiting to use the oven, and that they follow one another within a few minutes, only the first customer will experience the noted delay. It will be understood that the five minute period mentioned earlier is illustrative and has been selected for an installation in which cooking periods of shorter duration are provided by the usual timer control.

When the demand is less, and the oven operated only at substantial intervals, there is not the same need to avoid the delay and the oven is accordingly off for most of the time. The invention thus combines both the continuous energization and normally off filament conditions for highly efficient use of the apparatus in relation to the actual demand.

Other modes of applying the principle of the invention may be employed, change being made as regards the details described, provided the features stated in any of the following claims or the equivalent of such be employed.

I, therefore, particularly point out and distinctly claim as my invention:

1. In an electronic heater including an enclosure within which articles to be heated are located, power tube means for generating the energy needed for such heating of the articles within the enclosure and including filament means having a predetermined elevated operating temperature, control means for regulating the application of the energy output of said power tube means to the enclosure for the heating of the articles therein, said control means being thus operative to establish an article-heating period, and circuit means for heating of said filament means to the operating temperature thereof, said circuit means comprising switching means for connection of the circuit means to a conventional available source of energy, actuator means for closing said switching means to effect such connection and consequent energization of the circuit means for heating of the filament means to said predetermined operating temperature, such heating of the filament means conditioning the power tube means for operation by said control means to effect the heating of the articles in the enclosure, and holding means for holding said switching means closed to maintain the heating of the filament means for a fixed period of time

greater than the article-heating period established by the operation of said control means in regulating the energy output of the power tube to the enclosure.

2. The combination set forth in claim 1 wherein the enclosure is provided with a door, and the actuator means for closing said switching means is operated by movement of said door for closure of said switching means to initiate heating of the power tube filament means.

3. The combination set forth in claim 1 including reset means for resetting said holding means to recommence the fixed operating period of time thereof in response to initiation of a subsequent article-heating period by said control means prior to expiration of a previously initiated operating period of said holding means.

4. The combination set forth in claim 3 wherein the enclosure is provided with a door, and movement of said door operates the reset means for such resetting of the holding means.

5. In an electronic heater including an enclosure for heating articles therein, said enclosure being provided with a door, power tube means for producing the energy applied to the enclosure for such heating, adjustable timer means for controlling the energy output of the power tube means and determining the article-heating periods of the heater, with said power tube means having filament means requiring heating to a predetermined temperature operation to condition the power tube means for production of such energy; circuit means for heating said filament means by connection of the same to a conventional available source of energy, switch means in said circuit means actuated by movement of the door of the enclosure, timing means separate from said adjustable timer means which controls the application of the output energy of the power tube means to the heating of the articles in the enclosure, switch means also actuated by movement of the enclosure door for initiating operation of said separate timing means, and actuator means operated by said separate timing means for interrupting energization of said circuit means and hence heating of the filament means at the expiration of a fixed period of time following initiation of operation of said separate timing means, the thus fixed period of energization of the circuit means for heating of the filament means being greater than the maximum adjusted time provided by said adjustable timer means for heating of articles within the enclosure.

6. The combination set forth in claim 5 including reset means for resetting said separate timing means to restart the fixed time period of operation of the same in response to a subsequent actuation of the enclosure door before expiration of a preceding period of operation of the timing means.

7. The combination set forth in claim 6 wherein said separate timing means includes a resistance-capacitance timing circuit, and said reset means is operative to short-circuit said capacitance in response to movement of the enclosure door.

8. The combination set forth in claim 7 wherein said separate timing means further includes a glow tube which fires in response to predetermined charging of said capacitance, and photoelectric means for operating the actuator means to interrupt energization of said circuit means in response to firing of said glow tube.

References Cited in the file of this patent

UNITED STATES PATENTS

2,632,090	Revercomb et al.	Mar. 17, 1953
2,733,650	Williams	Feb. 7, 1956
2,839,649	Macoicz	June 17, 1958

FOREIGN PATENTS

877,553	Great Britain	Sept. 13, 1961