No. 732,517. PATENTED JUNE 30, 1903.

J. CHRISTIE.

SPACING TABLE FOR PUNCHING MACHINES.

NO MODEL. APPLICATION FILED JAN. 28, 1903. 3 SHEETS—SHEET 1.

Fig. 1.

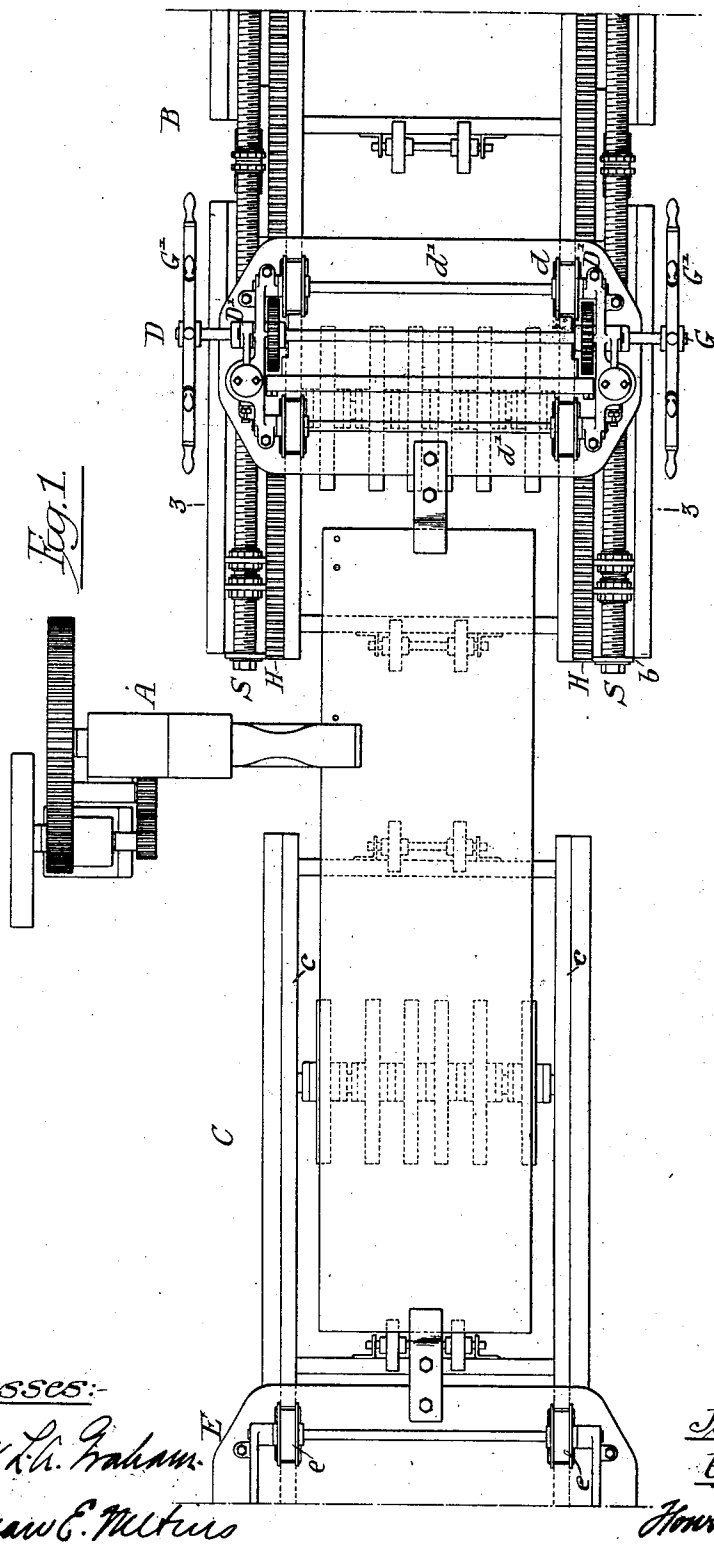

Witnesses:-
Frank L. A. Graham.
Herman E. Mellus

Inventor:-
James Christie,
by his Attorneys,
Howson & Howson

THE NORRIS PETERS CO., PHOTO-LITHO., WASHINGTON, D. C.

No. 732,517. PATENTED JUNE 30, 1903.

J. CHRISTIE.

SPACING TABLE FOR PUNCHING MACHINES.

NO MODEL. APPLICATION FILED JAN. 28, 1903. 3 SHEETS—SHEET 2.

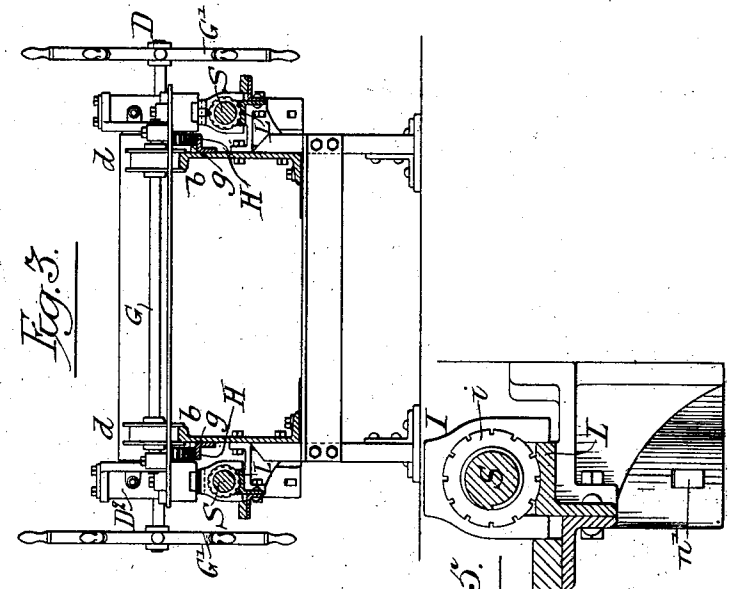

Fig. 3.

Fig. 5.

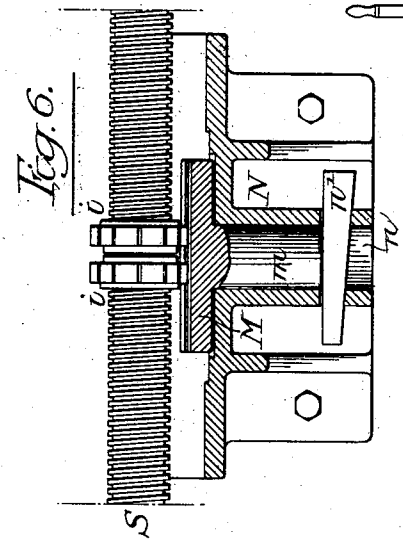

Fig. 6.

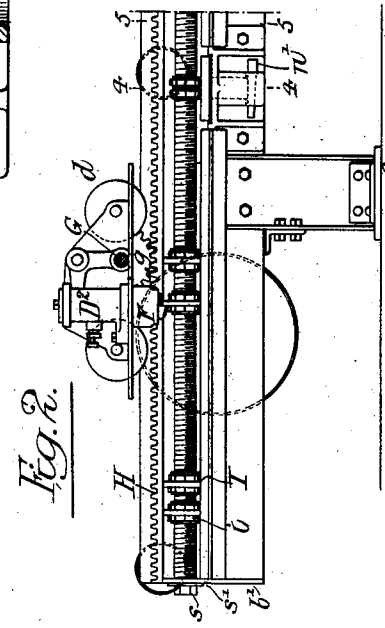

Fig. 2.

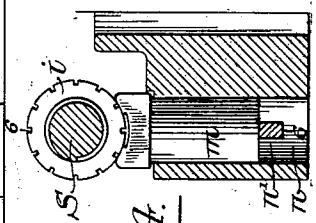

Fig. 4.

Witnesses:-
Frank L. A. Graham:
Herman E. Mitchell

Inventor:
James Christie,
by his Attorneys;
Howson & Howson

THE NORRIS PETERS CO., PHOTO-LITHO., WASHINGTON, D. C.

No. 732,517. PATENTED JUNE 30, 1903.

J. CHRISTIE.

SPACING TABLE FOR PUNCHING MACHINES.

NO MODEL. APPLICATION FILED JAN. 28, 1903.

3 SHEETS—SHEET 3.

Fig. 7.

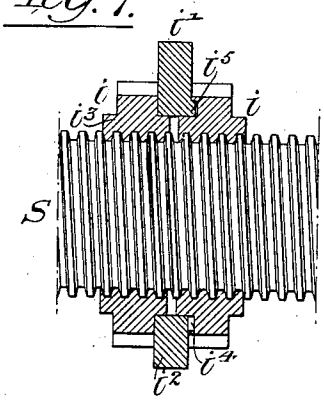

Fig. 8.

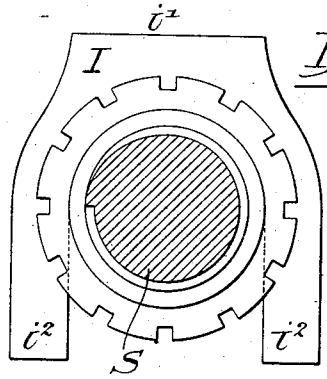

Fig. 9.

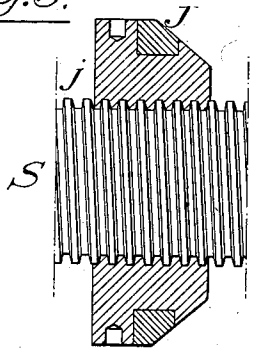

Fig. 10.

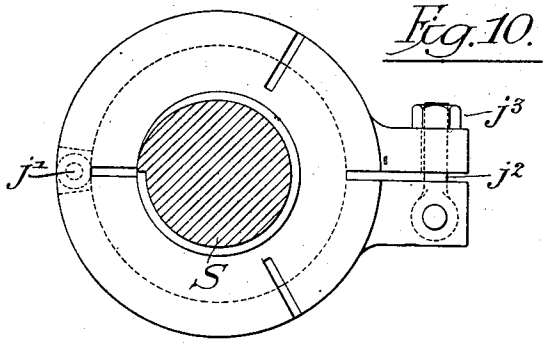

Fig. 11.

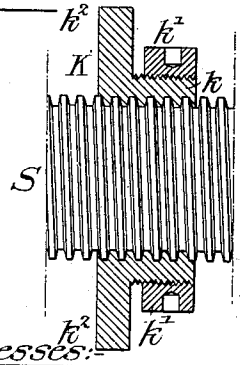

Fig. 12.

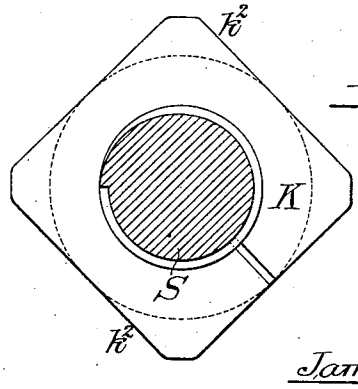

Witnesses:

Frank L. A. Graham.

Herman E. Metcis.

Inventor:

James Christie,

by his Attorneys

Howson & Howson

THE NORRIS PETERS CO., PHOTO-LITHO., WASHINGTON, D. C.

No. 732,517. Patented June 30, 1903.

UNITED STATES PATENT OFFICE.

JAMES CHRISTIE, OF PHILADELPHIA, PENNSYLVANIA.

SPACING-TABLE FOR PUNCHING-MACHINES.

SPECIFICATION forming part of Letters Patent No. 732,517, dated June 30, 1903.

Application filed January 28, 1903. Serial No. 140,947. (No model.)

To all whom it may concern:

Be it known that I, JAMES CHRISTIE, a citizen of the United States, residing in Philadelphia, Pennsylvania, have invented certain Improvements in Spacing-Tables for Punching-Machines, of which the following is a specification.

My invention relates to certain improvements in spacing-tables for punching-machines, as illustrated in the patent granted to me on November 18, 1902, No. 713,962.

The object of my invention is to provide means by which the stops for the carriage can be quickly and accurately adjusted.

In the accompanying drawings, Figure 1 is a plan view of sufficient of a spacing-table and of a punching-machine to illustrate my invention. Fig. 2 is a side view of one end of the spacing-table. Fig. 3 is a transverse section on the line of 3 3, Fig. 1. Fig. 4 is an enlarged sectional view on the line 4 4, Fig. 2. Fig. 5 is a sectional view on the line 5 5, Fig. 2. Fig. 6 is a sectional view on the line 6 6, Fig. 4. Figs. 7 and 8 are enlarged detail views of the stop, and Figs. 9, 10, 11, and 12 are views of modifications of my invention.

A is a punching-machine of any of the ordinary forms. The punching-machine is mounted between two tables B and C. Arranged to travel on the table B is a carriage D, and arranged to travel on the table C is a carriage E.

The table B has two rails *b* at each side, on which the wheels *d* of the carriage D travel, and on the table C are rails *c*, on which the wheels *e* of the carriage E travel. On each table is a series of supporting rollers or disks for the plate to be punched. Suitable clamps are secured to each carriage for clamping the plate to be punched to the carriages. The carriage D is the one which is operated, while the carriage E is used for the purpose of keeping tension on the plate. The wheels *d* of the carriage D are mounted on axles *d'*, having their bearings in the side frames D' of the carriage, and these wheels are preferably double-flanged, so as to accurately guide the plate.

G is the driving-shaft, mounted on the carriage D and having hand-wheels G', one at each side of the carriage. Fixed to this shaft at each side is a pinion *g*. Each pinion meshes with a rack H, secured to the table. On turning one of the hand-wheels the carriage can be moved longitudinally on the table B.

In order to lock the carriage after adjustment, so that the punching-machine will accurately punch the plate, I provide a bolt I or an equivalent projection, preferably at each side of the carriage, and the bolts are mounted in the present instance in the casings D^2, forming part of the side frames. The bolts are similar to the bolts illustrated in detail in the above-mentioned patent, and the details of construction of the carriage are similar to that set forth in the above-mentioned patent, and therefore need not be described in detail in this specification.

In place of the rails and adjustable dogs or stops illustrated in the above-mentioned patent I provide two longitudinal screw-threaded rods S S. These rods are held in place by the nuts and washers *s s'* at each end, which bear against the plates *b'*, forming part of the table B.

In order to prevent the screw-rods sagging between the ends and yet to allow for the adjustment of the stops from one end of the rod to the other, I provide supporting-platforms M at intervals. These supporting-platforms are clearly illustrated in Figs. 4 and 6. Each platform has a stem *m* arranged within the socket *n* in the bracket N, secured to the table, and extending through the socket is a wedge *n'*, on which the stem of the platform rests, so that when the wedge is driven in or out the platform is either raised or lowered.

On the screw-threaded rod are nuts *i*, which have in the present instance circular peripheries notched to receive a suitable spanner for turning the nuts on the rods.

The platforms are concaved in cross-section, as shown in Fig. 4, to receive one or more of these nuts, so that when one of the platforms is raised, as indicated in Fig. 6, the screw-rod S is supported by the platform through the nuts, and the sagging of the rod is thus prevented. When, however, it is desirable to adjust the nuts on the rod, then the platform is lowered, allowing the nuts above the platform to be freely turned. Between other nuts *i*, Figs. 5, 7, and 8, are stop-

plates I, these stop-plates having a flat surface i' at the upper end and legs i^2, which extend down on each side of the nuts, the nuts being cut away to form shoulders i^3, on which the stop-plates rest, and one of the nuts has a recess i^4 for the reception of a lug i^5 on the stop-plate, so that when the two nuts are adjusted in position with the stop-plate between them it is locked to the nuts and through the nuts to the screw-rod S.

As shown in Figs. 2, 3, and 5, I preferably arrange a support-bar L directly under the screw-rod S, and this support-bar is slightly recessed, and in this recessed portion the nuts i rest. This support-bar is carried by brackets projecting from the frame of the table. When the screw-rod S is raised by the wedge n', the nuts i above the bar L are relieved from contact with the bar L, so that they can be readily adjusted. By this arrangement I am enabled to make a very fine adjustment of the stops I and can arrange them in groups, as desired, or space them an equal distance apart and make the adjustment accurate, and when the stops are in position they can be firmly locked, so that they will not be disturbed by the rough usage to which a machine of this type is usually subjected.

Instead of the two nuts shown in Figs. 7 and 8 I may use a single nut, as shown in Figs. 9 and 10. The nut j in this instance may be recessed for the reception of the stop J, and the nut is made in halves, the halves being pivoted together at j' and clamped together by a bolt j^2 and nut j^3.

In Fig. 11 I have shown a single split nut K mounted on the screw S, and this split nut has a screw-threaded portion k, on which is mounted a nut k', on the screwing up of which the nut K is confined to the screw-rod S. The portion k may be slightly tapered, so as to draw the split nut firmly upon the screw-rod. In this construction the nut K has a flange portion k^2, which is square, as shown in Fig. 12, forming four projections, any one of which can be turned up in line with the bolt F of the carriage.

When it is desired to punch a plate with any number of holes, a diagram is provided showing the distance apart of the several holes, and the operator of the machine adjusts the nuts carrying the stop-plates on the screw-rods so that they are the distance apart required by the diagram. The punch is then set in motion, and the carriage is adjusted so that the bolts will come in contact with the first stops. The punch is then operated to punch the hole in the plate. Then the carriage is adjusted to the second stop, and so on until the desired number of holes are punched in the side of the plate. If another plate is to be placed in position or another side to be punched with the holes spaced differently, then the stops are adjusted to another diagram and the operation repeated.

It will be understood that while I prefer to use a spacing-table having a screw-rod at each side thereof, so as to make the spacing absolutely accurate, I may in some instances and in some types of table use a single screw-rod either at one side or at the center of the machine without departing from my invention, and while I have illustrated a particular form of carriage, such as described and claimed in my Patent No. 713,962, in which a vertically-operated bolt is used to engage the stops on the screw-rods, other forms of carriages may be used without departing from my invention, and instead of having a vertically-operated bolt it may be operated in any manner so as to allow the carriage to travel on the table and yet stop the carriage rigidly at any point decided upon according to the adjustment of the stop-plates.

I claim as my invention—

1. The combination in a spacing-table for punching-machines, of a table, a carriage mounted thereon, a screw-threaded rod longitudinally mounted on the table, nuts on the rod and a stop held by said nuts for limiting the motion of the carriage, substantially as described.

2. The combination of a table, a carriage mounted on the table, a projection on the carriage, a screw-threaded rod mounted longitudinally on the table, a pair of nuts on the rod, and a stop-plate mounted between the nuts, said stop-plate being in line with the projection on the carriage, substantially as described.

3. The combination in a spacing-table, of a carriage, a projection on the carriage, a screw-rod confined longitudinally on the table, with vertically-adjustable platforms for supporting the screw-rod between the ends, substantially as described.

4. The combination of a spacing-table, a carriage thereon, a projection on the carriage, a longitudinal screw-rod on the table and held at each end, nuts on the screw-rod, one or more platforms on the table between the ends of the screw-rod, and means for vertically adjusting said platforms, the nuts on the screw-rod resting on the platform so that the rod is supported by the platforms through the nuts, substantially as described.

5. The combination of a spacing-table, a carriage thereon, a projection on the carriage, a longitudinally-arranged screw-rod on the table, a series of nuts on the screw-rod, each nut having a circular periphery, and stop-plates mounted between each pair of nuts, with a bar directly under the screw-rod and supporting the nuts, substantially as described.

6. The combination of a spacing-table, a carriage thereon, a projection on the carriage, a longitudinally-arranged screw-rod having a series of nuts thereon, stop-plates held between a pair of these nuts, a bar directly under the portion of the screw-rod on which the nuts rest, and vertically-adjustable platforms upon which some of the nuts also rest, substantially as described.

7. The combination in a spacing-table, of a carriage, a projection thereon, a longitudinally-arranged screw-rod, nuts on the screw-rod, a bracket on the table having a socket, a platform having a stem mounted in the socket, the upper surface of the platform being recessed to receive the nuts, and a wedge extending across the socket and supporting the stem of the platform, substantially as described.

8. The combination in a spacing-table, of a carriage, a projection thereon, a screw-rod on the frame of the table, a pair of nuts mounted on the screw-rod, said nuts having reduced portions, a U-shaped plate extending between the nuts and resting on the reduced portions thereof, and a lug on the plate extending into a recess in one of the nuts, substantially as described.

In testimony whereof I have signed my name to this specification in the presence of two subscribing witnesses.

JAMES CHRISTIE.

Witnesses:
O. E. REINHARDT,
G. F. SPARHAWK.