US00D519310S

(12) **United States Design Patent** (10) **Patent No.: US D519,310 S**
Schorling (45) **Date of Patent: ** Apr. 25, 2006**

(54) **KIT FOR HANGING PANEL CURTAINS**

(75) Inventor: **Stefan Schorling**, Fellingsbro (SE)

(73) Assignee: **Hasta IP Holding AB**, Koping (SE)

(**) Term: **14 Years**

(21) Appl. No.: **29/220,210**

(22) Filed: **Dec. 28, 2004**

(51) **LOC (8) Cl.** **06-11**

(52) **U.S. Cl.** **D6/580**

(58) **Field of Classification Search** D8/367, D8/372, 376–377
See application file for complete search history.

(56) **References Cited**

U.S. PATENT DOCUMENTS

D432,004 S * 10/2000 Lopez D8/376
D436,025 S * 1/2001 Ohm et al. D8/376
D464,867 S * 10/2002 Samelson D8/367
D468,193 S * 1/2003 Ohm et al. D8/376
D478,271 S * 8/2003 McCoy et al. D8/376
D488,055 S * 4/2004 Ter Braak D8/377
D493,769 S * 8/2004 Kessler et al. D13/102

* cited by examiner

Primary Examiner—Holly H. Baynham
(74) *Attorney, Agent, or Firm*—Mark P. Stone

(57) **CLAIM**

The ornamental design for "a kit for hanging panel curtains," as shown and described.

DESCRIPTION

FIG. **1** is a perspective view of a snap support for a curtain rod illustrating one component of "a kit for hanging panel curtains" in accordance with my new design;
FIG. **2** shows an elevational view, in perspective of the right hand side of the curtain rod with hook attachment in accordance with my kit for hanging panel curtains;
FIG. **3** is a perspective view illustrating a portion of the top, and left end thereof; and,
FIG. **4** is a perspective view of a hanger for panel curtains in accordance with my "kit for hanging panel curtains".
FIG. **3** is shown fragmented for ease of illustration. FIGS. **1–4** depict elements of a kit for hanging panel curtains and are shown separately for convenient purposes only.

1 Claim, 1 Drawing Sheet

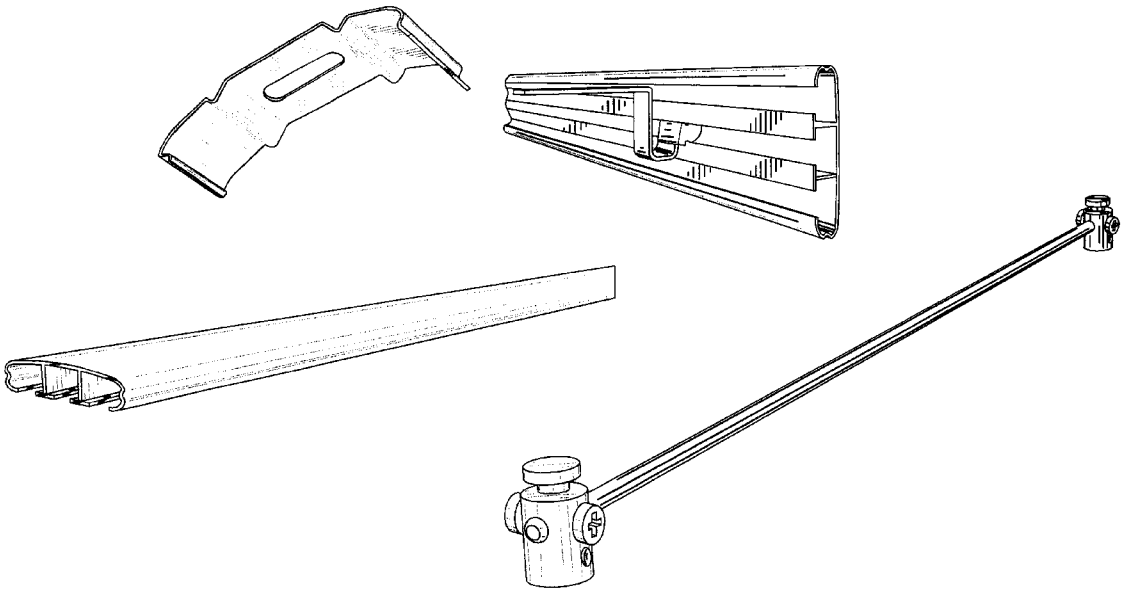

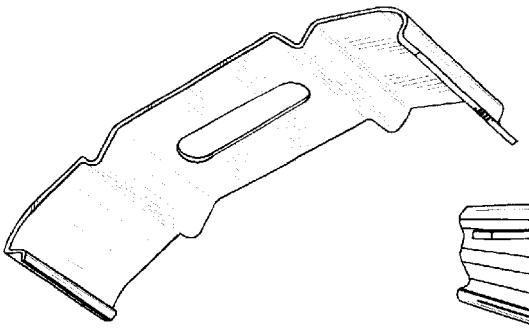

FIG. 1

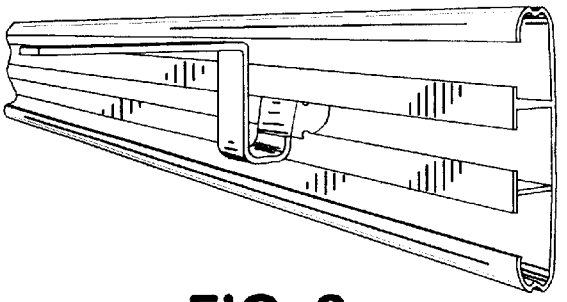

FIG. 2

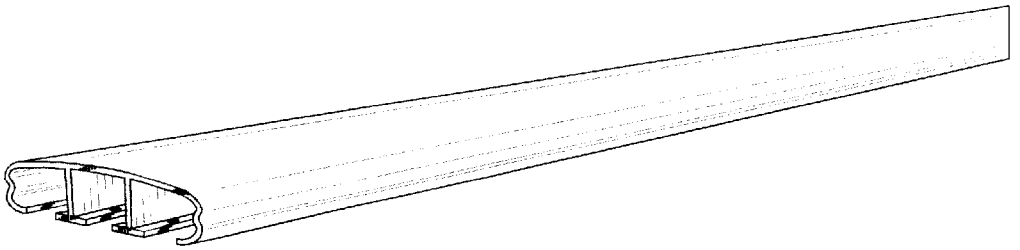

FIG. 3

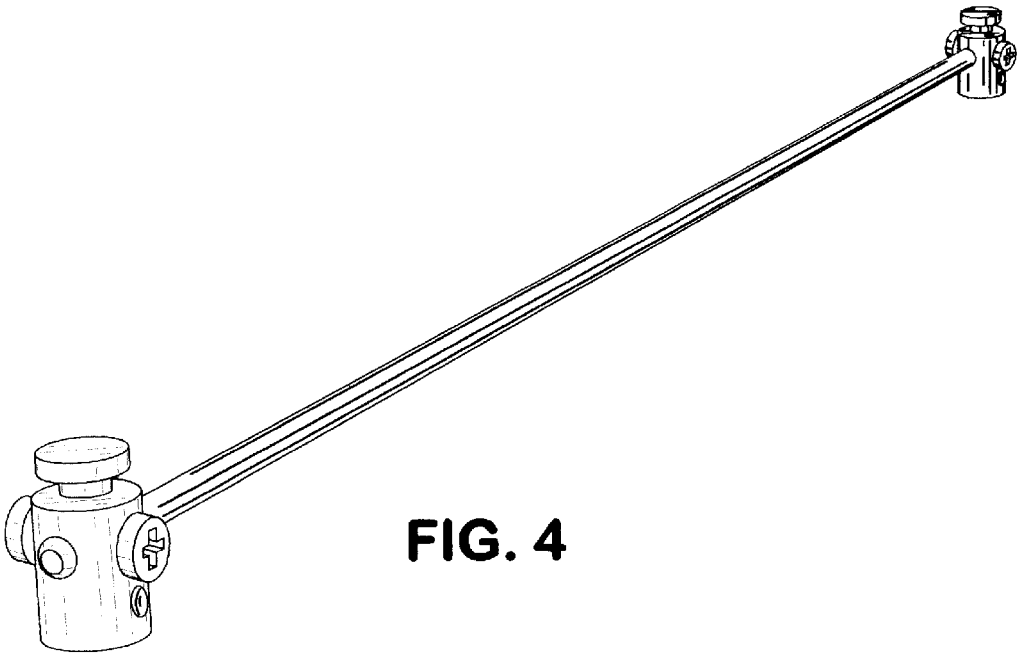

FIG. 4