(12) INTERNATIONAL APPLICATION PUBLISHED UNDER THE PATENT COOPERATION TREATY (PCT)

(19) World Intellectual Property Organization
International Bureau

(43) International Publication Date
21 July 2011 (21.07.2011)

PCT

(10) International Publication Number
WO 2011/087424 AI

(51) International Patent Classification:
B32B 21/08 (2006.01) *E04C 2/24* (2006.01)
B32B 38/14 (2006.01) *E04F 15/02* (2006.01)
B44C 5/04 (2006.01)

(21) International Application Number:
PCT/SE20 10/05 1475

(22) International Filing Date:
22 December 2010 (22.12.2010)

(25) Filing Language: English

(26) Publication Language: English

(30) Priority Data:
1050040-3 15 January 2010 (15.01 .2010) SE

(71) Applicant *(for all designated States except US):* **CERALOC INNOVATION BELGIUM BVBA** [BE/BE]; IT Tower, Avenue Louise 480, B-1050 Brussels (BE).

(72) Inventors; and
(75) Inventors/ Applicants *(for US only):* **ZIEGLER, Goran** [SE/SE]; Hasthovsvagen 11, S-260 40 Viken (SE). **LINDGREN, Kent** [SE/SE]; Alvagen 41, S-284 32 Perstorp (SE).

(74) Agent: **ENGSTRAND, Ola;** CeraLoc Innovation Belgium BVBA, Prastavagen 513, S-263 65 Viken (SE).

(81) Designated States *(unless otherwise indicated, for every kind of national protection available):* AE, AG, AL, AM, AO, AT, AU, AZ, BA, BB, BG, BH, BR, BW, BY, BZ, CA, CH, CL, CN, CO, CR, CU, CZ, DE, DK, DM, DO, DZ, EC, EE, EG, ES, FI, GB, GD, GE, GH, GM, GT, HN, HR, HU, ID, IL, IN, IS, JP, KE, KG, KM, KN, KP, KR, KZ, LA, LC, LK, LR, LS, LT, LU, LY, MA, MD, ME, MG, MK, MN, MW, MX, MY, MZ, NA, NG, NI, NO, NZ, OM, PE, PG, PH, PL, PT, RO, RS, RU, SC, SD, SE, SG, SK, SL, SM, ST, SV, SY, TH, TJ, TM, TN, TR, TT, TZ, UA, UG, US, UZ, VC, VN, ZA, ZM, ZW.

(84) Designated States *(unless otherwise indicated, for every kind of regional protection available):* ARIPO (BW, GH, GM, KE, LR, LS, MW, MZ, NA, SD, SL, SZ, TZ, UG, ZM, ZW), Eurasian (AM, AZ, BY, KG, KZ, MD, RU, TJ, TM), European (AL, AT, BE, BG, CH, CY, CZ, DE, DK, EE, ES, FI, FR, GB, GR, HR, HU, IE, IS, IT, LT, LU, LV, MC, MK, MT, NL, NO, PL, PT, RO, RS, SE, SI, SK, SM, TR), OAPI (BF, BJ, CF, CG, CI, CM, GA, GN, GQ, GW, ML, MR, NE, SN, TD, TG).

Declarations under Rule 4.17 :

[Continued on next page]

(54) Title: HEAT AND PRESSURE GENERATED DESIGN

Fig. 2

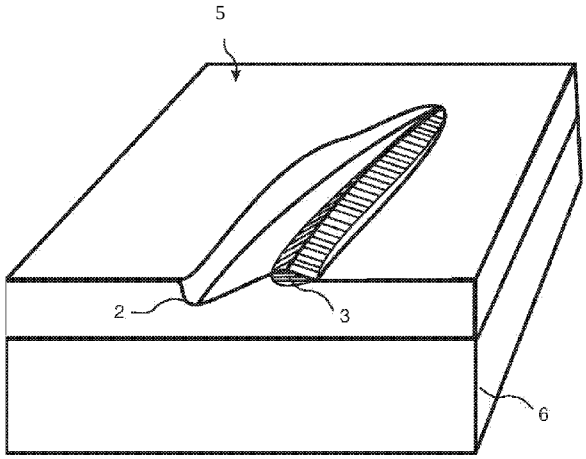

(57) Abstract: The disclosure relates to a wood fibre based panel with surfaces layer with lower parts which comprises less binders than the upper parts. Also disclosed is a method of manufacturing a building panel having a structured surface with a design that comprises colour variation in register with the structure obtained by a varying pressure distribution applied on the surface.

WO 2011/087424 A1

— *as to applicant's entitlement to apply for and be granted a patent (Rule 4.17(ii))*

Published.
— *with international search report (Art. 21(3))*

Heat and pressure generated design

Technical field

The disclosure generally relates to the field of fibre-based panels with wear resistant surfaces for building panels, preferably floor panels. The disclosure relates to building panels with such wear resistance surface and to production methods to produce such panels.

Background

Laminate flooring typically consists of layers of different materials that are compressed under heat to form a laminated board. The typical layers are an aluminium oxide containing melamine resin impregnated alfa cellulose paper, a melamine resin impregnated printed decorative paper, a wood fibre based carrier board (HDF) and a melamine resin impregnated balancing paper. Product designs are typically made by embossing the laminated product with a structured plate or paper during the press operation, and by printing the decorative paper with different designs and colours. At typical process conditions the depth of the structure is typically less than 0.2 mm in order to yield proper looking products. Deeper structures tend to give crazing of the surface due to insufficient pressure in parts of the board area and the limitation of stretching of the paper layers. In order to give an even more natural looking product, the printed paper and the embossed structure can be coordinated giving products that are known in the field as embossed in register (EIR).

Wood Fibre Floor (WFF) is a new type of flooring product, disclosed in WO2009/065769, that includes one or more layers of substantially homogenous powder mixtures that are heat compressed in processes akin to the processes used for making laminate floors. The homogenous powder mixtures typically include fibres such as wood fibres, polymer, such as melamine formaldehyde resin, hard particles, such as aluminium oxide particles and decorative materials, such as pigment particles, minerals and fibres. WFF products have a benefit over laminate floors as no papers with limited stretch capability are present, thus very deep structures can be made without yielding the observed crazing of the

surface. While under heated compression the WFF powder mixture is almost liquid like in the sense that the composition flows under pressure to fill out the crevices in the structure.

Summary of the invention

In WFF, just as in laminate flooring, it is of great interest to make natural looking products by having for example products that have colour variations matching the structure variation. It has surprisingly been found that such products can be obtained in WFF by heat and pressure variations, giving the possibility to tailor the design in a controlled manner. Several methods to control the design are disclosed below.

By applying a pressure with an uneven distribution over the surface of a layer and given a fluidity of the layer, when the pressure is applied, which is sufficiently high, it is possible to cause parts of the composition in the layer to be displaced to the desired location. The fluidity can be increased by, for example, increasing the amount of the binder in the surface layer. The binder is preferably a melamine resin but other resins and binders may also be used.

This makes it possible to create and control the colour variation and match it with structure variations.

Control by formulation - By controlling the composition of the WFF powder mixture, such as the amount and/or type of polymer resin, such as melamine resin, the fluidity of the composition can be controlled to give more or less pressure difference (and thus more or less displacement) in the different parts of the surface during heat compression. Compositions giving a low pressure difference over the surface cause the substantially homogenous powder mixture to stay substantially homogenous giving a homogenous colouration over the surface. Compositions giving a higher pressure difference restrict the bulk powder fluidity and the homogeneity of the mixture will then be broken as the more fluid parts of the composition partially flow away. The result is a gradient of composition over the surface area. Thus, a colour variation can be attained or avoided depending on the preference of the producer.

Other ways to change the fluidity of the composition is to alter the amount and/or type of fibre, use of processing aids such as plasticizers, solvents, reactive solvents and the like.

Control by heat - The typical WFF formulation consists partially of wood fibres. Such wood fibres are prone to darkening upon heating. By applying more or less heat over the surface the colouration can be controlled.

Control by pressure - Controlling the applied pressure in the heat-compressed state can also control the colour difference. At higher pressure the bulk powder fluidity is restricted so the homogeneity of the powder mixture will be broken as described above to give a gradient in composition over the surface area.

Control by press plate design - By optimizing the surface area of the structure plate or paper, increased and/or decreased flow can be controlled, thus aiding in the control of colour difference over the surface area.

Control by scattering, heterogeneous scattering - WFF powder can be scattered in a heterogeneous (nonuniform) way in order to provoke pressure difference over the surface area when the product is heat compressed. This can be sought after to make a local reinforcement such as in the parts of the board in which a locking element can be positioned. In such a case, the mechanical, chemical and water resistance can be optimized in the areas of the locking system that can be subjected to moisture, cleaning agents and mechanical wear.

Heterogeneous scattering can also be made to follow the structure of the embossing plate or paper. In this case, the pressure difference can be matched to yield a product having an equal amount of material over the surface area giving equally good product properties and appearance over the surface.

Heterogeneous scattering can be used to enrich the amount of material in the protruding parts of the structure, so as to make increased chemical and mechanical properties in those parts of the surface that are subjected to the most stress from walking and cleaning.

Heterogeneous scattering can also be used to introduce differences in pressure over the area during heat compressing in excess of what is granted from the structure of the press plate or paper. In this case, depending on the control of the bulk fluidity of the powder mixture, colour variation can be controlled.

By employing more than one powder mixture the heterogeneous scattering can have a specific formulation tailored for the application. If a protruding part should be protected, this part can be richer in resins and wear particles compared to the bulk of the product, thus saving cost of the formulation. If water resistance of a locking system area should be optimized a more hydrophobic powder mixture can be used. If a specific decorative effect is sought, the powder fluidity can be optimized to give big colour variation. Choice of pigment or other design material in the heterogeneous scattering can also be used.

Control by mechanical design - Removal or surface mixing of part of the scattered powder layer by means of blowing, sucking, brushing, scraping, cutting or equivalent are also means to introduce difference of pressure over the area during heat compression. In this case, similar effects of colour variation due to pressure differences can be obtained as described above for heterogonous scattering. In the case of two or more powder layers being scattered on the surface, the effect of the partial removal or mixing can be further enhanced by, for example, differences in composition of the powder layers. A local mixing, micro mixing, of powders will cause a gradient in colourations that is further enhanced by the provoked pressure difference giving a further gradient in shading of the differently coloured surface. The result is a possibility to make very complex colour variations over the surface.

Partial removal or surface mixing as well as inhomogeneous scattering can easily be made using robots in order to either make the design actions in a controlled or uncontrolled way so as to give either identical or individual designs.

The control methods above can be used to tailor the properties of the product. As an example, an increased wear resistance might be desired on parts of the surface.

A first aspect of the invention is a building panel comprising a decorative surface layer 5 connected to a core 6. The surface layer is a mix comprising fibres 14, colour substance preferably colour pigments, a binder and wear resistant particles 12. Furthermore the surface layer comprises lower parts and upper parts and there is preferably a binder concentration gradient between the lower

parts and upper parts. In a preferred embodiment the lower parts comprise less binder than the upper parts. The binder is in a preferred embodiment a resin.

A reversed condition could also be used. Having higher binder content in the lower part gives a gradient of flow to both the board and the upper part that can make it possible to have a saturated surface area between the board and the lower part.

The surface layer preferably has a substantially homogenous distribution of the wear resistant particles throughout the thickness of the layer and wear resistant particles are present from the bottom, and thereby in contact with the core, to the top.

The surface layer may in one embodiment comprise a sub layer and a top layer. The sub layer may not include wear resistant particles and colour pigments. In this case the sub layer can be considered as a scattered core.

Preferred embodiments of the first aspect of the invention are disclosed under Detailed Description of Embodiments and in the dependent product claims below.

A second aspect of the invention is a method of manufacturing a building panel having a structured surface with a design that comprises colour variation in register with the structure whereby the method comprises the steps of:

- applying a layer comprising a mix of fibres, binder, preferably a resin, wear resistant particles and a colour substance preferably colour pigments, on a carrier wherein the mix is floatable under heat and pressure
- applying heat and pressure on the mix by a structured matrix comprising protrusions and cavities such that a controlled floating of the mix is obtained by the varying pressure distribution applied on the surface. In a preferred embodiment the resin content in the layer is adapted to the pressure such that a sufficient floating is obtained and preferably the binder is a resin and the weight content of the resin is at least 40% of the layer.

In order to increase the fluidity, the mass ratio between the binder and the fibres is preferably in the range of about 130-240%, more preferably in the range of 150-220%, most preferably in the range of about 180-200%. In the most preferred embodiment the mass ratio between the binder and the fibres is about 190%.

Preferred embodiments of the second aspect of the invention are disclosed under Detailed Description of Embodiments and in the dependent method claims below.

In order to increase the releasability, i.e., the ability to be released from and not stick to the press plate, a mass ratio between resins and the sum of the masses of the fibres and the colouring substances is preferably higher than about 60 %, more preferably higher than about 100 % and most preferably in the range of about 100 - 130%.

The layer in the method preferably has a substantially homogenous distribution of the wear resistant particles throughout the thickness of the layer and wear resistant particles are present from the bottom, and thereby in contact with the carrier, to the top.

Another aspect of the invention is to use the principles and control methods above to create a surface with even colour distribution and/or properties. In this case a layer with a fluidity, when the pressure is applied is used, that is sufficiently low, to maintain the substantially homogenous mix or substantially homogenous mix and distribution of the component in the layer. Such low fluidity can be obtained by having certain ratios between resins, fibres and pigments. One ratio could be calculated through dividing the mass of resins and the mass of fibres, this ratio is preferably less than about 90% and even more preferably less than about 80%. Another ratio could be between the mass of resins and the sum of the mass of fibres and the mass of colouring substances; this ratio is preferably higher than about 60% and in a preferred range of about 100-130%.

Brief Description of the Drawings

The following disclosure will be described in connection to preferred embodiments and in greater detail with reference to the appended exemplary drawings, wherein

Fig 1 Illustrate a Wood Fibre Floor panel, and

Fig 2 Illustrate a Wood Fibre Floor panel with registered embossing according to one embodiment of the invention.

Detailed Description of Embodiments

Figure 1 shows a Wood Fibre Floor (WFF) panel of the type disclosed in WO2009/065769, where the surface layer 5 has been formed on a core 6 that has been produced in a prior separate operation, for example a HDF panel. The surface layer comprises wood fibres 14, wear resistance particles 12 and a binder. The surface layer may in one embodiment comprise a sub layer and a top layer. This sub layer could be produced in the same way as the top layer and the same material compositions could be used except for the fact that in some embodiments wear resistant particles and colour pigments are not included. In this case the sub layer can be considered as a scattered core.

Figure 2 shows one embodiment of a Wood Fibre Floor (WFF) panel according to the invention with colour variation 3 in register with the structure 2 of the surface layer 5.

Preferably the same scattering and pressing units as disclosed in WO2009/065769 are used preferably together with a structured press plate in the method according to the invention. The panels according to the invention are preferably produced by this method.

In order to illustrate the effects of the parameters used in the control methods above, some examples are given below.

Examples 1-3 show the effect of changing the composition. Example 4 shows comparing with example 1 the effect of changing the pressure. The surface layer in Examples 1-4 is scattered in one layer. In Examples 5-6 the surface layer comprises a sub layer and a top layer. The surface layer is in all examples scattered on a HDF panel. Aluminium oxide is used as the wear resistant particles in all examples and the colouring substance is a pigment of Titanium Dioxide or combinations of Titanium Dioxide and Carbon Black.

Example 1: High Structure, Normal pressure

Scattered amount: 600 g/m2

Carrier board: 8 mm HDF

Backing: 2 layers of NKR 140

Structure plate: 0.7 mm Slate Structure

Pressure: 45 kg/cm2,

Contact time: 25 sec

Press plate temperature: 160°C

One Surface layer - Scattered homogenously

Component	Wt-%
Melamine Formaldehyde resin	33
Wood Fibre	43
Wear Resistant Particles: Aluminium Oxide	13
Colouring Substance: Titanium Dioxide	11
Sum	100

The mass ratio between Melamine Formaldehyde Resin and dry components (Wood Fibre, Colouring Substance) is equal to 61 %.

The mass ratio between Melamine Formaldehyde Resin and Wood Fibre is equal to 77 %.

The resulting product is a homogenous off white product.

Example 2: High Structure, Normal pressure

Scattered amount: 600 g/m2

Carrier board: 8 mm HDF

Backing: 2 layers of NKR 140

Structure plate: 0.7 mm Slate Structure

Pressure: 45 kg/cm2,

Contact time: 25 sec

Press plate temperature: 160°C

One Surface layer - Scattered homogenously

Component	Wt-%
Melamine Formaldehyde resin	47
Wood Fibre	25
Wear Resistant Particles: Aluminium Oxide	17
Colouring Substance: Titanium Dioxide	11
Sum	100

The mass ratio between Melamine Formaldehyde Resin and dry components (Wood Fibre, Colouring Substance) is equal to 131 %.

The mass ratio between Melamine Formaldehyde Resin and Wood Fibre is equal to 188 %.

The resulting product is a substantially homogenous off white product with some whiter spots at the ridges of the embossed structure.

Example 3: High Structure, Normal pressure

Scattered amount: 600 g/m2

Carrier board: 8 mm HDF

Backing: 2 layers of NKR 140

Structure plate: 0.7 mm Slate Structure

Pressure: 45 kg/cm2,

Contact time: 25 sec

Press plate temperature: 160°C

One Surface layer - Scattered homogenously

Component	Wt-%
Melamine Formaldehyde resin	65

Wood Fibre	17
Wear Resistant Particles: Aluminium Oxide	11
Colouring Substance: Titanium Dioxide	7
Sum	100

The mass ratio between Melamine Formaldehyde Resin and dry components (Wood Fibre, Colouring Substance) is equal to 271 %.

The mass ratio between Melamine Formaldehyde Resin and Wood Fibre is equal to 382 %.

The resulting product is a substantially homogenous off white product with many whiter spots at the ridges of the embossed structure.

Example 4: High Structure, High pressure

Scattered amount: 600 g/m2

Carrier board: 8 mm HDF

Backing: 2 layers of NKR 140

Structure plate: 0.7 mm Slate Structure

Pressure: 60 kg/cm2,

Contact time: 25 sec

Press plate temperature: 160°C

One Surface layer - Scattered homogenously.

Component	Wt-%
Melamine Formaldehyde resin	47
Wood Fibre	25
Wear Resistant Particles: Aluminium Oxide	17
Colouring Substance: Titanium Dioxide	11
Sum	100

The resulting product is a substantially homogenous off white product with many whiter spots at the ridges of the embossed structure.

The mass ratio between Melamine Formaldehyde Resin and dry components (Wood Fibre, Colouring Substance) is equal to 131 %.

The mass ratio between Melamine Formaldehyde Resin and Wood Fibre is equal to 188 %.

Example 5: Heterogeneous scattering

Scattered amount: 300+300 g/m2

Carrier board: 8 mm HDF

Backing: 2 layers of NKR 140

Structure plate: 0.7 mm Slate Structure

Pressure: 45 kg/cm2,

Contact time: 25 sec

Press plate temperature: 160°C

Sub layer formulation - Scattered homogenously.

Component	Wt-%
Melamine Formaldehyde resin	42,2
Wood Fibre	28,2
Wear Resistant Particles: Aluminium Oxide	25,8
Colouring Substance: Titanium Dioxide	3,5
Colouring Substance: Carbon Black	0,3
Sum	100

The mass ratio between Melamine Formaldehyde Resin and dry components (Wood Fibre, Colouring Substance) is equal to 132 %.

The mass ratio between Melamine Formaldehyde Resin and Wood Fibre is equal to 150 %.

Top Layer Formulation - Scattered through a shablon.

Component	Wt-%
Melamine Formaldehyde resin	49,5
Wood Fibre	40
Wear Resistant Particles: Aluminium Oxide	10
Colouring Substance: Carbon Black	0,5
Sum	100

The mass ratio between Melamine Formaldehyde Resin and dry components (Wood Fibre, Colouring Substance) is equal to 122 %.

The mass ratio between Melamine Formaldehyde Resin and Wood Fibre is equal to 124 %.

The resulting product is a dark grey product with a black pattern. In the more deeper embossed regions the black colour is more intense compared to the more shallow regions.

Example 6: Mechanical design

Scattered amount: 300 g/m2 Sub layer+300 g/m2 Top Layer

Carrier board: 8 mm HDF

Backing: 2 layers of NKR 140

Structure plate: 0.7 mm Slate Structure

Pressure: 60 kg/cm2,

Contact time: 25 sec

Press plate temperature: 160°C

Sub layer formulation - Scattered homogenously.

Component	Wt-%
Melamine Formaldehyde resin	47,5

Wood Fibre	24,5
Wear Resistant Particles: Aluminium Oxide	17,5
Colouring Substance: Titanium Dioxide	10,5
Sum	100

The mass ratio between Melamine Formaldehyde Resin and dry components (Wood Fibre, Colouring Substance) is equal to 136 %.

The mass ratio between Melamine Formaldehyde Resin and Wood Fibre is equal to 194 %.

Top Layer Formulation - Scattered homogenously.

Component	Wt-%
Melamine Formaldehyde resin	49,5
Wood Fibre	40
Wear Resistant Particles: Aluminium Oxide	10
Colouring Substance: Carbon Black	0,5
Sum	100

The mass ratio between Melamine Formaldehyde Resin and dry components (Wood Fibre, Colouring Substance) is equal to 122 %.

The mass ratio between Melamine Formaldehyde Resin and Wood Fibre is equal to 124 %.

After scattering of the sub layer and the top layer, a robot scratched the surface in a programmed way to remove part of the top layer.

The resulting product is a black surface having a grey-white decoration according to the action of the robot.

CLAIMS

1. A method of manufacturing a building panel having a structured surface with a design that comprises colour variation (3) in register with the structure (2) whereby the method comprises the steps of:
   - applying a layer comprising a mix of fibres, binder, wear resistant particles, preferably of aluminium oxide, and a colouring substance, preferably colour pigments, on a carrier wherein the mix is floatable under heat and pressure
   - applying heat and pressure on the mix by a structured matrix comprising protrusions and cavities such that a controlled floating of the mix is obtained by the varying pressure distribution applied on the surface.
2. The method according to claim 1 wherein the binder content in the layer is adapted to the pressure such that a sufficient floating is obtained.
3. The method according to claim 1 or 2 wherein the binder is a resin.
4. The method according to claim 1 or 2 wherein the binder is a resin and the weight content of the resin is at least 40% of the layer.
5. The method according to any one of the proceeding claims wherein the mass ratio between resins and fibres is in the range of about 130-240%, preferably in the range of 150-220%, most preferably in the range of about 180-200%.
6. The method according to any one of the proceeding claims wherein the mass ratio between resins and fibres is about 190%.
7. The method according to any one of the proceeding claims wherein the mass ratio between binder and the sum of the masses of the fibres and the colouring substances is higher than about 60 %, preferably higher than about 100 % and most preferably in the range of about 100-130%.

8. The method according to any one of the proceeding claims wherein the applied temperature is higher than about 150°C and the applied pressure is more than about 30 bar.

9. The method according to any one of the proceeding claims wherein the layer comprises a top-layer and a sub-layer having different colour pigments which are mixed by the floating.

10. The method according to any one of the proceeding claims, wherein the panel is a floor panel.

11. The method according to any one of the proceeding claims, wherein the carrier is a wood based core.

12. A building panel comprising a decorative surface layer (5) connected to a core (6) wherein the surface layer is a mix comprising fibres (14), colouring substance preferably colour pigments (15), a binder (19) and wear resistant particles (12), preferably of aluminium oxide, and wherein the surface layer comprises lower parts and upper parts characterized in that the there is a binder concentration gradient between the lower parts and upper parts

13. The building panel according to claim 12 wherein the lower parts comprises less binder than the upper parts.

14. The building panel according to claim 12 wherein the upper parts comprises less binder than the lower parts.

15. The building panel according to any one of the claims 12-14, wherein the binder is a melamine resin.

16. The building panel according to any of the preceding claims 12-15, wherein the fibres are wood fibres.

17. The building panel according to any of the preceding claims 12-16, wherein the panel is floor panel

18. The building panel according to any one of the claims 12- 17 produced by the method according to any of the claims 1-11

19. A method of manufacturing a building panel having plain coloured surface whereby the method comprises the steps of:

- applying a layer comprising a mix of fibres, binder, wear resistant particles, preferably of aluminium oxide, and a colouring substance, preferably colour pigments, on a carrier wherein the mix is floatable under heat and pressure
- applying heat and pressure on the mix
- the mass ratio between resins and fibres is less than about 90% and even more preferably less than about 80%.

20. The method of manufacturing a building panel according to claim 19 wherein the mass ratio between the binder and the sum of the masses of the fibres and the colouring substances is higher than about 60% and in a preferred range of about 100-1 30%.

21. A method of manufacturing a building panel having plain coloured surface whereby the method comprises the steps of:

- applying a layer comprising a mix of fibres, binder, wear resistant particles, preferably of aluminium oxide, and a colouring substance, preferably colour pigments, on a carrier wherein the mix is floatable under heat and pressure
- applying heat and pressure on the mix
- the mass ratio between the binder and the sum of the masses of the fibres and the colouring substances is higher than about 60% and in a preferred range of about 100-1 30%.

22. The method according to any one of the claims 19 - 21 wherein the binder is a resin.

23. A building panel produced according to the method in any one of the claims 19-22.

Fig. 1

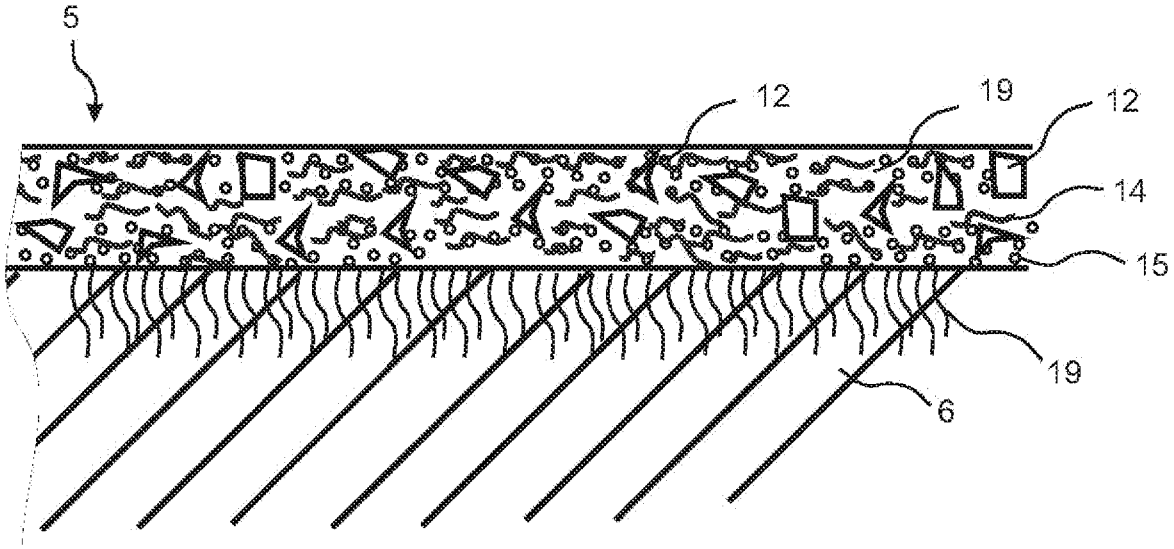

Fig. 2

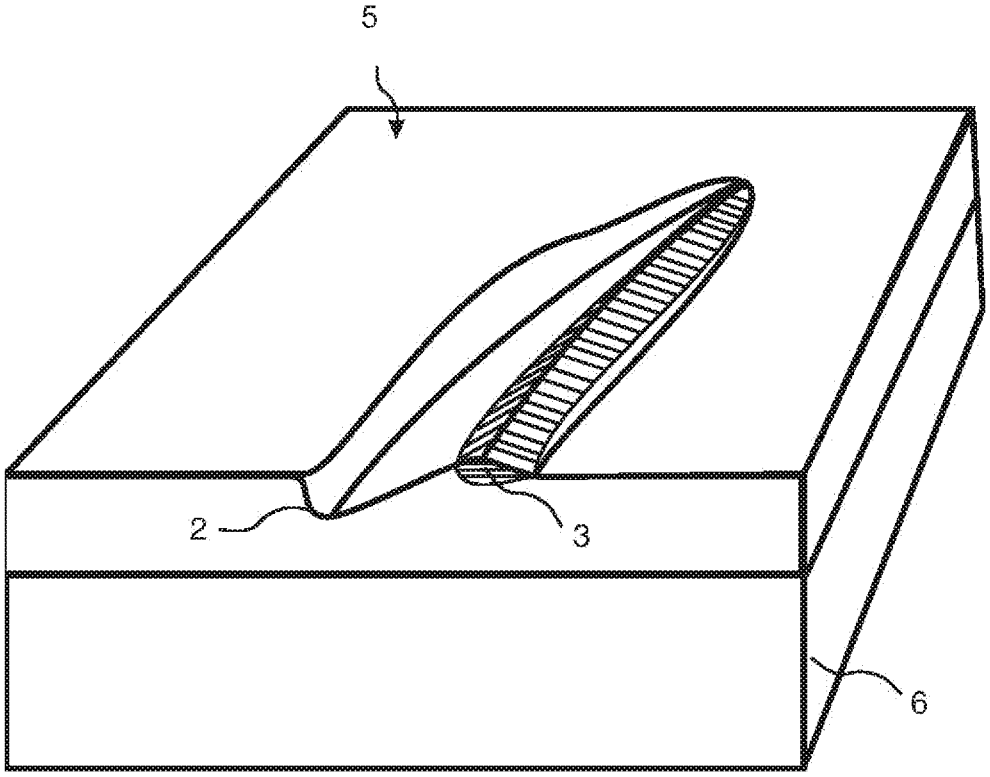

INTERNATIONAL SEARCH REPORT

International application No.
PCT/SE2010/051475

A. CLASSIFICATION OF SUBJECT MATTER

IPC: see extra sheet
According to International Patent Classification (IPC) or to both national classification and IPC

B. FIELDS SEARCHED

Minimum documentation searched (classification system followed by classification symbols)

IPC: B32B, B44C, E04C, E04F

Documentation searched other than minimum documentation to the extent that such documents are included in the fields searched

SE,DK,FI,NO classes as above

Electronic data base consulted during the international search (name of data base and, where practicable, search terms used)

EPO-INTERNAL, WPI DATA, PAJ

C. DOCUMENTS CONSIDERED TO BE RELEVANT

Category'	Citation of document, with indication, where appropriate, of the relevant passages	Relevant to claim No.
X	US 4093766 A (SCHER, HERBERT I. ET AL), 6 June 1978 (06.06.1978), see claim 1 --	1-23
X	US 5601930 A (MEHTA, MAHENDRA ET AL), 11 February 1997 (11.02.1997), see column 1 and 2 -- --------	12-17

☐ Further documents are listed in the continuation of Box C. ☒ See patent family annex.

* Special categories of cited documents:
"A" document defining the general state of the art which is not considered to be of particular relevance
"E" earlier application or patent but published on or after the international filing date
"L" document which may throw doubts on priority claim(s) or which is cited to establish the publication date of another citation or other special reason (as specified)
"O" document referring to an oral disclosure, use, exhibition or other means
"P" document published prior to the international filing date but later than the priority date claimed
"T" later document published after the international filing date or priority date and not in conflict with the application but cited to understand the principle or theory underlying the invention
"X" document of particular relevance: the claimed invention cannot be considered novel or cannot be considered to involve an inventive step when the document is taken alone
"Y" document of particular relevance: the claimed invention cannot be considered to involve an inventive step when the document is combined with one or more other such documents, such combination being obvious to a person skilled in the art
"&" document member of the same patent family

Date of the actual completion of the international search	Date of mailing of the international search report
20 April 2011	26 April 2011
Name and mailing address of the ISA/ Swedish Patent Office Box 5055, S-102 42 STOCKHOLM Facsimile No. + 46 8 666 02 86	**Authorized officer** Erika Stenroos / Eo Telephone No. + 46 8 782 25 00

International patent classification (IPC)
B32B 21/08 (2006.01)
B32B 38/14 (2006.01)
B44C 5/04 (2006.01)
E04C 2/24 (2006.01)
E04F 15/02 (2006.01)

Download your patent documents at www.prv.se
The cited patent documents can be downloaded:

- From "Cited documents" found under our online services at www. prv. se (English version)
- From "Anforda dokument" found under "e-tjanster" at www .prv .se (Swedish version)

Use the application number as username. The password is **ZVDXSAIFAG.**

Paper copies can be ordered at a cost of 50 SEK per copy from PRV InterPat (telephone number 08-782 28 85) .

Cited literature, if any, will be enclosed in paper form.

US	4093766	A	06/06/1978	DE	2630613	A.B.C	26/11/1981
				IT	1064673	B	25/02/1985
				JP	52009062	A	24/01/1977
US	5601930	A	11/02/1997	NONE			